MORRIS

MINOR

Series MM, Series II, and 1000

WORKSHOP MANUAL

Publication Part No. AKD 530 (14th Edition)

British Leyland (Austin-Morris) Limited
Service division, Cowley, Oxford, England

Telephone: Oxford (STD 0865) 78941

FOREWORD

This Manual has been prepared to provide the service operator with the necessary information for maintenance and repair; it also serves as a reference book for service supervision and covers items of procedure for the guidance of both the fully qualified and the less-experienced mechanic.

Page 3, 'CONTENTS', serves as an index to the Sections, which can then be located quickly by thumbing the top right-hand corner of the Manual to locate the Section by the large reference letters included in the margin of each page.

MORRIS MINOR (Series MM)

Use the Sections as indicated in 'CONTENTS' on page 3.

MORRIS MINOR (Series II)

Use the Sections as indicated in 'CONTENTS' on page 3. Information on components which were also fitted to the Series MM model has not been repeated and will be found in the Series MM Sections of the Manual.

MORRIS MINOR 1000

Use the Sections as indicated in 'CONTENTS' on page 3. Information on components which were also fitted to the Series MM or Series II model has not been repeated and will be found in the Series MM or Series II Sections of the Manual.

MAINTENANCE

The maintenance items within the Sections should be carried out at the intervals specified in the Driver's Handbook, Passport to Service, or Maintenance Voucher Book.

CONTENTS

THE MORRIS MINOR (Series MM)

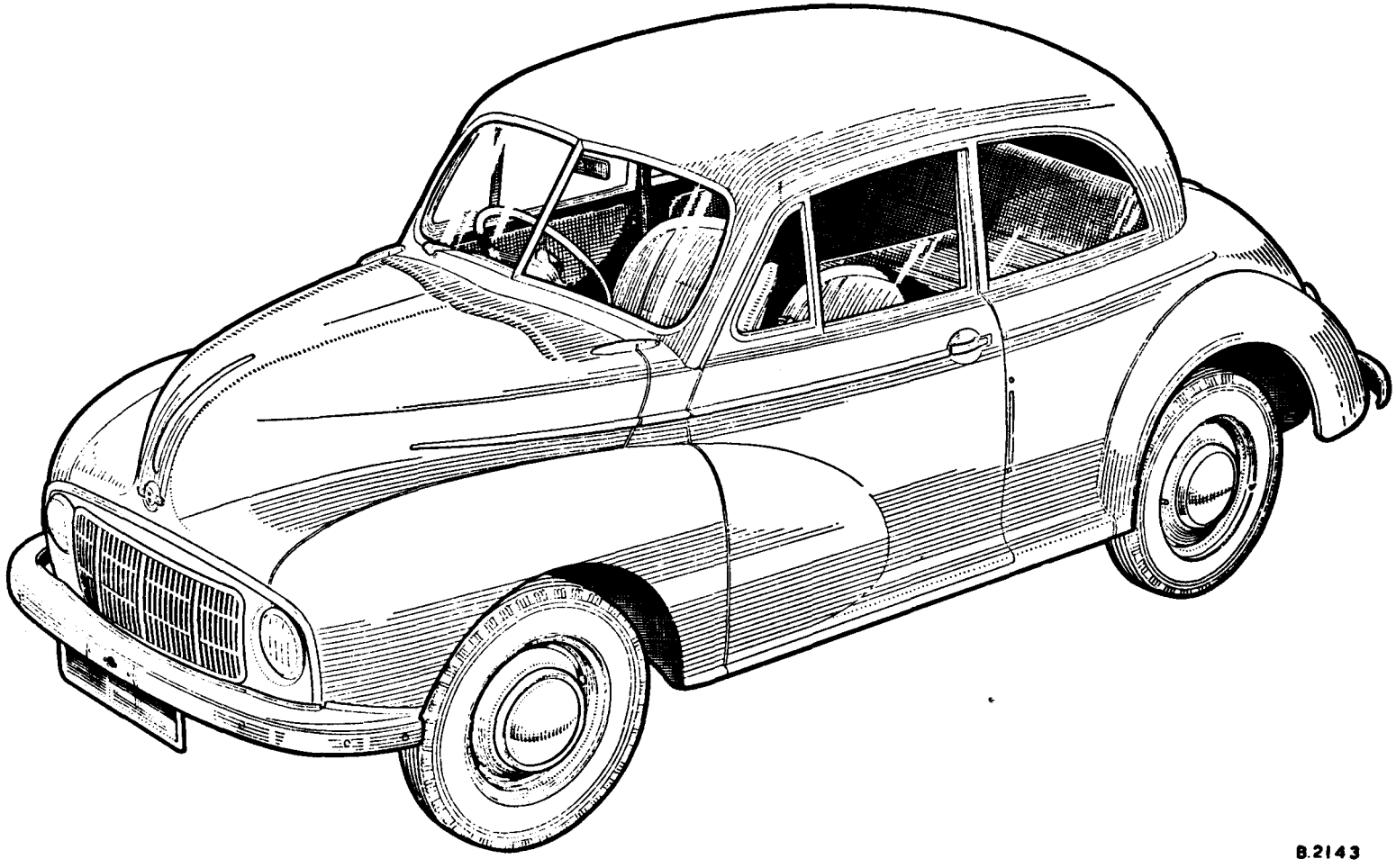

TWO-DOOR SALOON

THE MORRIS MINOR (Series II)

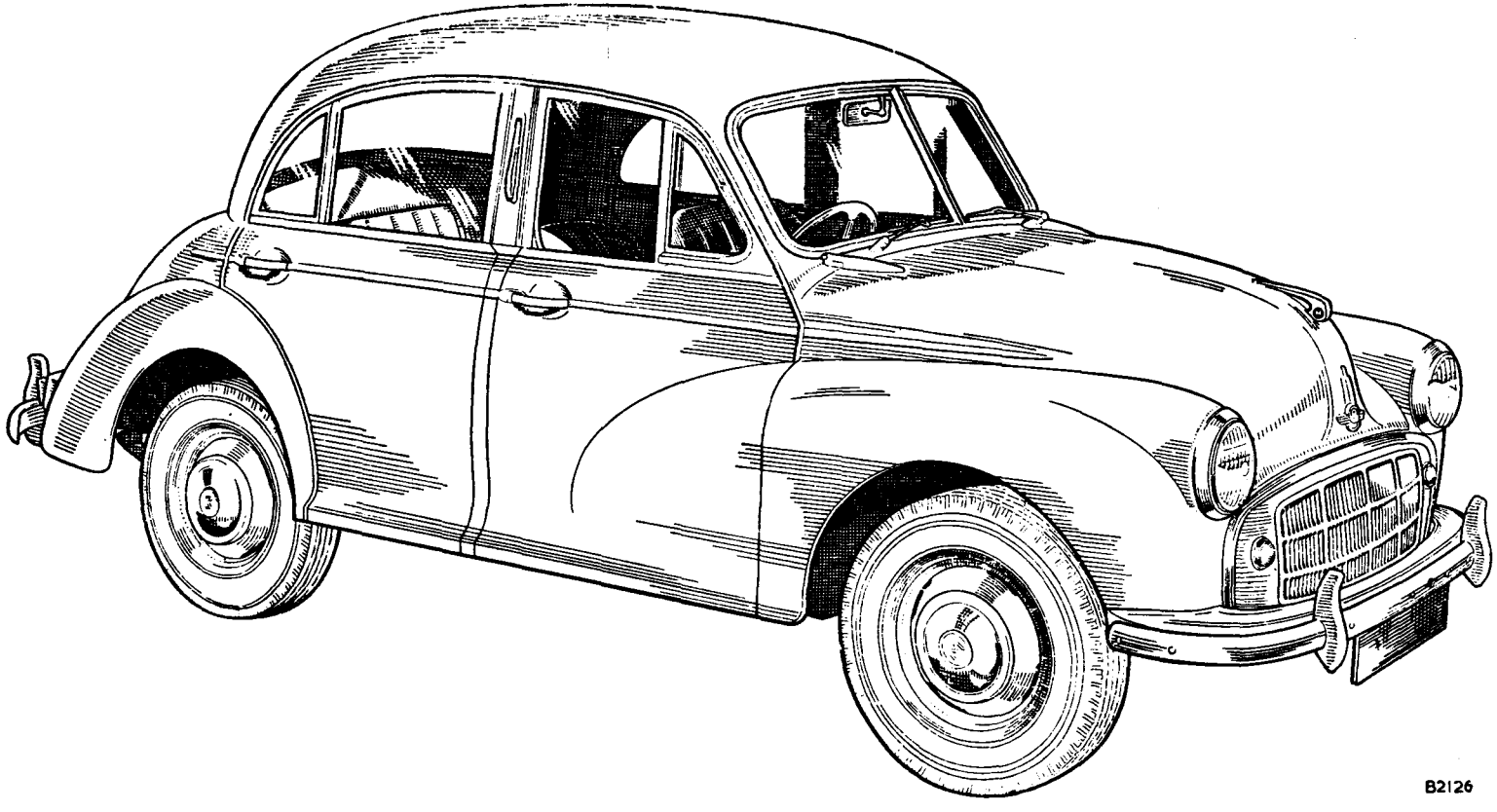

FOUR-DOOR SALOON

THE MORRIS MINOR 1000

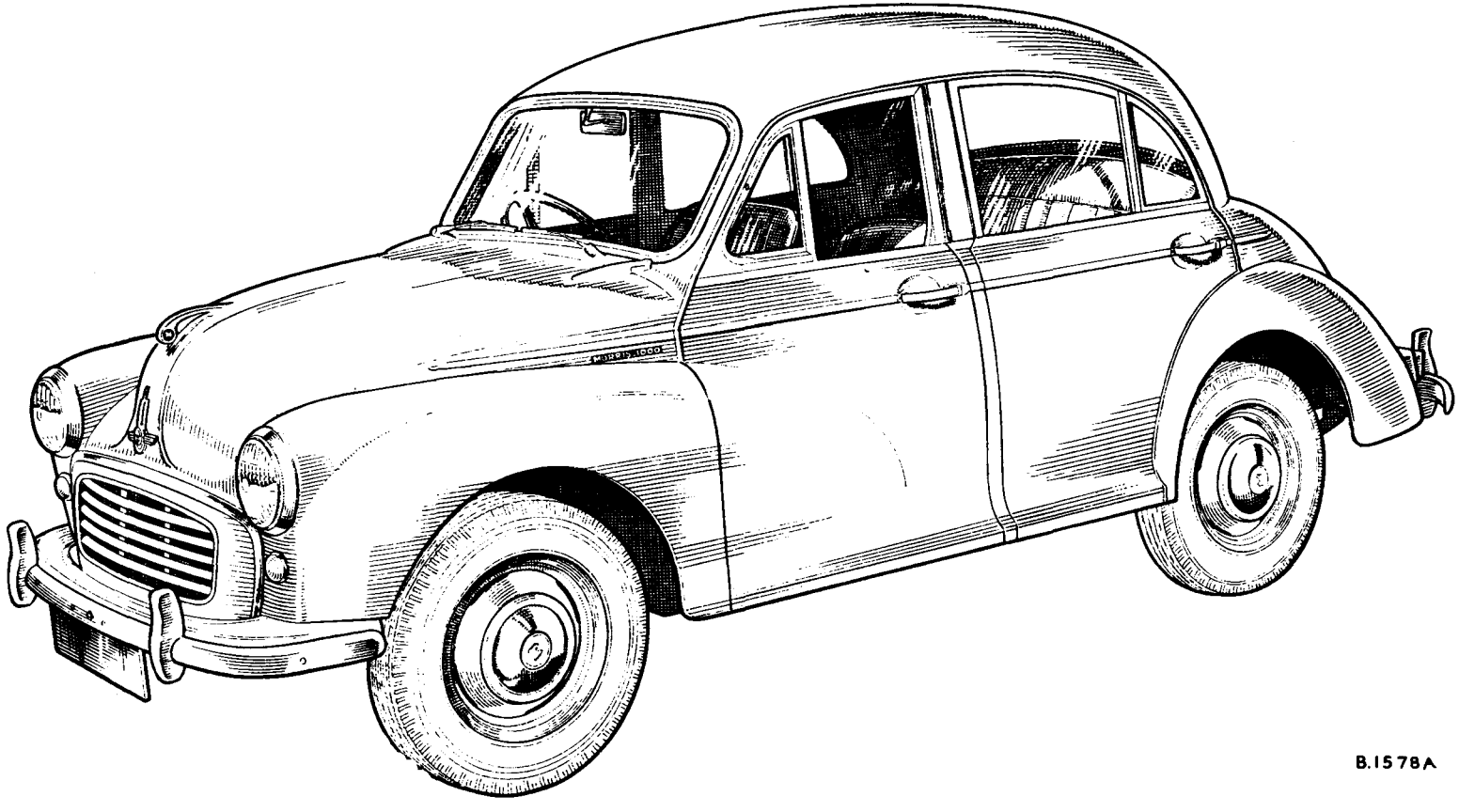

FOUR-DOOR SALOON

GENERAL DATA

ENGINE USHM2

Number of cylinders	4.
Cubic capacity	918·636 c.c. (56·06 cu. in.).
Bore	57 mm. (2·244 in.).
Stroke	90 mm. (3·543 in.).
Compression ratio	6·5/6·7 : 1.
System of cooling	Thermo-siphon and fan.
Radiator hose: Top	(Special) $4\frac{3}{4}$ in. × $1\frac{5}{8}$ in. (inside dia.) (12 cm. × 41·3 mm.).
Bottom	3 in. × $1\frac{5}{8}$ in. (inside dia.) (7·6 cm. × 41·3 mm.).
First oversize bore	+·020 in. (·50 mm.). Actual bore 57·5 mm. (2·264 in.).
Maximum oversize for boring	+·040 in. (1·01 mm.). Actual bore 58·0 mm. (2·284 in.).
Firing order	1, 3, 4, 2.
Piston clearance: Top	·06 mm. (·002 in.).
Bottom	·06 mm. (·002 in.).
Ring gap	·0025 to ·0065 in. (·06 to ·17 mm.).
Number of compression rings	2.
Width of compression rings	2·23 mm. (·088 in.).
Number of oil rings	1.
Width of oil ring	2·96 mm. (·116 in.).
Oil pressure relief valve operates	60 lb./sq. in. (4·2 kg./cm.^{2}).
Gudgeon pin: Type	Semi-floating.
Diameter	15 mm. ± ·005 mm. (·591 in.).
Fit in piston	Floating.
Fit in connecting rod	Clamped.
Crankpin: Length	27 mm. (1·063 in.).
Diameter (standard)	40 mm. (1·575 in.).
Minimum diameter after regrind	38·984 mm. (1·535 in.).
Connecting rod: Length between centres	165 mm. (6·496 in.).
Type of bearing	Shimless, steel-backed, white-metal-lined.
Side-clearance	·100 to ·150 mm. (·004 to ·006 in.).
Diametral clearance	Normal ·001 in. (·025 mm.), max. ·002 in. (·050 mm.).
Number of crankshaft bearings	3.
Type of main bearings	Shimless, steel-backed, white-metal-lined.
Standard main journal diameter	42 mm. (1·654 in.).
Main journals—minimum diameter after regrind	40·984 mm. (1·614 in.).
Main bearings: Length	Front 32 mm. (1·26 in.). Centre 35 mm. (1·378 in.). Rear 32 mm. (1·26 in.).
End-clearance	·0013 to ·0037 in. (·03 to ·09 mm.).
Diametral clearance	Normal ·001 in. (·025 mm.), max. ·003 in. (·075 mm.).
Crankshaft—end-thrust taken on	Centre main bearing.
Number of camshaft bearings	3.
Type of camshaft bearings	Plain (running in block).
Camshaft: Bearing clearance	·002 to ·004 in. (·05 to ·10 mm.).
End-thrust taken on	Front end on spring plate riveted to chain case.
Drive (type)	Chain (duplex roller).
Camshaft chain: Pitch	$\frac{3}{8}$ in. (9·52 mm.).
Number of links	50.
Valve timing markings	'T' mark on teeth and bright links on chain. Pointer on chain case and groove in crankshaft pulley.
Exhaust valve: Throat diameter	25 mm. (·984 in.).
Diameter	Head 28 mm. (1·102 in.), stem 7 mm. (·276 in.).

Inlet valve: Throat diameter	·984 in. (25 mm.).
Diameter	Head 1·102 in. (28 mm.), stem ·276 in. (7 mm.).
Valve seat angle	45°.
Tappet type	Hollow chill cast.
Inlet valve clearance for timing	·023 in. (·58 mm.) for inlet to open at T.D.C. when cold.
Valve lift: Inlet	·256 in. (6·5 mm.).
Exhaust	·260 in. (6·6 mm.).
Inlet valve: Opens	8° B.T.D.C.
Closes	52° A.B.D.C.
Exhaust valve: Opens	52° B.B.D.C.
Closes	20° A.T.D.C.
Valve spring: Valve shut	19 lb. (8·62 kg.).
Valve open	37 lb. (16·78 kg.).
Inlet valve opens—piston traverse	·022 in. B.T.D.C. (·557 mm.).
Valve working clearance	·018 in. (·46 mm.) cold.
Valve guides	Removable.

FUEL SYSTEM

Petrol tank level	Recorded by electric gauge on instrument panel.
Fuel delivery	S.U. electric pump, Type L. Pressure ¾ to 1 lb./sq. in. (·05 to ·07 kg./cm.²).
Carburetter	S.U. horizontal, Type H1.
Carburetter needles	EK (standard). M9 (rich). MOW (weak).

CLUTCH

Type	Borg & Beck 6¼ in. (157·8 mm.) dry plate. Type A.G.
Facing	Borg & Beck composite.
Spring identification colour	Blue (pressure springs), black (plate springs).
Free length of pressure springs	1·58 in. (40·1 mm.).

GEARBOX

Synchromesh		Second, third, top.
Ratios		Reverse and first 3·95 : 1. Second 2·3 : 1. Third 1·54 : 1. Top 1·00 : 1.
Overall gear ratios	Normal	Reverse and first 17·994 : 1. Second 10·477 : 1. Third 7·015 : 1. Top 4·55 : 1.
	Special	20·878 : 1. 12·157 : 1. 8·140 : 1. 5·286 : 1. 8/43 axle: 21·23 : 1. 12·36 : 1. 8·20 : 1. 5·375 : 1.

ENGINE APHM

Number of cylinders	4.
Cubic capacity	803 c.c. (49 cu. in.).
Bore	2·28 in. (57·92 mm.).
Stroke	3·00 in. (76·2 mm.).
Compression ratio	7·2 : 1.
System of cooling	Thermo-siphon, fan, and pump.
Thermostat setting: Standard	70 to 75° C. (158 to 167° F.).
With heater	80 to 85° C. (175 to 185° F.).
Radiator hoses	Moulded.
Oversize bores: First	+·010 in. (·254 mm.).
Second	+·020 in. (·508 mm.).
Third	+·030 in. (·762 mm.).
Fourth	+·040 in. (1·016 mm.).
	See page AA.14.
Firing order	1, 3, 4, 2.
Piston clearance: Bottom of skirt	·0006 to ·0024 in. (·015 to ·061 mm.).
Top of skirt	·0021 to ·0039 in. (·053 to ·099 mm.).
Ring gap	·006 to ·011 in. (·15 to ·275 mm.).
Number of compression rings	3.
Width of compression rings	·069 to ·070 in. (1·75 to 1·78 mm.).
Number of oil rings	1.
Width of oil ring	·124 to ·125 in. (3·15 to 3·175 mm.).
Oil pressure relief valve operates	60 lb./sq. in. (4·2 kg./cm.^{2}).
Gudgeon pin: Type	Clamped in little-end.
Diameter	·562 in. (14·27 mm.).
Fit in piston	Floating.
Crankpin: Length	1·068 in. (27·13 mm.).
Bearing length (shell)	·870 to ·880 in. (22·1 to 22·35 mm.).
Diameter (standard)	1·4379 to 1·4384 in. (36·52 to 36·535 mm.).
First regrind size	Std. —·020 in. (·508 mm.).
Second regrind size	Std. —·040 in. (1·016 mm.).
Connecting rod: Length between centres	5·75 in. (14·605 cm.).
Type of bearing	Shimless, steel-backed, white-metal-lined.
Side-clearance	·008 to ·010 in. (·203 to ·254 mm.).
Diametral clearance	·0006 to ·0016 in. (·015 to ·041 mm.).
Type of main bearings	Shimless, steel-backed, white-metal-lined.
Standard main journal diameter	1·7505 in. (44·46 mm.).
Main journals: First regrind size	—·020 in. (·508 mm.). Actual size 1·7305 in. (43·95 mm.).
Second regrind size	—·040 in. (1·016 mm.). Actual size 1·7105 in. (43·45 mm.).
Main bearings: Length	1·395 in. (35·43 mm.).
Length (shell)	1·182 to 1·192 in. (30·02 to 30·28 mm.).
End-clearance	·002 to ·003 in. (·051 to ·076 mm.).
Diametral clearance	·001 to ·002 in. (·025 to ·051 mm.).
Crankshaft—end-thrust taken on	Centre main bearing.
Number of camshaft bearings	3.
Type of camshaft bearings: Front	White-metal-lined, steel-backed.
Centre and rear	Plain (running in block).
Camshaft bearing clearance: Front	·001 to ·002 in. (·025 to ·051 mm.).
Centre and rear	·00125 to ·00275 in. (·032 to ·070 mm.).
Camshaft: End-thrust taken on	Front end on plate bolted to crankcase.
Drive (type)	Chain (single roller).
Camshaft chain: Pitch	⅜ in. (9·525 mm.) (single roller).
Number of links	52.

Valve timing markings	Dimples on camshaft and crankshaft chain wheels. Pointer on chain case and groove in crankshaft pulley.
Exhaust valve: Throat diameter	$\frac{7}{8}$ in. (22·22 mm.).
Diameter	Head: 1·000 to 1·005 in. (25·40 to 25·53 mm.). Stem: ·2788 to ·2793 in. (7·081 to 7·096 mm.).
Inlet valve: Throat diameter	$\frac{31}{32}$ in. (24·61 mm.) mean.
Diameter	Head: 1·093 to 1·098 in. (27·76 to 27·89 mm.). Stem: ·2793 to ·2798 in. (7·096 to 7·109 mm.).
Valve seat angle	45°.
Valve lift: Inlet	·285 in. (7·24 mm.).
Exhaust	·285 in. (7·24 mm.).
Inlet valve: Opens	5° B.T.D.C.
Closes	45° A.B.D.C.
Exhaust valve: Opens	40° B.B.D.C.
Closes	10° A.T.D.C.
	with ·019 in.(·48 mm.) valve rocker clearance (for checking purposes only).
Valve spring: Pressure—valve shut	$37\frac{1}{2}$ lb.±2 lb. (17·01 kg.±·91 kg.).
Length—valve shut	$1\frac{19}{64}$ in. (32·94 mm.).
Pressure—valve open	70 lb. (31·75 kg.).
Length—valve open	$1\frac{1}{64}$ in. (25·8 mm.).
Valve working clearance	·012 in. (·305 mm.) cold.
Valve guides	Renewable.
Valve guide clearance: Inlet	·0015 to ·0025 in. (·038 to ·064 mm.).
Exhaust	·0010 to ·0019 in. (·025 to ·048 mm.).

TORQUE SPANNER READINGS

Cylinder head stud nuts	40 lb. ft. (5·5 kg. m.).
Main bearing stud nuts	65 lb. ft. (9·0 kg. m.).
Connecting rod big-end bolts	33 lb. ft. (4·5 kg. m.).
Flywheel attachment bolts	35 to 40 lb. ft. (4·8 to 5·5 kg. m.).
Rocker shaft bracket nuts: Inner	25 lb. ft. (3·46 kg. m.).
Outer	40 lb. ft. (5·5 kg. m.).

FUEL SYSTEM

Carburetter	S.U. H1 type. 30° semi-downdraught. $1\frac{1}{8}$ in. throttle.
Carburetter needle	GG (standard). MOW (weak). EB (rich).

CLUTCH

Type	Borg & Beck $6\frac{1}{4}$ in. (158·7 mm.) dry plate.
Facing	Borg & Beck composite.
Spring identification colour	Blue (pressure springs), black (plate springs).
Free length of pressure springs	1·58 in. (40·1 mm.).
Pedal free movement	$\frac{3}{4}$ in. (20 mm.).

GEARBOX

Synchromesh: Second, third, top.

Ratios

	To Engine No. 183113	*To Engine No.* 266533	*From Engine No.* 266534
Reverse	5·174 : 1	5·54 : 1	5·382 : 1
First	4·09 : 1	4·09 : 1	3·965 : 1
Second	2·588 : 1	2·588 : 1	2·588 : 1
Third	1·679 : 1	1·679 : 1	1·679 : 1
Top	1·000 : 1	1·000 : 1	1·000 : 1

		To Engine No. 183113	*To Engine No.* 266533	*From Engine No.* 266534
Over-all gear ratios : 7/37 axle	Reverse	27·38 : 1	29·347 : 1	28·438 : 1
	First	21·618 : 1	21·618 : 1	20·958 : 1
	Second	13·69 : 1	13·69 : 1	13·69 : 1
	Third	8·88 : 1	8·88 : 1	8·88 : 1
	Top	5·286 : 1	5·286 : 1	5·286 : 1
8/43 axle	Reverse	27·81 : 1	29·777 : 1	28·928 : 1
	First	21·985 : 1	21·985 : 1	21·312 : 1
	Second	13·909 : 1	13·909 : 1	13·909 : 1
	Third	9·029 : 1	9·029 : 1	9·029 : 1
	Top	5·375 : 1	5·375 : 1	5·375 : 1

MORRIS MINOR (Series MM AND Series II)

FRONT AXLE AND STEERING

Camber	Nil (1° on models with rubber top link bushes).
Caster angle	3°.
Toe-in	$\frac{3}{32}$ in. (2·5 mm.).
King pin inclination	$8\frac{1}{2}$° ($7\frac{1}{2}$° on models with rubber top link bushes).
Angle of inner wheel with outer wheel at 20°	18° 15′.
Turns of steering-wheel (lock to lock)	2·6.
Track	$50\frac{5}{8}$ in. (1·284 m.).
Turning circle	R.H. 33 ft. 1 in. (10·09 m.). L.H. 32 ft. 11 in. (10·04 m.).
Wheelbase	86 in. (218·44 cm.).
Ground clearance	$6\frac{3}{4}$ in. (17 cm.).
Tyre size	5·00/5·20—14.
Tyre pressures: Normal with two passengers	Front: 22 lb./sq. in. (1·6 kg./cm.^{2}). Rear: 22 lb./sq. in. (1·6 kg./cm.^{2}).
Fully loaded with four passengers and luggage	Front: 22 lb./sq. in. (1·6 kg./cm.^{2}). Rear: 24 lb./sq. in. (1·7 kg./cm.^{2}).

REAR AXLE

Type of axle	Semi-floating or three-quarter-floating.
Type of drive	Hypoid gears.
Ratio or number of teeth	9/41, 7/37, or 8/43.
Adjustment	By distance pieces.
Track	$50\frac{5}{16}$ in. (1·278 m.).

BRAKES

Type	Lockheed hydraulic 7 in. (17·8 cm.) dia.
Type of linings	MR11.
Lining size: Front	6·54 in. × 1·22 in. × ·198 in. (16·6 cm. × 31·0 mm. × 5·0 mm.).
Rear	6·54 in. × 1·22 in. × ·198 in. (16·6 cm. × 31·0 mm. × 5·0 mm.).
Number of rivets	10.

SPRINGS

Type: Front	Torsion bar.
Rear	Semi-elliptic.
Working load: Front	462 lb. (209·5 kg.).
Rear	440 lb. (199·6 kg.).
Length—rear	43·5 in. (110·5 cm.).
Width—rear	$1\frac{1}{2}$ in. (38·1 mm.).

Number of leaves—rear	7.
Thickness of leaves—rear	$\frac{7}{32}$ in. (5·56 mm.).
Free camber—rear	3·5 in. (88·9 mm.); models with second-type axle 4·125 in. (10·5 cm.).
Working camber—rear	·28 in. (7·1 mm.) negative; models with second-type axle ·34 in. (8·6 mm.) positive.

HYDRAULIC DAMPERS

Type	Armstrong double-acting.

IGNITION SYSTEM

Distributor: Rotation	Anti-clockwise (viewed from above).
Manual advance	None.
Automatic advance: Series MM	Centrifugal governor 18° 22′.
Series II	Vacuum control 7 to 9°; centrifugal 17 to 19°.
Advance starts at	400 to 650 r.p.m.
Contact breaker gap	·010 to ·012 in. (·25 to ·30 mm.).
Contact breaker gap (high-lift cam)	·014 to ·016 in. (·36 to ·40 mm.).
Contact spring tension	20 to 24 oz. (567 to 680 gm.).
Condenser or capacitor capacity	·2 mf.
Sparking plug, make and type: Series MM	Champion L10, 14 mm., ½ in. reach.
Series II	Champion N5 (was code NA8), 14 mm., ¾ in. reach.
Sparking plug gap: Series MM	Champion L10, ·025 in. (·64 mm.).
Series II	Champion N5 (was code NA8), ·025 in. (·64 mm.).
Ignition timing: Series MM	T.D.C. (fully retarded), final setting by road trial.
Series II	2° B.D.T.C. ($\frac{3}{32}$ in. (2·4 mm.) on periphery of crankshaft pulley).

ELECTRICAL EQUIPMENT

Charging system	Compensated voltage control.
Battery: Type	Lucus BTW7A/1.
Voltage	12.
Capacity	43 amp.-hr. at 20-hr. rate.
Earth	Positive.

GENERAL DIMENSIONS

Over-all length	148 in. (376 cm.).
Over-all width	61 in. (155 cm.).
Over-all height	60 in. (152 cm.).
Ground clearance	6¾ in. (17·1 cm.).

WEIGHTS

Kerbside	
2-door saloon	1,662 lb. (753 kg.).
4-door saloon	1,748 lb. (793 kg.).
Convertible	1,656 lb. (751 kg.).
Traveller	1,776 lb. (806 kg.).
Towing	1,344 lb. (609·5 kg.).

CAPACITIES (Series MM)

Sump	6½ pints (7·8 U.S. pints, 3·7 litres).
Gearbox	1½ pints (1·8 U.S. pints, ·85 litre).
Rear axle (use Hypoid oil only)	1½ pints (1·8 U.S. pints, ·85 litre).
Cooling system	13½ pints (14·2 U.S. pints, 7·7 litres).
Fuel	5 gallons (6 U.S. gallons, 22·7 litres).

CAPACITIES (Series II)

Sump and oil filter	6½ pints (7·8 U.S. pints, 3·7 litres).
Gearbox (use engine oil supply)	2¼ pints (2·7 U.S. pints, 1·3 litres).
Rear axle (use Hypoid oil only)	1½ pints (1·8 U.S. pints, ·85 litre).
Cooling system	9¾ pints (11·7 U.S. pints, 5·5 litres).
Heater (when fitted)	1 pint (1·2 U.S. pints, ·568 litre).
Fuel	5 gallons (6 U.S. gallons, 22·7 litres).

The general data for the Minor 1000 with 948-c.c. engine are the same as for the Minor (Series II), with the following exceptions:

ENGINE APJM or 9M

Cubic capacity	948 c.c. (57·846 cu. in.).
Bore	2·478 in. (62·94 mm.).
Compression ratio	8·3 : 1 or 7·2 : 1.

Crankshaft

Standard main bearing diameter	1·7505 to 1·751 in. (44·46 to 44·47 mm.).
Main bearing length: Front	1·336 to 1·352 in. (33·96 to 34·33 mm.).
Centre	1·379 to 1·381 in. (35·02 to 35·07 mm.).
Rear	1·393 to 1·397 in. (35·38 to 35·48 mm.).
Crankpin: Diameter (standard)	1·6254 to 1·6259 in. (41·28 to 41·29 mm.).
Bearing length	1·068 to 1·070 in. (27·15 to 27·20 mm.).
Connecting rod—type of bearing	Steel-backed, lead-bronze, lead-indium-plated surface or steel-backed, copper-lead, lead-tin-plated surface.

Piston rings

Compression: Plain	Top ring (chrome-faced on later engines).
Tapered	Second and third rings.
Oil control type	Slotted scraper.

Lubrication system

Oil filter type	Full-flow.

IGNITION SYSTEM

Ignition timing: Low compression	4° B.T.D.C. ($\frac{3}{16}$ in. (4·76 mm.) on the periphery of the crankshaft pulley).
High compression	5° B.T.D.C.
High compression (alternative: for cars using fuel of an octane value not exceeding 83)	T.D.C.

ELECTRICAL EQUIPMENT

System	12-volt. Positive earth.
Charging system	Compensated voltage control.
Battery	Lucas BT7A (BTZ7A Export).
Battery capacity	43 amp.-hr. (at 20-hour rate).
Starter motor	Lucas 4-brush M35G.
Starter motor lock current draw	370 to 390 amps. at 7·9 to 7·3 volts.
Dynamo	Lucas C40/1.
Maximum output	22 amps. at 13·5 volts at 2,250 dynamo r.p.m.
Control box	Lucas RB106/2.
Cut-out: Cut-in voltage	12·7 to 13·3.
Drop-off voltage	8·5 to 11·0.
Reverse current	3·0 to 5·0 amps.

Regulator RB106/2 (at 3,000 r.p.m. dynamo speed):	
Open-circuit setting at 20° C. (68° F.)	16·0 to 16·6 volts.
For ambient temperatures other than 20° C. (68° F.) the following allowances should be made to the above setting:	
For every 10° C. (18° F.) above 20° C. (68° F.) subtract ·1 volt.	
For every 10° C. (18° F.) below 20° C. (68° F.) add ·1 volt.	

FUEL SYSTEM

Carburetter	S.U. H2 type. 1¼ in. (31·75 mm.) throttle.
Carburetter needle: 1957/8	BX1 (standard). S (rich). MO (weak).
1957/8 (paper air cleaner) ..	M (standard).
Later models	M (standard). AH2 (rich). EB (weak).
Carburetter (later models)	S.U. HS2 type, 1¼ in. (31·75 mm.) throttle.
Carburetter needle	M (standard). AH2 (rich). EB (weak).
Carburetter spring	Red.

AIR CLEANER

Make	A.C.
Type: Early models	CL oil bath.
Later models	Coopers' dry type with paper element.

CLUTCH

Facing	Wound yarn.
Spring identification colour: Pressure: Early models	3 dark blue, 3 yellow and green.
Later models	6 yellow and green.
Plate	Light grey.

GEARBOX

Ratios	Reverse	4·664 : 1.
	First	3·628 : 1.
	Second	2·374 : 1.
	Third	1·412 : 1.
	Top	1·000 : 1.
Over-all ratios	Reverse	21·221 : 1.
	First	16·507 : 1.
	Second	10·802 : 1.
	Third	6·425 : 1.
	Top	4·555 : 1.
Speedometer drive gear to pinion ratio		5/13.

CAPACITIES

Fuel (commencing Car No. 487048 and Traveller No. 485127)	6½ gallons (7·83 U.S. gallons, 29·6 litres).

REAR AXLE

Type of axle	Three-quarter-floating.
Ratio	4·55 : 1.

REAR SPRINGS (from Car No. 680464)

Number of leaves	5.
Thickness of leaves	¼ in. (6·35 mm.).
Free camber	4·22 in. (10·72 cm.).
Working camber	·78 in. (19·84 mm.) positive.

TORQUE SPANNER READINGS

Front hub nut	35 to 40 lb. ft. (4·8 to 5·5 kg. m.).
Road wheel nuts	37 to 39 lb. ft. (5·1 to 5·4 kg. m.).
Steering-wheel nut	32 to 37 lb. ft. (4·4 to 5·1 kg. m.).

The following general data for the Minor 1000 with 1098-c.c. engine should be read in conjunction with the general data given for the Minor 1000 with 948-c.c. engine, and the Minor (Series II).

ENGINE 10MA, 10ME AND 10V

Bore	2·543 in. (64·58 mm.).
Stroke	3·296 in. (83·72 mm.).
Capacity	67 cu. in. (1098 c.c.).
Idling speed	500 r.p.m.
Compression ratio	8·5 : 1 (7·5 : 1 available).
Compression pressure: (H.C.)	160 lb./sq. in. (11·25 kg./cm.²).
(L.C.)	130 lb./sq. in. (9·14 kg./cm.²).
Capacity of combustion chamber (valves fitted)	1·95 cu. in. (32 c.c.).
Oversize bore: First	+·010 in. (·254 mm.).
Max.	+·020 in. (·508 mm.).

Crankshaft

Main journal diameter	1·7505 to 1·751 in. (44·46 to 44·47 mm.).
Minimum regrind diameter	1·7105 in. (43·45 mm.).
Crankpin journal diameter	1·6254 to 1·6259 in. (41·28 to 41·29 mm.).
Crankpin minimum regrind diameter	1·5854 in. (40·27 mm.).

Main bearings

Number and type	3 Shell type.
Material	Steel-backed copper-lead.
Length	1 1/16 in. (27 mm.).
Diametral clearance	·001 to ·0027 in. (·025 to ·070 mm.).
Undersizes	—·010 in., —·020 in., —·030 in., —·040 in. (·254 mm., ·508 mm., ·762 mm., 1·016 mm.).

Big-end bearings

Material	Steel-backed copper-lead.
Bearing side-clearance	·008 to ·012 in. (·203 to ·305 mm.).
Bearing diametral clearance	·001 to ·0025 in. (·025 to ·063 mm.).

Pistons

Type	Solid skirt.
Clearances: Bottom of skirt	·0005 to ·0011 in. (·013 to ·028 mm.).
Top of skirt	·0021 to ·0037 in. (·053 to ·094 mm.).
Oversizes	+·010 in., +·020 in. (·254 mm., ·508 mm.).

Piston rings

Compression: Type: Top ring	Plain, internally chamfered (chrome-faced).
Second and third rings	Tapered.
Width: Top ring	·062 to ·0625 in. (1·575 to 1·587 mm.).
Second and third rings	·0615 to ·0625 in. (1·558 to 1·587 mm.).
Thickness	·106 to ·112 in. (2·69 to 2·84 mm.).
Fitted gap	·007 to ·012 in. (·178 to ·305 mm.).
Clearance in groove	·002 to ·004 in. (·051 to ·102 mm.).
Oil control: Type (earlier engines)	Slotted scraper.
Width	·124 to ·125 in. (3·15 to 3·175 mm.).
Thickness	·106 to ·112 in. (2·69 to 2·84 mm.).
Fitted gap	·007 to ·012 in. (·178 to ·035 mm.).
Clearance in groove	·0015 to ·0035 in. (·038 to ·089 mm.).
Type (later engines)	Welworthy Duaflex 61.
Fitted gap: rail	·012 to ·028 in. (·31 to ·7 mm.).
Side spring	·1 to ·15 in. (2·54 to 3·8 mm.).

Gudgeon pin

Type	Fully floating.
Fit in piston	Hand push fit.

Valves

Head diameter: Inlet	1·156 in. (29·37 mm.).
Exhaust	1·000 in. (25·40 mm.).
Stem diameter: Inlet	·2793 to ·2798 in. (7·094 to 7·107 mm.).
Exhaust	·2788 to ·2793 in. (7·081 to 7·094 mm.).
Valve lift	·312 in. (7·925 mm.).
Valve stem to guide clearance: Inlet	·0015 to ·0025 in. (·038 to ·064 mm.).
Exhaust	·002 to ·003 in. (·051 to ·076 mm.).
Valve rocker clearance: Running	·012 in. (·305 mm.) (cold).
Timing	·021 in. (·53 mm.).
Valve rocker bush bore (reamed)	·5630 to ·5635 in. (14·30 to 14·312 mm.).

Valve timing

Inlet valve: Opens	5° B.T.D.C.	With ·021 in. (·53 mm.) valve rocker clearance (for checking purposes only).
Closes	45° A.B.D.C.	
Exhaust valve: Opens	51° B.B.D.C.	
Closes	21° A.T.D.C.	

Valve guides

Length	1·531 in. (38·89 mm.).
Diameter: Outside	·469 in. (11·91 mm.).
Inside	·2813 to ·2818 in. (7·145 to 7·157 mm.).

Valve springs

Free length	1·750 in. (44·45 mm.).
Number of working coils	4½.
Pressure: Valve open	88 lb. (39·9 kg.).
Valve closed	55·5 lb. ± 2 lb. (25·2 kg. ± ·9 kg.).

Tappets

Type	Barrel.
Diameter	·812 in. (20·64 mm.).
Length	1·5 in. (38·10 mm.).

Camshaft

Journal diameters: Front	1·6655 to 1·666 in. (42·304 to 42·316 mm.).
Centre	1·62275 to 1·62325 in. (41·218 to 41·231 mm.).
Rear	1·3725 to 1·3735 in. (34·862 to 34·887 mm.).
End-float	·003 to ·007 in. (·076 to ·178 mm.).
Bearings: Type	White-metal-lined, steel-backed.
Inside diameter: Front	1·667 to 1·6675 in. (42·342 to 42·355 mm.).
Centre	1·62425 to 1·62475 in. (41·256 to 41·269 mm.).
Rear	1·3745 to 1·3750 in. (34·912 to 34·925 mm.).
Clearance	·001 to ·002 in. (·025 to ·051 mm.).

ENGINE LUBRICATION SYSTEM

Oil pump

Type	Internal gear or vane.
Relief pressure valve operates	60 lb./sq. in. (4·2 kg./cm.²).
Relief valve spring: Free length	2 41/64 in. (72·63 mm.).
Fitted length	2 5/32 in. (54·77 mm.).

Oil filter

Type	Full-flow with paper element.
Capacity	1 pint (1·2 U.S. pints, ·57 litre).

Oil pressure

Normal running	60 lb./sq. in. (4·2 kg./cm.^{2}).
Idling (minimum)	15 lb./sq. in. (1·05 kg./cm.^{2}).

TORQUE WRENCH SETTINGS

Engine

Cylinder head stud nuts	40 lb. ft. (5·5 kg. m.).
Connecting rod big-end bolts	35 lb. ft. (4·8 kg. m.).
Main bearing set screws	60 lb. ft. (8·3 kg. m.).
Flywheel set screws	35 to 40 lb. ft. (4·8 to 5·5 kg. m.).
Rocker bracket nuts	25 lb. ft. (3·46 kg. m.).
Sump to crankcase	6 lb. ft. (·8 kg. m.).
Cylinder side cover	2 lb. ft. (·28 kg. m.).
Timing cover—$\frac{1}{4}$ in. UNF. bolts	6 lb. ft. (·8 kg. m.).
Timing cover—$\frac{5}{16}$ in. UNF. bolts	14 lb. ft. (1·9 kg. m.).
Water pump	17 lb. ft. (2·3 kg. m.).
Water outlet elbow	8 lb. ft. (1·1 kg. m.).
Oil filter	16 lb. ft. (2·2 kg. m.).
Oil pump	9 lb. ft. (1·2 kg. m.).
Manifold to cylinder head	15 lb. ft. (2·1 kg. m.).
Rocker cover	4 lb. ft. (·56 kg. m.).
Crankshaft pulley nut	70 lb. ft. (9·6 kg. m.).

Alternator

Brush box fixing screws	10 lb. in. (·115 kg. m.).
Diode heat sink fixings	25 lb. in. (·288 kg. m.).
Through-bolts	45 to 50 lb. in. (·518 to ·576 kg. m.).

Rear suspension

Rear spring U-bolt nuts	12½ lb. ft. (1·7 kg. m.).

FUEL SYSTEM

Carburetter

Make and type	S.U. Type HS2.
Float setting	$\frac{1}{8}$ to $\frac{3}{16}$ in. (3·18 to 4·76 mm.).
Diameter	1¼ in. (31·75 mm.).
Jet	·090 in. (2·29 mm.).
Needle	AN (standard). H6 (rich). EB (weak).
Spring	Red.

IGNITION SYSTEM

Sparking plugs

Make	Champion.
Type	N5.
Size	14 mm.
Gap	·024 to ·026 in. (·61 to ·66 mm.).

Coil

Make	Lucas.
Type	LA 12.
Resistance	3·2 to 3·4 ohms.

Distributor

Make/type	Lucas 25D4.
Dwell angle	60°±3°.
Contact breaker gap	·014 to ·016 in. (·36 to ·40 mm.).
Condenser capacity	·18 to ·24 mF.
Timing: Static	3° B.T.D.C.
Stroboscopic	6° B.T.D.C. at 600 engine r.p.m.

	High compression	*High compression*	*Low compression*
Serial number	40849B	41124 and 41148	40899B and 41025
Automatic advance starts†	200 r.p.m.	600 r.p.m.	500 r.p.m.
Vacuum advance: Starts	6 in. (152 mm.) Hg.	5 in. (127 mm.) Hg.	5 in. (127 mm.) Hg.
Ends	14° at 13 in. (330 mm.) Hg.	6° at 8 in. (203 mm.) Hg.	20° at 17 in. (432 mm.) Hg.
Maximum advance*†	30° to 34° at 6,400 r.p.m.	22° to 26° at 5,500 r.p.m.	32° to 36° at 5,600 r.p.m.
Decelerating check*†	25° to 29° at 4,400 r.p.m.	19° to 23° at 4,400 r.p.m.	28° to 32° at 3,800 r.p.m.
	12° to 16° at 2,000 r.p.m.	15° to 19° at 3,000 r.p.m.	14° to 18° at 2,500 r.p.m.
	1° to 5° at 800 r.p.m.	7° to 11° at 1,600 r.p.m.	1° to 5° at 1,200 r.p.m.
	0° to 2° at 500 r.p.m.	0° to 4° at 1,000 r.p.m.	0° to 1° at 700 r.p.m.

* Vacuum disconnected. † Crankshaft degrees and r.p.m.

ELECTRICAL EQUIPMENT

Battery	Lucas BT7A (BTZ7A Export). Lucas N9 (NZ9 Export). Lucas D9 (DZ9 Export)—later models.
Capacity (Type D9): 20-hour rate	40 amp.-hr.
Starter motor	Lucas M35J—later models.
Alternator	Type 11AC.
Maximum output	43 amperes.
Minimum brush length	$\frac{5}{32}$ in. (3·97 mm.).
Brush spring pressure:	
$\frac{25}{32}$ (19·84 mm.) compressed length	4 to 5 oz. (113 to 142 gm.).
$\frac{13}{32}$ (10·32 mm.) compressed length	7½ to 8½ oz. (212 to 241 gm.).

CLUTCH

Type	Single dry plate.
Diameter	7¼ in. (184 mm.).
Facing material	Wound yarn.
Pressure springs	6.
Colour	Yellow.
Pedal free movement	1⅜ to 1½ in. (35 to 38 mm.).

GEARBOX

Number of forward speeds	4.
Synchromesh	Second, third, and fourth gears.
Ratios: Top	1·0 : 1.
Third	1·412 : 1.
Second	2·172 : 1.
First	3·628 : 1.
Reverse	4·664 : 1.
Over-all ratios: Top	4·220 : 1.
Third	5·950 : 1.
Second	9·169 : 1.
First	15·276 : 1.
Reverse	19·665 : 1.

REAR AXLE

Ratio	4·22 : 1.

BRAKES

Type	Lockheed hydraulic.
Front	
Drum diameter	8 in. (20·3 cm.).
Swept area	73·9 sq. in. (477 cm.^{2}).
Lining material	Ferodo AM8.
Rear	
Drum diameter	7 in. (17·8 cm.).
Swept area	53·6 sq. in. (346 cm.^{2}).
Lining material	Ferodo AM8.

TYRES

Size	5·20—14.

WEIGHTS

Kerbside	
2-door saloon	1,686 lb. (764 kg.).
4-door saloon	1,733 lb. (786 kg.).
Convertible	1,688 lb. (766 kg.).
Traveller	1,821 lb. (826 kg.).
Towing	1,344 lb. (609·5 kg.).

CAPACITIES

Cooling system	8¾ pints (10·5 U.S. pints, 5·0 litres).
Heater (when fitted)	1 pint (1·2 U.S. pints, ·57 litre).

SECTION A

ENGINE (USHM2)

OF THE MORRIS MINOR (Series MM)

THE ENGINE COMPONENTS

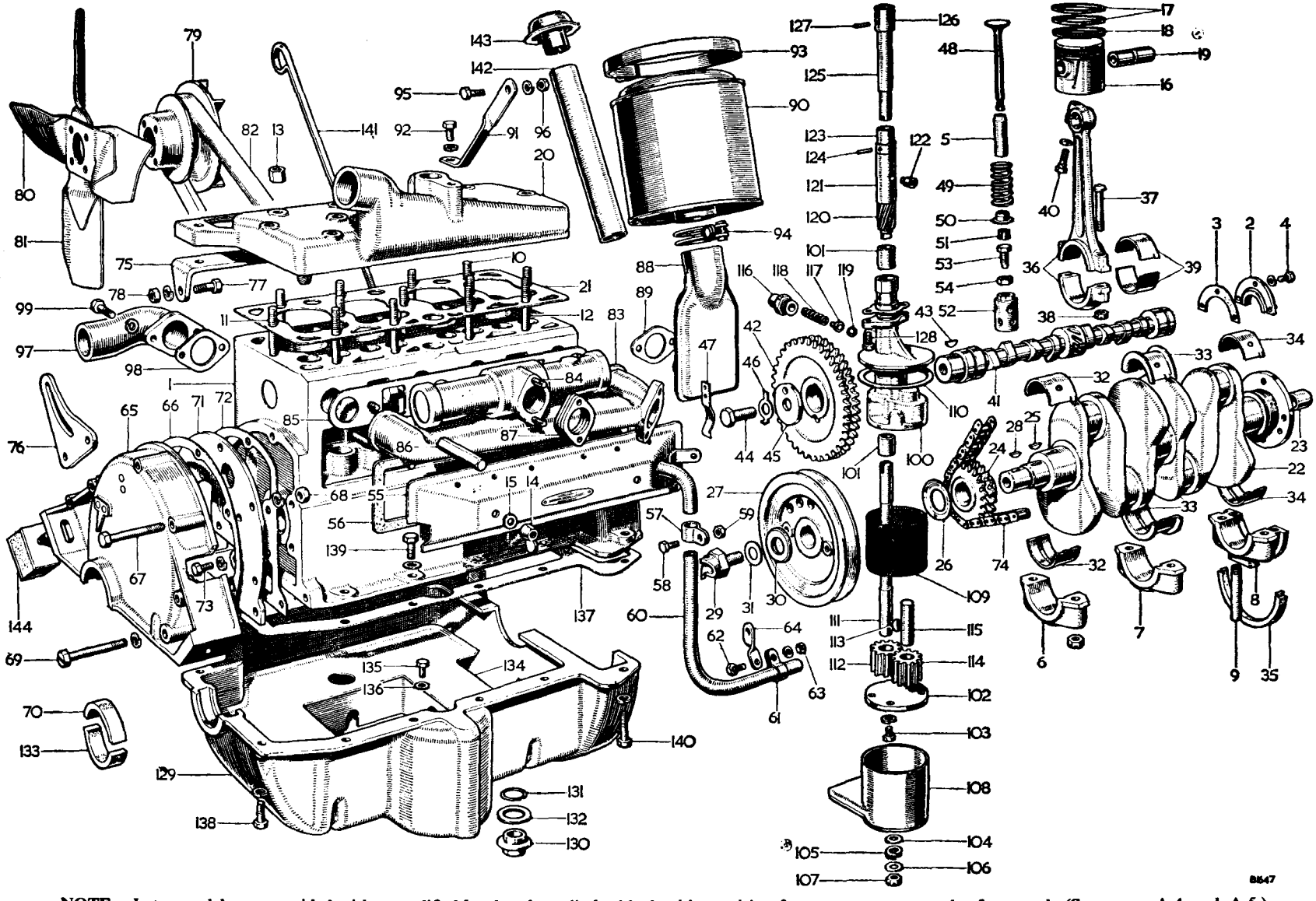

NOTE.—Later models are provided with a modified head and a cylinder block with provision for a water pump at the front end. (See pages A.4 and A.5.) Export models are fitted with an oil bath air cleaner. For remaining components and later engines see pages A.4 and A.5.

KEY TO THE ENGINE COMPONENTS

No.	Description
1.	Cylinder block assembly.
2.	Cover—crankshaft oil seal.
3.	Joint—crankshaft oil seal cover.
4.	Bolt—crankshaft oil seal cover.
5.	Valve guide.
6.	Cap—main bearing—front.
7.	Cap—main bearing—centre.
8.	Cap—main bearing—rear.
9.	Pipe—oil drain.
10.	Stud—cylinder head—short.
11.	Stud—cylinder head—medium.
12.	Stud—cylinder head—long.
13.	Nut—cylinder head stud.
14.	Wing nut—tappet cover stud.
15.	Washer—tappet cover stud.
16.	Piston.
17.	Piston ring—top.
18.	Piston ring—bottom.
19.	Gudgeon pin.
20.	Cylinder head.
21.	Cylinder head gasket.
22.	Crankshaft.
23.	Bush—drive gear spigot.
24.	Gear—timing.
25.	Key—timing gear.
26.	Oil thrower.
27.	Pulley.
28.	Key—pulley.
29.	Nut—starting-handle dog.
30.	Washer—pulley.
31.	Shim—starting-handle dog nut (·005 in.).
32.	Bearing—front main.
33.	Bearing—centre main.
34.	Bearing—rear main.
35.	Seal—rear bearing cap.
36.	Connecting rod.
37.	Bolt—connecting rod cap.
38.	Nut—cap bolt.
39.	Bearing—halves.
40.	Clamp screw—gudgeon pin.
41.	Camshaft.
42.	Gear.
43.	Key—gear.
44.	Thrust screw—camshaft.
45.	Washer—thrust screw.
46.	Lock washer—thrust screw.
47.	Thrust spring—camshaft.
48.	Valve.
49.	Spring—valve.
50.	Cap—valve spring.
51.	Retainers—valve spring cap.
52.	Tappet.
53.	Screw—tappet adjusting.
54.	Locknut—tappet adjusting screw.
55.	Cover—tappet chamber.
56.	Joint—tappet chamber cover.
57.	Clip—breather elbow.
58.	Bolt—elbow clip.
59.	Nut—elbow clip bolt.
60.	Fume pipe.
61.	Clip—fume pipe.
62.	Bolt—fume pipe clip.
63.	Nut—fume pipe clip bolt.
64.	Support—fume pipe.
65.	Case—timing gear.
66.	Joint—timing gear case.
67.	Bolt—timing case to packing plate.
68.	Nut—timing case bolt.
69.	Bolt—slotted—timing case to block.
70.	Packing—timing case to crankshaft.
71.	Plate—packing—front.
72.	Joint—front packing plate.
73.	Bolt—packing plate to block.
74.	Chain—timing.
75.	Bracket—dynamo swivel.
76.	Bracket—swivel—dynamo.
77.	Bolt—dynamo swivel.
78.	Nut—dynamo swivel bolt.
79.	Pulley—dynamo.
80.	Fan blade.
81.	Fan blade—offset.
82.	Belt—fan and dynamo.
83.	Manifold—inlet and exhaust.
84.	Stud—manifold to carburetter.
85.	Gasket—manifold to cylinder block.
86.	Nut—manifold stud.
87.	Gasket—carburetter to manifold.
88.	Pipe—carburetter to air silencer (Home).
89.	Joint.
90.	Air silencer (Home).
91.	Bracket—silencer support (Home).
92.	Bolt—support bracket (Home).
93.	Clip—silencer to support (Home).
94.	Clip—silencer to pipe (Home).
95.	Bolt—support clip (Home).
96.	Nut—support clip bolt (Home).
97.	Pipe—water inlet.
98.	Joint—water inlet pipe.
99.	Bolt—water inlet pipe to block.
100.	Body—oil pump.
101.	Bush—oil pump shaft.
102.	Cover—oil pump body.
103.	Bolt—cover to body.
104.	Washer—fibre—stud.
105.	Washer—spring—stud.
106.	Washer—plain—stud.
107.	Nut—stud.
108.	Hood—pump.
109.	Gauze—filter.
110.	Joint—hood.
111.	Shaft—pump.
112.	Gear—driver.
113.	Key—driver gear to shaft
114.	Gear—driven.
115.	Pin—driven gear.
116.	Plug—relief valve.
117.	Pad—relief valve.
118.	Spring—relief valve.
119.	Ball—relief valve.
120.	Shaft and gear—pump drive.
121.	Bush—shaft and gear.
122.	Dowel—bush retaining.
123.	Connection—shaft and gear.
124.	Pin—connection retaining.
125.	Shaft—distributor drive.
126.	Sleeve—distributor drive shaft.
127.	Pin—distributor drive shaft sleeve.
128.	Bolt—pump body to block.
129.	Sump.
130.	Plug—drain.
131.	Circlip—drain plug.
132.	Washer—drain plug.
133.	Packing—sump to crankshaft—front end.
134.	Tray—sump.
135.	Bolt—tray to sump.
136.	Washer—tray bolt.
137.	Joint—sump to block.
138.	Bolt—sump to block—short.
139.	Bolt—sump to block (stud and nut on later models).
140.	Bolt—sump to block—long.
141.	Indicator—oil level.
142.	Oil filler—with baffle.
143.	Cap—oil filler.
144.	Mounting rubber—front.

THE ENGINE COMPONENTS

Models fitted with water pump, external oil filter, and car heater equipment

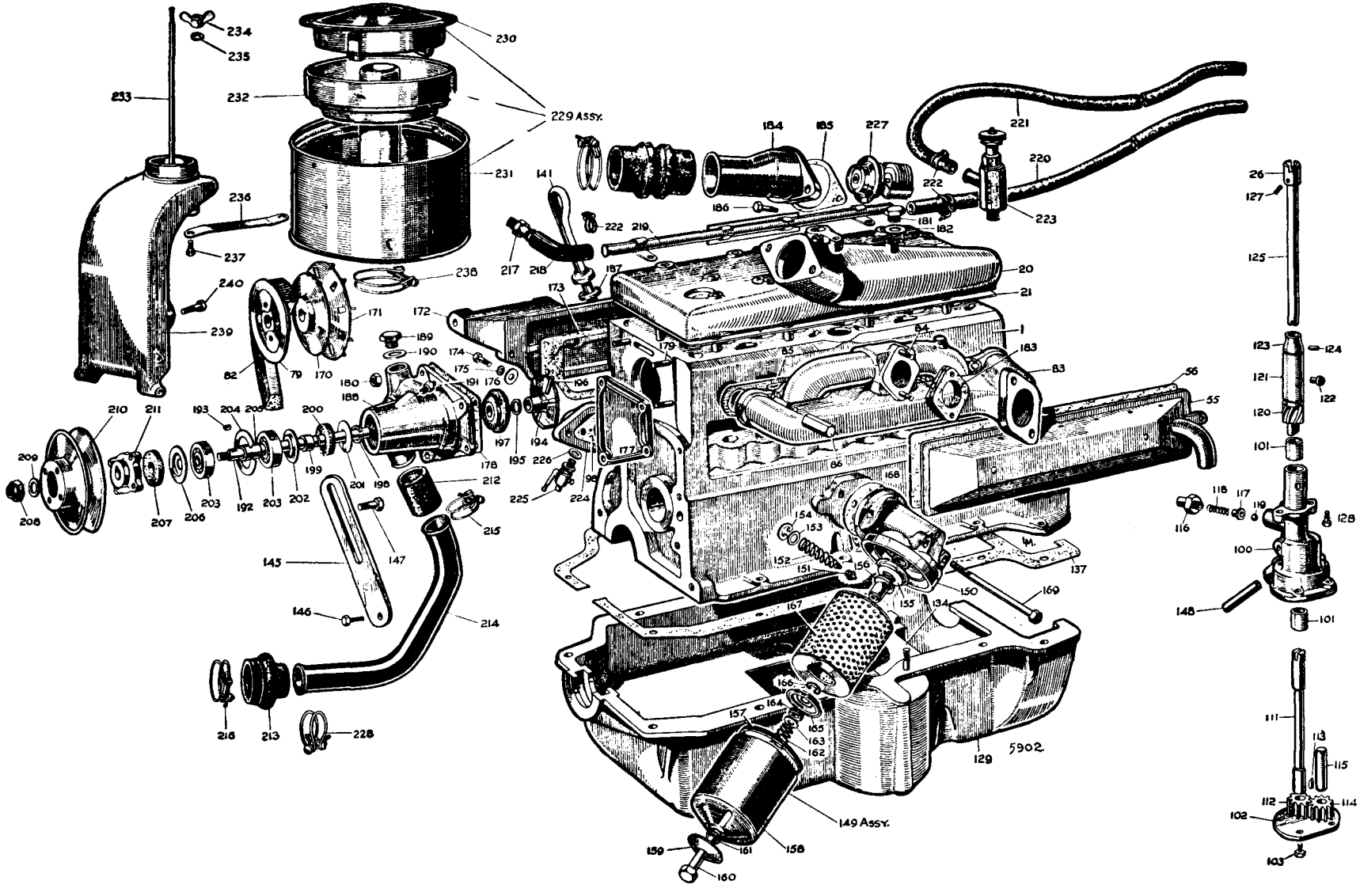

GENERAL DESCRIPTION

The four-cylinder, side-valve engine is built in unit construction with a single-plate dry clutch and four-speed gearbox.

It has a robust four-throw crankshaft, carried in three renewable white-metal steel-backed bearings fitted without shims.

The thrust is taken by the centre bearing, which is flanged for this purpose.

The connecting rod big-end bearings are also renewable white-metal-lined steel-backed bearings fitted without shims. The little-end, embracing the gudgeon pin, is slotted and fitted with a clamp screw and spring washer, which serve to lock it solidly to the gudgeon pin.

The pistons are of tin-coated aluminium alloy, and are fitted with two compression rings and one oil control ring.

The camshaft is supported in three bearings in the cylinder block casting and is driven from the crankshaft by a duplex roller chain. The camshaft bearings are pressure-fed with oil from the main oil gallery.

The camshaft operates the valves through the medium of chill-cast tappets located in guides cast integrally with the block. Provision for adjustment of the tappets is made by the orthodox tappet head screw and locknut.

Cooling is by thermo-siphon action assisted by a fan secured to the dynamo pulley.

LUBRICATION SYSTEM

The oil supply is carried in the sump below the cylinder block. An oil filler and an oil indicator rod are fitted on the right-hand side of the engine. The oil level indicator rod has two marks on its lower end indicating the maximum and minimum levels.

The gear-type oil pump is carried in the sump of the engine, and is driven from a helical gear on the camshaft. On earlier models it draws oil from the sump through a large filter and passes clean oil to the pump shaft tunnel. On later models an external filter of the renewable element type is fitted on the left-hand side of the cylinder block.

At its upper end the pump shaft tunnel on early models

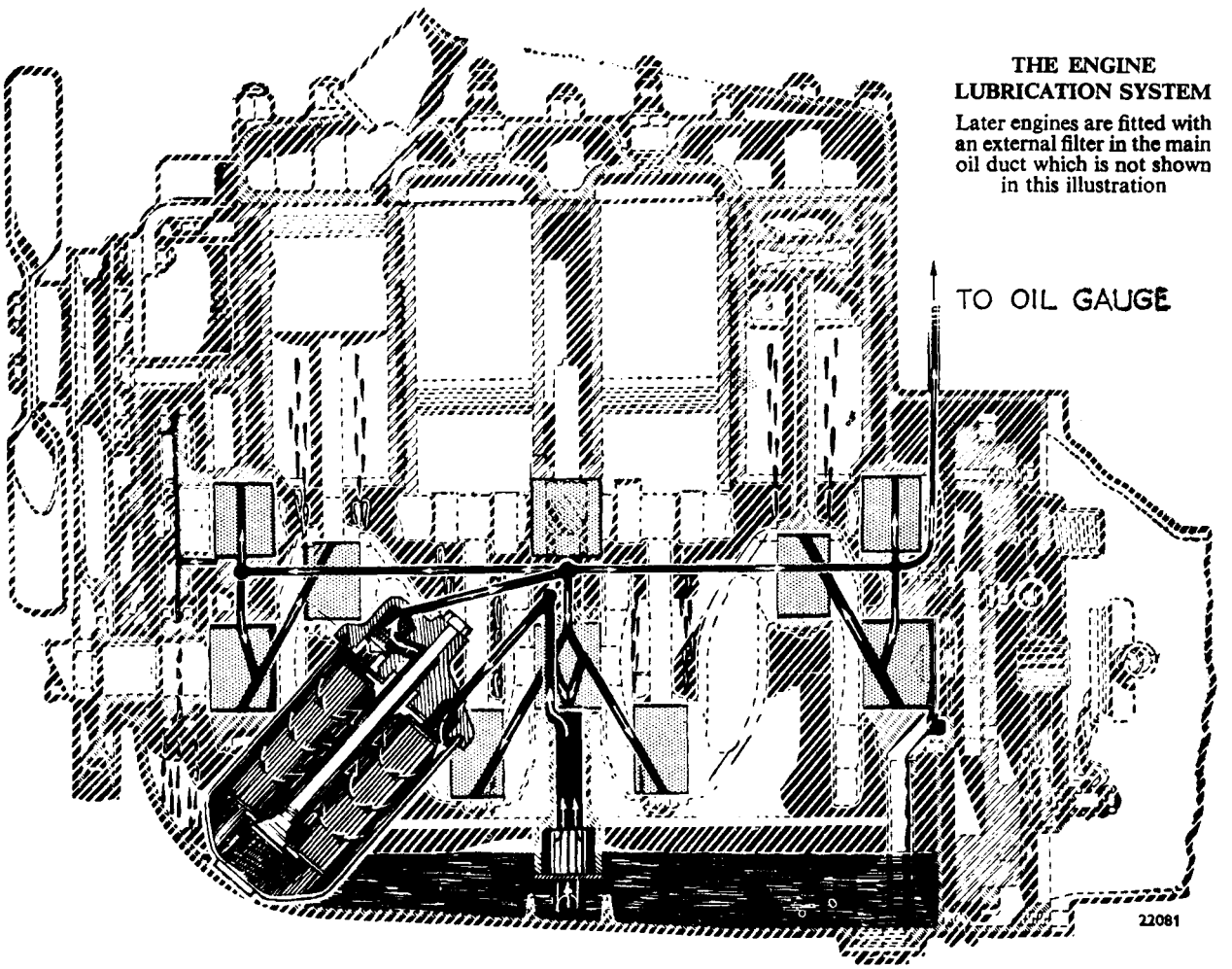

THE ENGINE LUBRICATION SYSTEM
Later engines are fitted with an external filter in the main oil duct which is not shown in this illustration

KEY TO THE ENGINE COMPONENTS

No.	Description
1.	Cylinder block assembly.
20.	Cylinder head.
21.	Cylinder head gasket.
55.	Cover—tappet chamber.
56.	Joint—tappet chamber cover.
79.	Pulley—dynamo.
82.	Belt—fan and dynamo.
83.	Manifold—inlet and exhaust.
84.	Stud—manifold to carburetter.
85.	Gasket—manifold to cylinder block.
86.	Nut—manifold stud.
98.	Joint—water inlet pipe.
100.	Body—oil pump.
101.	Bush—oil pump shaft.
102.	Cover—oil pump body.
103.	Bolt—cover to body.
111.	Shaft—pump.
112.	Gear—driver.
113.	Key—driver gear to shaft.
114.	Gear—driven.
115.	Pin—driven gear.
116.	Plug—relief valve.
117.	Pad—relief valve.
118.	Spring—relief valve.
119.	Ball—relief valve.
120.	Shaft and gear—pump drive.
121.	Bush—shaft and gear.
122.	Dowel—bush retaining.
123.	Connection—shaft and gear.
124.	Pin—connection retaining.
125.	Shaft—distributor drive.
126.	Sleeve—distributor drive shaft.
127.	Pin—distributor drive shaft sleeve.
128.	Bolt—pump body to block.
129.	Sump.
134.	Tray—sump.
137.	Joint—sump to block.
141.	Indicator—oil level.
145.	Link—adjusting.
146.	Bolt—swivel bracket and link.
147.	Screw—dynamo adjusting.
148.	Pipe—oil suction.
149.	Oil filter assembly.
150.	Head—oil filter.
151.	Valve—relief.
152.	Spring—valve.
153.	Washer—valve spring.
154.	Circlip—spring retainer.
155.	Guide—top—element.
156.	Centre tube.
157.	Gasket—sump to head.
158.	Sump filter.
159.	Reinforcement washer—sump.
160.	Centre-bolt.
161.	Seal—centre-bolt.
162.	Spring—centre-bolt.
163.	Washer—bottom seal.
164.	Seal—bottom—element guide.
165.	Guide—bottom—element.
166.	Circlip—centre-bolt.
167.	Element.
168.	Joint—to block.
169.	Bolt—to block.
170.	Pulley—rear half—dynamo.
171.	Fan—dynamo.
172.	Cover—water jacket.
173.	Joint—cover.
174.	Bolt—cover.
175.	Washer—cover bolt.
176.	Washer—inside cover.
177.	Plate—water pump blanking.
178.	Joint—pump to block or plate to block.
179.	Stud—blanking plate.
180.	Nut—stud.
181.	Plug—heater connection.
182.	Washer—plug.
183.	Distance piece—carburetter to manifold.
184.	Pipe—outlet.
185.	Joint—pipe.
186.	Bolt—pipe.
187.	Felt washer.
188.	Body—water pump.
189.	Plug—heater connection.
190.	Washer—heater plug.
191.	Grease nipple.
192.	Spindle.
193.	Key—spindle.
194.	Vane.
195.	Washer—vane.
196.	Taper pin—vane.
197.	Seal assembly.
198.	Circlip—spindle.
199.	Collar—spindle.
200.	Felt washer.
201.	Dust cover—flat.
202.	Dust cover—dished.
203.	Bearing.
204.	Circlip—bearing.
205.	Distance tube.
206.	Dust cover.
207.	Felt washer.
208.	Nut—spindle.
209.	Washer—spindle nut.
210.	Pulley.
211.	Hub—pulley.
212.	Hose—pump to connecting pipe.
213.	Hose—connecting pipe to radiator.
214.	Connecting pipe.
215.	Clip—hose—top.
216.	Clip—hose—large (to radiator).
217.	Union—pump to elbow.
218.	Elbow—rail to union.
219.	Pipe—water rail.
220.	Hose—heater to top rail.
221.	Hose—heater to control valve.
222.	Clip—hose and elbow.
223.	Valve—heater control.
224.	Cover—water drain.
225.	Tap—water drain.
226.	Washer—water drain.
227.	Thermostat—cylinder head.
228.	Clip—bottom hose.
229.	Cleaner assembly—air.
230.	Element and cover.
231.	Chamber—silencing.
232.	Container—oil.
233.	Stud—cleaner.
234.	Wing nut—stud.
235.	Washer—wing nut.
236.	Bracket—cleaner.
237.	Bolt—bracket to pipe.
238.	Clip—cleaner to pipe.
239.	Pipe—to cleaner.
240.	Bolt—pipe to carburetter.

connects with a horizontal oil gallery running from front to rear of the engine, from which the oil is fed to the camshaft bearings and crankshaft main bearings through drilled passages. On models with external oil filters the pump connects with the filter intake and the filter outlet is connected to the oil gallery.

Drilled passages in the crankshaft provide lubrication for the big-end bearings, the surplus oil from which splashes onto the camshaft, tappet gear, and cylinder walls.

An oil pipe connects the rear end of the main oil gallery with the oil gauge on the instrument panel. A relief valve of the non-adjustable ball type is fitted on the delivery side of the pump to deal with cases of excessive pressure.

The timing chain is well lubricated by surplus oil from the front camshaft bearing through passages which transfer it into the concave rim of the chain wheel by centrifugal action and then through radial feed holes onto the chain itself.

Section A.1

DRAINING THE ENGINE SUMP

The sump must be drained and filled with new oil at the specified intervals. The hexagon-headed drain plug

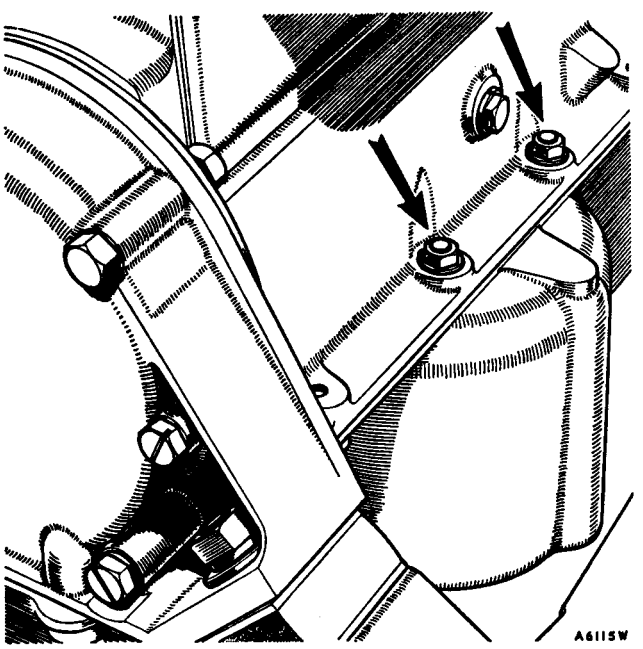

Fig. A.1

The two bolts fitted from the top of the sump flange are here shown. On later models these have been replaced by studs screwed into the sump, with nuts and spring washers for attachment

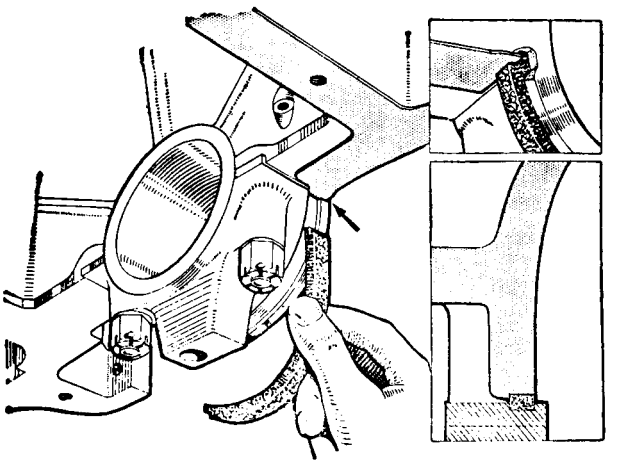

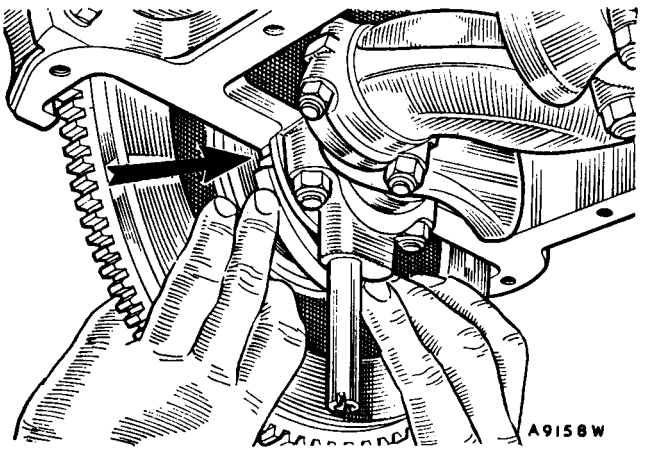

Fig. A.2

The fitting of the cork sealing strip at the rear bearing is most important to prevent oil leakage. Here is shown the correct method

is centrally situated at the rear end of the sump. The oil should preferably be drained when the engine is hot, in which condition it will flow more readily.

Unless the sump is to be removed and cleaned, it should be allowed to drain for at least 10 minutes before the drain plug is replaced. The capacity of the sump is given in **'GENERAL DATA'**.

Section A.2

REMOVAL AND REPLACEMENT OF SUMP

The sump is located by 10 $\frac{3}{16}$ in. hexagon-headed screws and spring washers inserted from the under side of the sump flange, and two screwed in from the top at

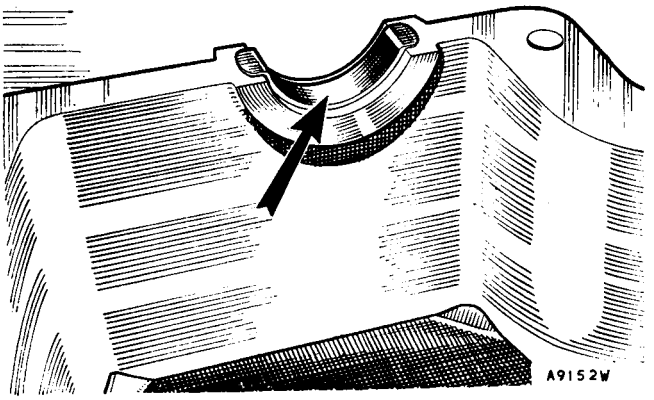

Fig. A.3

Make sure that the oil seal packing for the crankshaft at the front end of the sump is in good order and correctly positioned. The ends should be slightly proud of the gasket

either side of the oil pump housing. On later models these latter two are replaced by studs and nuts.

IMPORTANT.—Avoid displacing the hood of the oil pump when removing and replacing the sump, as any such displacement may distort or break the gasket between the hood and the pump body and so cause an air leak on the suction side, resulting in a loss of oil pressure. Should there be any doubt about the condition of the gaskets, fit new ones.

To remove the sump withdraw the 12 screws (or 10 and two stud nuts as the case may be) mentioned above and the three ¼ in. hexagon-headed bolts inserted through the flywheel housing into the sump. The sump can then be lowered from the engine if moved sufficiently to the left-hand side to clear the oil pump.

To clean the sump remove the three sump tray securing bolts, the sump tray, and the drain plug. Wash out all oil from the sump with paraffin and clean all deposit from the drain plug. Thoroughly dry the sump and refit the tray and drain plug.

When refitting the sump to the engine particular attention should be given to the three sealing gaskets. They are:

(1) The gasket on the crankcase face.
(2) The cork strip fitted into the recess in the rear main bearing cap.
(3) The packing fitted into the recess in the front of the engine sump.

If the gaskets are in good condition and have not been damaged during the removal of the sump they may be used again, but damage generally takes place and it is therefore advisable to fit new ones.

Before fitting new gaskets remove all traces of the old ones from the crankcase face, the sump face, and the recess in the rear main bearing cap. Smear the faces of the crankcase joint with a light coating of grease. Next fit the two halves of the large gasket to the crankcase face so that the holes in the gasket and crankcase register and the ends of the gasket (see arrow, Fig. A.2) fit against the side of the rear main bearing cap.

The cork strip should then be fitted tightly into the recess of the main bearing cap, taking care that the stepped ends fit the small recess (shown black in sketch) at each end of the bearing without damaging the cork.

When correctly fitted the step of the cork strip will overlap and seal the ends of the sump gaskets (see Fig. A.2). Check that all holes register correctly.

Fit the packing seal into the recess at the front end of the sump and lift the sump into position on the crankcase, taking care not to displace the cork strip while doing this.

First tighten evenly the 10 screws into the crankcase flange and the two inserted from the top into the sump flange (or nuts when studs are fitted). Then insert and tighten the three bolts that pass through the flywheel housing.

Section A.3

REMOVAL OF OIL PUMP

Drain and remove the engine sump as in Sections A.1 and A.2.

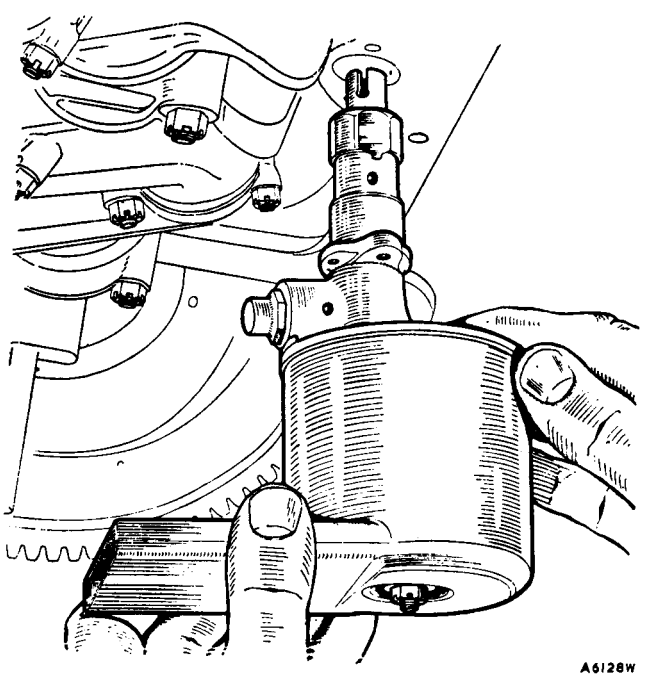

Fig. A.4

The pump may be withdrawn from the camshaft after removing the two bolts attaching it to the lower face of the crankcase. The original-type pump with body hood is illustrated

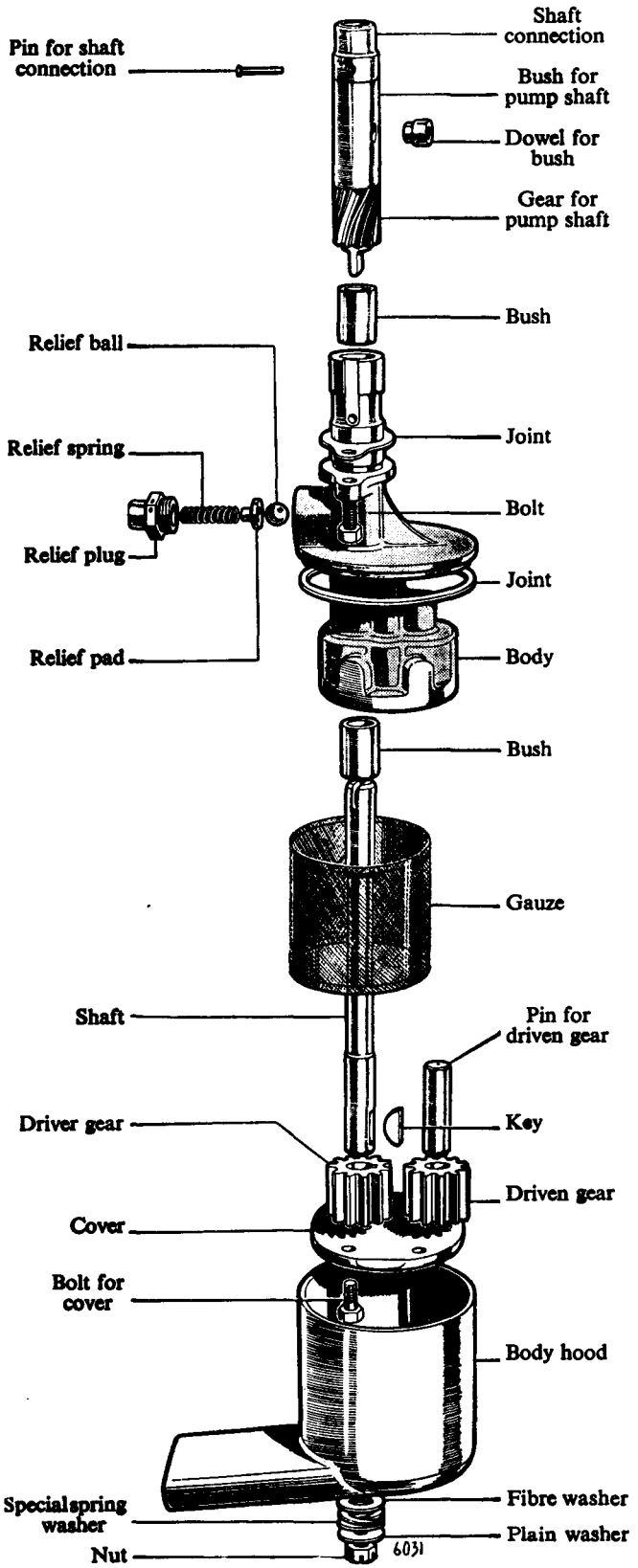

Fig. A.5

The components parts of the oil pump

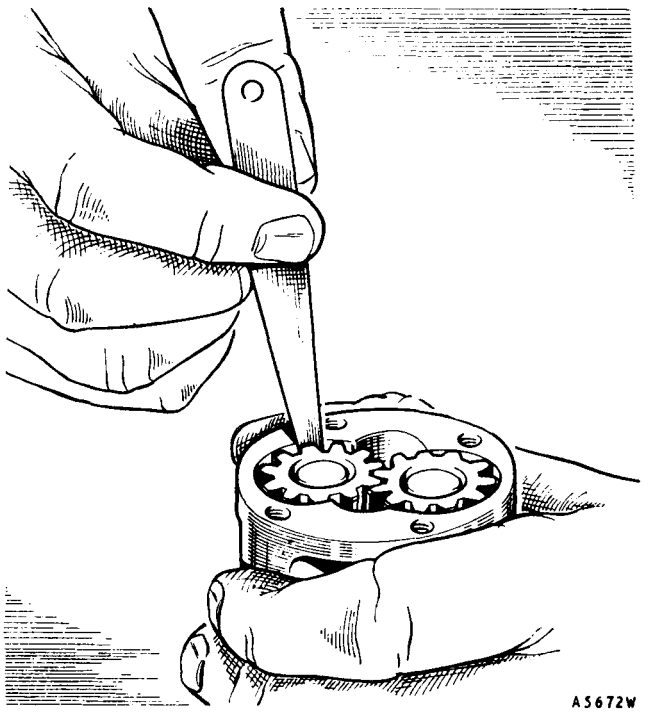

Fig. A.6

Checking the radial clearance of the pump gears with a feeler gauge

The oil pump assembly is extracted by removing the two $\frac{3}{16}$ in. hexagon-headed bolts and spring washers locating the pump to the crankcase and easing the pump

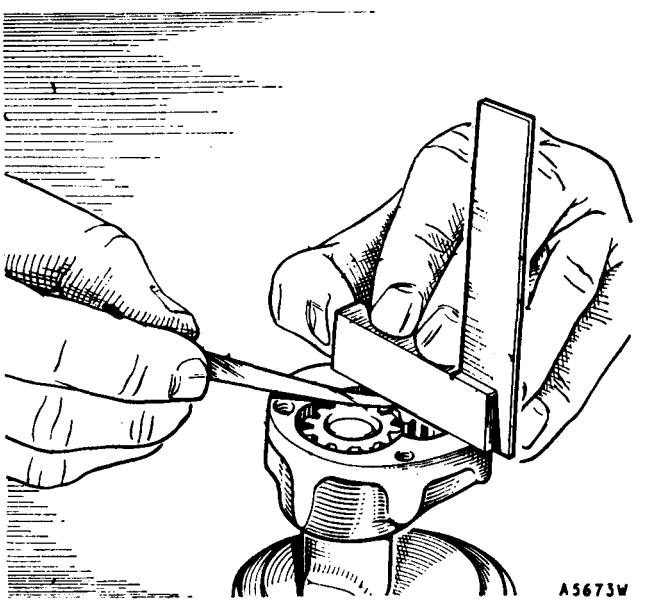

Fig. A.7

The end-float on the pump gears can be checked by means of a straight-edge and feelers

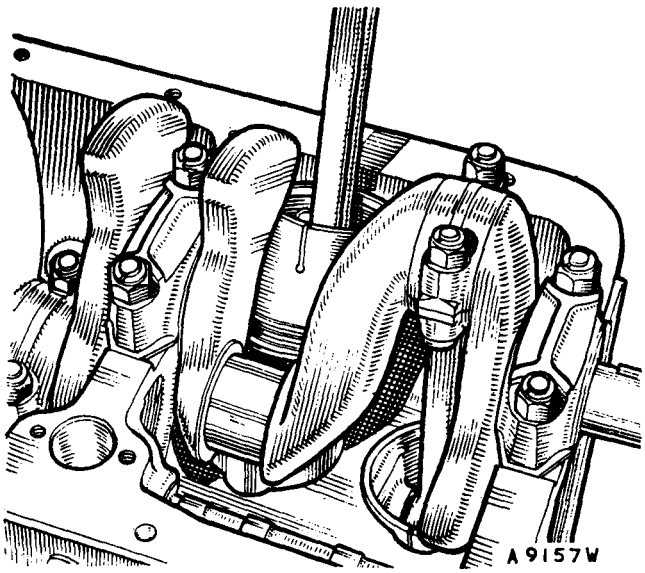

Fig. A.8

The correct method of withdrawing the piston and connecting rod assembly from the engine is here demonstrated

downwards. This is accomplished without interfering with the ignition timing.

Section A.4

DISMANTLING, REASSEMBLING, AND REPLACING OIL PUMP

The pump hood is detached by extracting the cotter pin from the fixing stud at the bottom of the pump assembly and removing the $\frac{5}{16}$ in. nut, plain steel washer, double-coil spring washer, and fibre washer. This may distort or break the gasket between the hood and the pump body and so cause an air leak on the suction side and loss of oil pressure on reassembly. Should there be any doubt about the condition of the gasket, fit a new one.

To gain access to the pump gears undo the four $\frac{5}{16}$ in. bolts with spring washers and remove the pump cover and filter gauze. The gears may now be extracted.

The oil feed from the pump is taken via the pump drive shaft into the pump body, on which is mounted the oil pressure relief valve assembly. This assembly is held in position by the relief plug (see Fig. A.5), and should be examined to ensure that the relief ball is perfectly round and that it is seating properly. Check if the relief spring has lost its tension. This can be done by measuring the length of the spring, which should not be less than 1 in. (25·4 mm.). Fit a new ball and spring if necessary.

The wire gauze oil filter which is incorporated in the oil pump should be cleaned thoroughly in petrol with a stiff brush. If damaged in any way a new gauze should be fitted. **Never use rag to clean it.**

To check the gear clearances the pump body, gears and shaft should be cleaned carefully and reassembled before carrying out the following procedure:

(1) Measure the radial clearance between the teeth of the gears and the pump body (see Fig. A.6). This should not be more than ·006 in. (·15 mm.).

(2) Check the end-float on the gears, placing a straight-edge across the face of the pump body and measuring the clearances with feelers, as shown in the illustration (Fig. A.7). This should not be more than ·003 in. (·08 mm.).

The pump is reassembled in the reverse order to dismantling. It should be observed, however, that the pump body cover is fitted with the hood-locating slot facing to the left-hand side of the engine. The hood gasket should be placed carefully in its recess on the body flange and the hood assembled so that its intake faces the right-hand side of the engine (i.e. at right angles to the crankshaft) when the assembly is refitted to the engine.

When replacing the pump assembly in the engine care must be exercised to see that the slot in the pump drive shaft is set so as to engage with the tongue on the distributor drive gear.

Section A.5

REMOVAL AND REPLACEMENT OF PISTON AND CONNECTING ROD

Drain the engine oil and remove the sump as in Sections A.1 and A.2.

Remove the oil pump as in Section A.3.

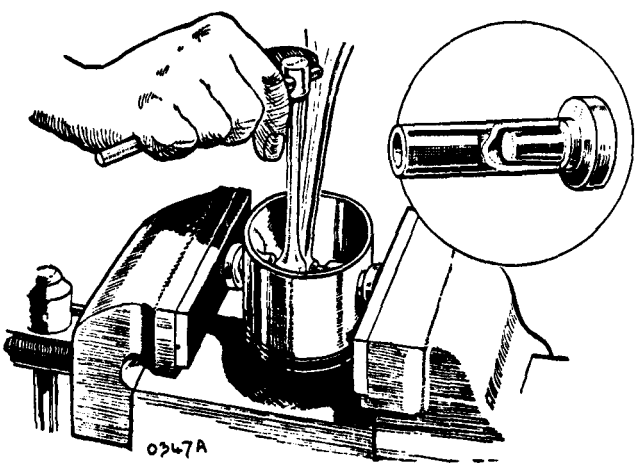

Fig. A.9

The use of special gudgeon pin plugs to hold the connecting rod and piston assembly while the gudgeon pin clamp bolt is tightened or loosened is essential

Remove the cotter pins and ¼ in. nuts from the big-end bolts (later models are fitted with self-locking nuts).

Withdraw the big-end bolts and bearing caps.

Release the connecting rod from the crankshaft.

Refit the bearing cap with the numbered side registering with the corresponding number on the connecting rod.

Rotate the crankshaft slowly and draw out the piston and connecting rod assembly down the right-hand side of the engine.

Replacement of the pistons and connecting rods is a direct reversal of the above, but the piston ring gaps should be set at 120° to each other.

An ample chamfer is given to the base of each cylinder bore to facilitate the refitting of the pistons and rings, and no difficulty should be experienced in replacement.

It is essential that the connecting rod and piston assemblies should be replaced in their own bores and fitted the same way round, i.e. with the gudgeon pin clamp screw on the opposite side to the camshaft.

NOTE.—The illustrations on pages A.2 and A.4 are intended for parts identification only.

Section A.6

DISMANTLING AND REASSEMBLING PISTON AND CONNECTING ROD

Before the piston and gudgeon pin can be dismantled from the connecting rod it is necessary to remove the clamp screw. To enable the assembly to be held in a vice for this operation without distorting the piston special holding plugs should be inserted in each end of the gudgeon pin (see Fig. A.9).

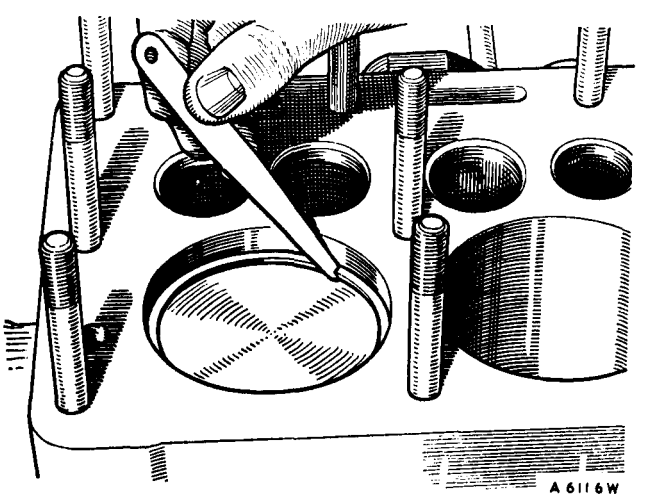

Fig. A.10

Piston ring gaps should always be measured while the ring is firmly held on top of a piston inserted in the cylinder bore

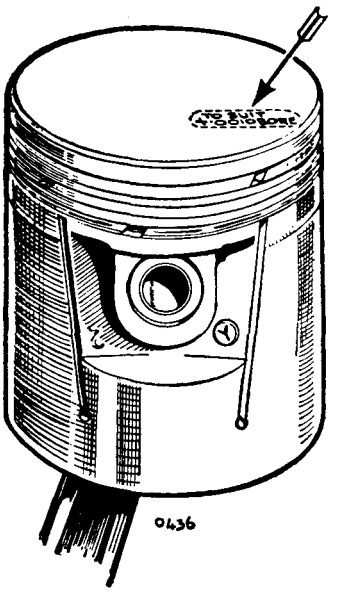

Fig. A.11

The marking on the piston crowns which indicates their size

Unscrew the gudgeon pin clamp screw (Service tool 18G 326) and remove it completely.

Push out the gudgeon pin.

Reassembly is a reversal of the above.

IMPORTANT.—Attention must be given to the following points when assembling the piston to the connecting rod:

(1) That the piston is fitted the same way round on the connecting rod.

(2) That the gudgeon pin is a correct fit in the piston. It should be a thumb-push fit for three-quarters of its travel and capable of being driven home by light tapping with a raw-hide mallet (see Section A.8).

(3) That the gudgeon pin is positioned in the connecting rod so that its groove is in line with the clamp screw hole.

(4) That the clamp screw spring washer has sufficient tension.

(5) That the clamp screw will pass readily into its hole and screw freely into the threaded portion of the little end, also that it is firmly tightened down on the spring washer.

Section A.7

REMOVAL AND REPLACEMENT OF PISTON RINGS

If no special piston ring expander is available use a piece of thin steel such as a suitably ground hacksaw blade or a disused ·020 in. (·50 mm.) feeler gauge.

Raise one end of the ring and insert the steel strip between the ring and the piston. Rotate the strip round the piston, applying slight upward pressure to the raised

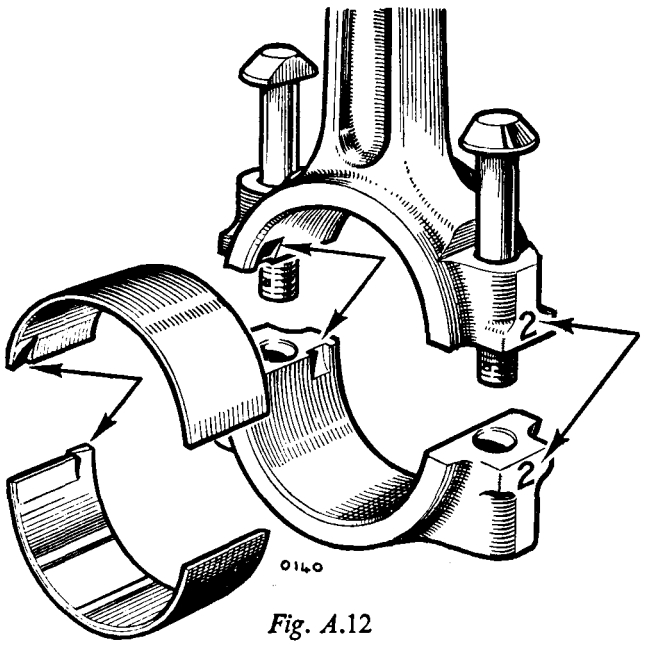

Fig. A.12

Clearly shows the location of the registering tags on the edge of each bearing shell and the identification markings on the connecting rod and cap

portion of the ring until it rests on the land above the ring groove. It can then be eased off the piston.

Do not remove the piston rings downwards over the skirt of the piston.

Before fitting new piston rings the grooves in the piston must be scraped clean of any carbon deposit, taking care not to remove any metal, since play between the ring and the groove reduces gas-tightness and produces a pumping action leading to excessive oil consumption.

IMPORTANT.—New rings should be tested in the cylinder bore to ensure that the ends do not butt together.

To do this effectively the piston should be inserted approximately 1 in. (2·54 cm.) down the cylinder bore and each ring then pushed down onto the top of the piston and held there in order to keep the ring square with the bore. The correct ring gap is from ·0025 to ·0065 in. (·06 to ·17 mm.).

When in position in the piston groove the ring must move round quite freely, but there must be no movement in a vertical direction.

Section A.8

FITTING GUDGEON PINS

When gudgeon pins are fitted to pistons a certain amount of selective assembly may be necessary, and the following points should be observed.

With the standard aluminium-alloy pistons the gudgeon pins must be a thumb-push fit for three-quarters of their travel, being finished by lightly tapping with a raw-hide mallet, this with the piston cold. Never attempt to ream out a gudgeon pin bore, as oversize gudgeon pins are not available or permissible.

Section A.9

PISTON SIZES AND CYLINDER BORES

When fitting new pistons selective assembly is necessary, and to facilitate this the pistons are stamped with identification figures on their crowns. These figures should correspond with the similar figures stamped on the bottom face of the crankcase on the oil pump side to indicate each cylinder bore size. The pistons are also graded for weight and are stamped accordingly on their crowns. It is advisable to fit pistons of the same weight grading to an engine to ensure the correct balance.

Symbols are used to indicate the actual measurements, the bores being marked:

'To suit std. bore', indicating a standard size diameter possessing the actual nominal measurement of 57 mm. (2·2441 in.);

'To suit bore +·0010', indicating an oversize of +·0010 in. (·025 mm.) on the standard size and thus having an actual measurement of 2·2451 in. (57·025 mm.), and so on through the range of sizes permitted.

The pistons are marked with the actual cylinder bore size, the requisite running clearance being allowed for in the machining.

While the cylinder head and pistons are withdrawn the cylinder bores should be measured for wear.

Indication that a rebore of the cylinders is necessary

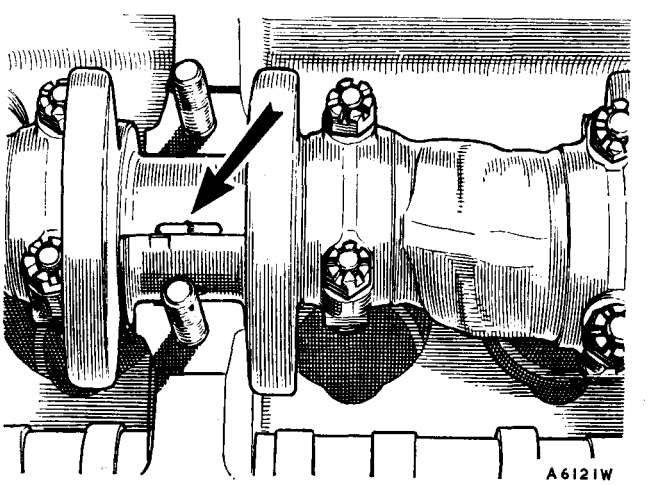

Fig. A.13

Demonstrating the use of a split pin for removal and replacement of the main bearing shells

is given by general loss of performance, oiling up, and poor compression. The pistons are supplied graded in the same way as the cylinder bores, and those marked to suit +·0010 bore should be fitted to bores marked +·0010, and so on throughout the range.

Pistons are supplied in the following sizes:

STANDARD		
Piston marking	*Suitable for bore size*	*Equivalent metric size*
To suit standard bore	2·2441 to 2·24459 in.	57·000 to 57·013 mm.
To suit +·0010 bore	2·2451 to 2·24559 in.	57·025 to 57·038 mm.
To suit +·0020 bore	2·2461 to 2·24659 in.	57·051 to 57·064 mm.
FIRST OVERSIZE		
To suit +·020 bore	2·2641 to 2·26459 in.	57·508 to 57·521 mm.
To suit +·0210 bore	2·2651 to 2·26559 in.	57·535 to 57·547 mm.
To suit +·0220 bore	2·2661 to 2·26659 in.	57·559 to 57·572 mm.
SECOND OVERSIZE		
To suit +·040 bore	2·2841 to 2·28459 in.	58·016 to 58·029 mm.
To suit +·0410 bore	2·2851 to 2·28559 in.	58·042 to 58·056 mm.
To suit +·0420 bore	2·2861 to 2·28659 in.	58·067 to 58·079 mm.

Section A.10

REMOVAL AND REPLACEMENT OF MAIN AND BIG-END BEARINGS

The replacement of both main and big-end bearings can be carried out without withdrawing the engine from the frame. Detachable bearing caps and steel-backed liners are used both for the main and the big-end bearings, which are of the shimless type and are therefore non-adjustable.

Dismantling procedure

Drain the engine oil and remove the sump as in Sections A.1 and A.2.

Remove the oil pump as in Section A.3.

As the bearings are of the shimless type it is essential that no attempt should be made to adjust worn bearings. They should be replaced with new parts. Similarly, if the crankshaft journals are found to be in a worn condition it is advisable to fit a service reground crankshaft, complete with main and big-end bearings, as supplied by the Works (see Section A.25).

Both the main and big-end bearing liners are located in position in the bearing housings by a small tag on one side of each half-liner, and it should be noted that the bearings are fitted so that the tags come on the same joint edge of the bearing housing as shown in Fig. A.12, although on opposite corners.

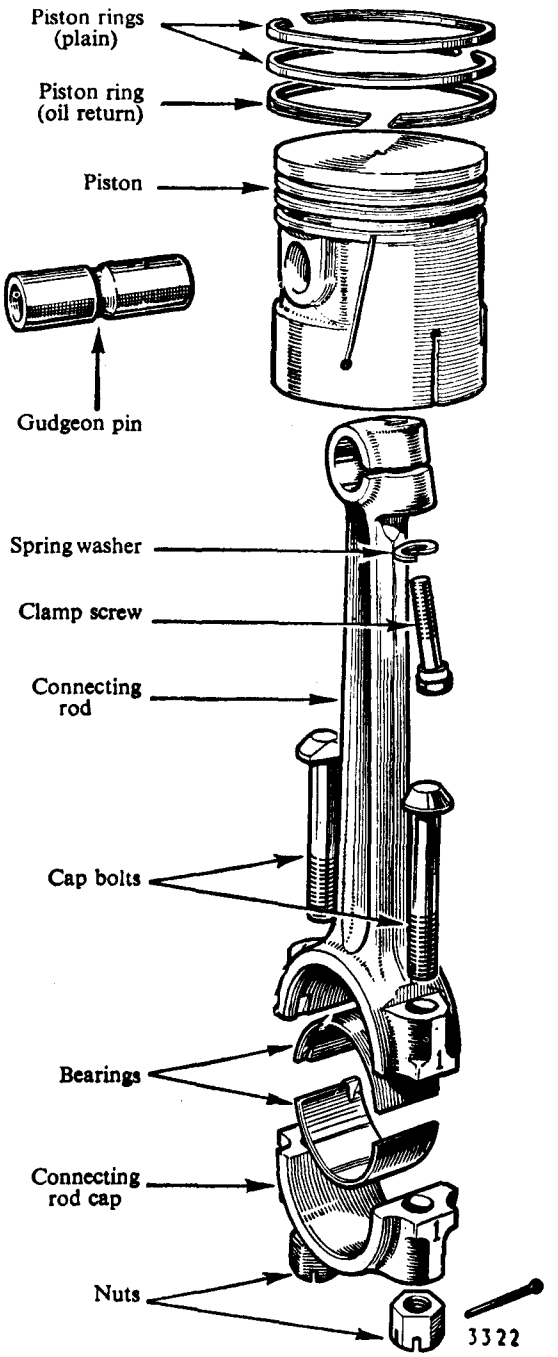

Fig. A.14

The component parts of the piston and connecting rod assembly. Later models have self-locking nuts for the cap bolts which eliminate the split pins

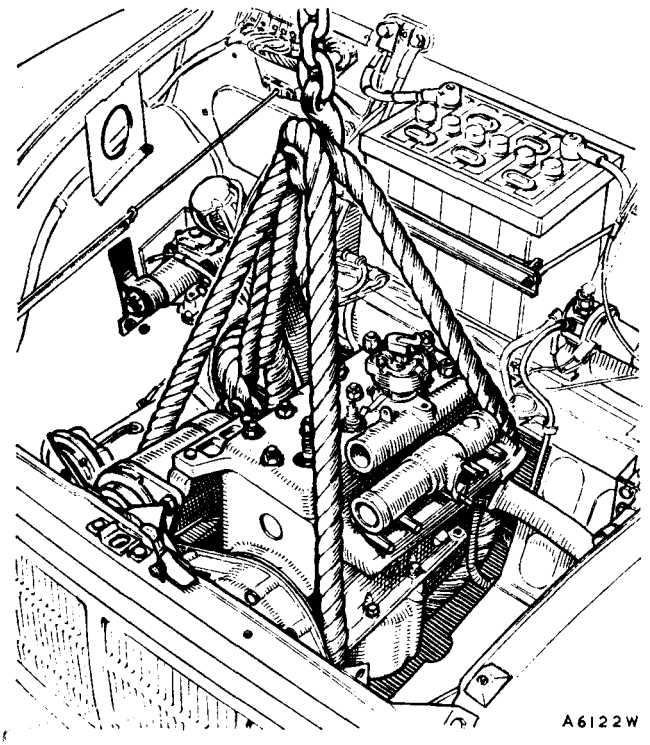

Fig. A.15
The engine supported on a suitable rope sling for removal

To detach the big-end bearings extract the split pins from the big-end bolts (later models are fitted with self-locking nuts needing no special locking precautions), and undo the ¼ in. castellated nuts. Remove the connecting rod caps and extract the bearings. Care should be exercised to see that the bearing journals, etc., are thoroughly cleaned before installing new bearings. No scraping is required as the bearings are machined to give the correct diametral clearance.

The main bearings should be dealt with one at a time. Early models have split-pinned bearing cap nuts—later models are fitted with self-locking nuts. Detach the main bearing caps, together with the bottom half-bearing liner. The top halves of the bearing liners are extracted by rotating them round the crankshaft in the direction of their locating tags, using a split pin opened out and inserted in the crankshaft oil feed holes to facilitate this if necessary. The replacements are fitted in a similar manner by first inserting the plain side of each bearing liner into its housing. Here again no scraping is required as the bearings are machined to give the correct diametral clearance.

In the case of a 'run' bearing it is always essential thoroughly to clean out all the oilways in the crankshaft and block, wash out the engine base with paraffin, and remove the pump cover to ensure that no particles of white metal are left anywhere in the lubricating system.

Do not forget to split-pin the cap nuts in the case of engines employing castellated nuts.

Section A.11

REMOVAL AND REPLACEMENT OF ENGINE

There is no difficulty in removing the engine, leaving the gearbox in the frame, if the work is carried out in accordance with the following sequence. It is not necessary to remove the bonnet, but the clevis pin securing the bonnet prop to the bonnet lid must be removed and the bonnet secured carefully in the open position.

Drain the oil from the engine.

Drain the water from the radiator by means of the drain tap located in the right-hand side of the radiator bottom tank. If Bluecol or other anti-freeze mixture is in use it should be drained into a suitable clean container by fitting a rubber extension pipe to the drain tap and carefully preserved for future use.

Disconnect the battery by removing the flexible lead from the negative terminal.

Release the clips on the top and bottom water hoses and separate the hoses from their connections.

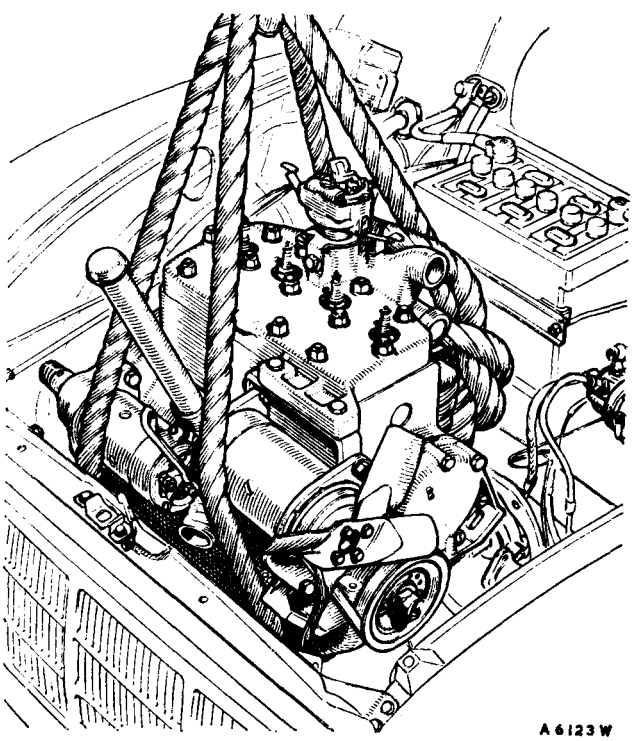

Fig. A.16
Withdrawing the engine from the car

Remove the four $\frac{1}{4}$ in. bolts and spring washers securing the radiator to the cowl and lift out the radiator.

Disconnect the throttle and mixture controls from the carburetter, and release the throttle control wire steady bracket from its attachment on the cylinder head by removing the fixing bolt.

Release the flexible petrol pipe from the $\frac{5}{16}$ in. union on the pump and detach the carburetter from the manifold.

Disconnect the high-tension cables from the sparking plugs and the low-tension cable from the distributor. Remove the two leads from the dynamo and lift off the distributor cap with wires attached. Detach the starter cable from the starter motor by undoing the terminal nut with spring washer. Disconnect the earth cable from the cylinder head.

Disconnect the oil gauge pipe from its connection on the cylinder block and release it from the clip on the tappet cover. Remove the two $\frac{1}{4}$ in. nuts, bolts, and spring washers from the exhaust manifold flange and remove the flange gasket.

Remove the two $\frac{5}{16}$ in. nuts and washers securing the front engine mountings to the timing cover and the four $\frac{1}{4}$ in. nuts and bolts securing the mounting support brackets to the frame.

Support the engine with suitable lifting tackle. If a lifting ring is employed it should form part of a plate which can be fitted under two of the stud nuts. Raise the front end of the engine with the lifting tackle and remove the front engine mounting rubbers and support brackets.

Remove the front floor carpet. Unscrew the gear lever knob from the gear lever after slackening the locknut and remove the rubber cowl.

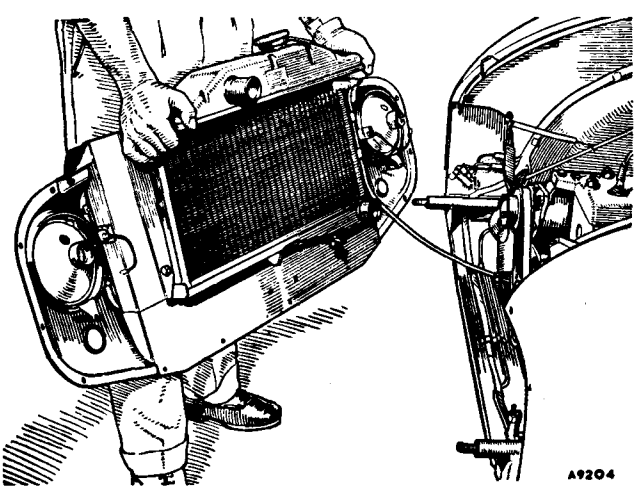

Fig. A.17

The radiator and grille assembly can be withdrawn as a unit

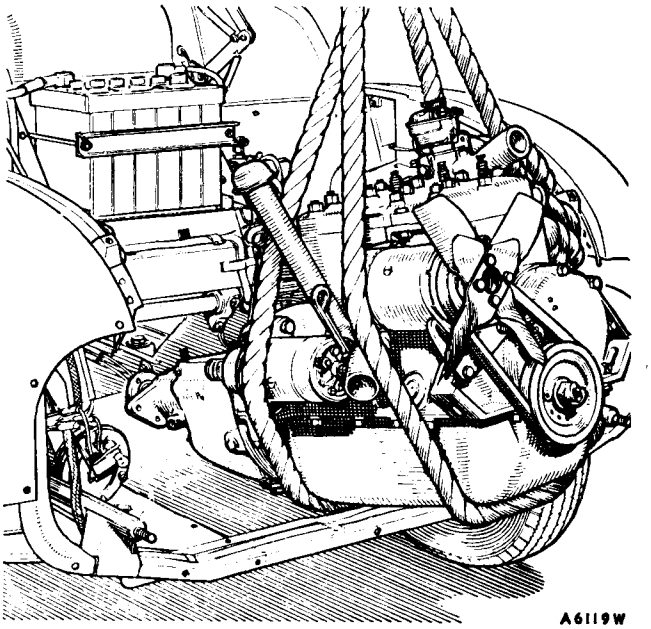

Fig. A.18

Withdrawing the power unit complete with gearbox

Remove the gearbox cover-plate. This is secured by $\frac{3}{16}$ in. brass bolts.

Note that two bolts on each side of the gearbox are longer than the remainder and secure the gearbox support member to the frame.

Lower the engine until it is possible to slacken and remove the four short $\frac{1}{4}$ in. hexagon-headed bolts locating the clutch housing to the cylinder block and the three longer $\frac{1}{4}$ in. hexagon-headed bolts locating the clutch housing to the sump housing.

To prevent the gearbox from dropping when it is released from the engine, place a suitable support beneath the gearbox housing.

Move the engine forward clear of the clutch and then lift upwards over the radiator grille, turning it at right angles to clear the battery box.

When replacing the engine in the frame it will be found helpful if a second operator raises the front end of the gearbox by exerting downward pressure on the gear lever while in gear. If the car is then moved forward steadily this will assist in aligning the gearbox drive shaft with the clutch and flywheel.

Ensure that the clutch casing is located on the two dowel pins in the flywheel housing, and then lower the front end of the power unit until the seven bolts locating the clutch casing to the flywheel housing can be replaced and tightened. Make sure that the correct length of bolt is used in each case.

Raise the engine and insert the front engine mounting rubbers and brackets.

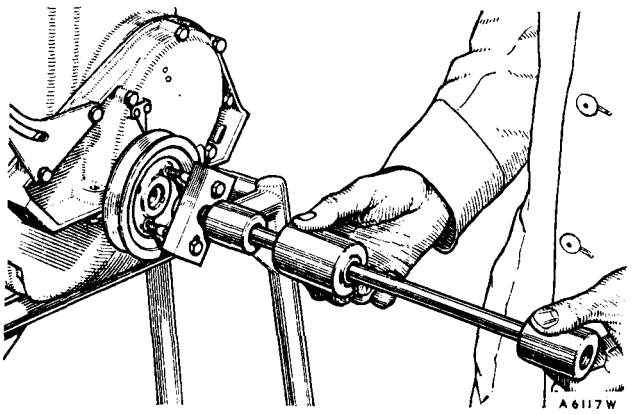

Fig. A.19

The special impulse extractor attachment for Service tool 18G 374 in position for extraction of the crankshaft pulley

Lower the engine onto the rubbers.

The replacement operation now continues in the reverse manner to the removal procedure.

Refill the engine with oil to Ref. A (page P.2).

Section A.12

REMOVAL AND REPLACEMENT OF POWER UNIT

The removal of the power unit does not present any serious difficulty if the operations are carried out in the following sequence. It is not necessary to remove the bonnet, but the clevis pin securing the prop to the bonnet lid must be removed and the bonnet secured safely in the open position.

Remove the front bumper assembly by unscrewing the two nuts securing it to the frame.

Drain the oil from the engine and gearbox.

Drain the water from the radiator by means of the drain tap located in the right-hand side of the radiator bottom tank. If Bluecol or other anti-freeze mixture is in use it should be drained into a suitable clean container and carefully preserved for future use, using a rubber extension pipe on the tap.

Disconnect the battery by removing the flexible lead from the negative battery terminal. Disconnect the cable from the starter motor.

Release the radiator mask by removing the nuts and spring washers securing the grille surround to each wing.

On earlier models with combined head and pilot lamps turn the bulb holder in an anti-clockwise direction and withdraw it from the back of the lamp unit. Withdraw the main bulb from its holder and disconnect the earth wire from the terminal below the bulb carrier.

On later models with separate sidelamps it is necessary to release the sidelamps from the grille panel by removing the glass and withdrawing the three attachment screws.

Undo the seven nuts and bolts securing the lower edge of the grille panel to the frame.

Release the clips from the top and bottom water hoses and separate the hoses from their connections.

Disconnect the bonnet lock tensioner spring and withdraw the split pin and flat washer from the forward end of the bonnet catch operating rod. Remove the two $\frac{3}{16}$ in. nuts and bolts securing the radiator top rail to each wing.

Lift out the radiator and grille assembly.

Detach the throttle return spring from the air intake pipe and remove the air silencer and air intake pipe assembly by undoing the $\frac{3}{16}$ in. bolt and spring washer from the air cleaner support bracket and the two $\frac{1}{4}$ in. bolts with spring washers locating the air intake pipe to the carburetter flange.

Disconnect the throttle and mixture control from the carburetter and release the throttle control steady bracket from its attachment on the cylinder head by undoing the $\frac{3}{16}$ in. fixing bolt.

Release the flexible petrol pipe from the pump and detach the carburetter from the manifold.

Disconnect the high-tension cables from the sparking plugs and the low-tension cable from the distributor. Remove the two leads from the dynamo and lift off the distributor cap with the wires attached. Detach the starter cable from the starter motor by undoing the terminal nut with spring washer. Detach the earth cable from the cylinder head.

Disconnect the oil gauge pipe from its connection on the cylinder block and release it from the clip on

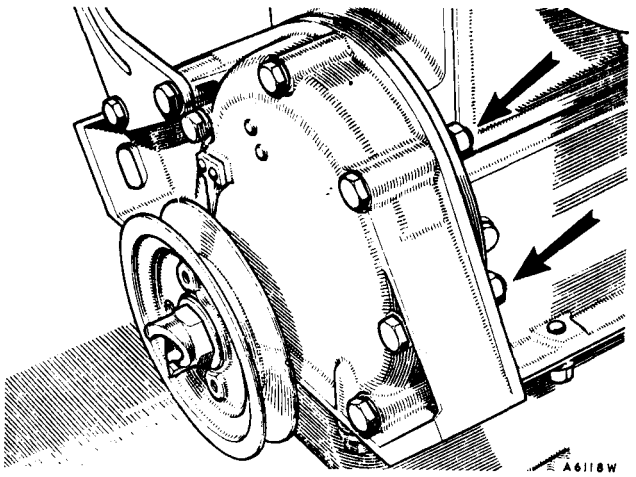

Fig. A.20

The location of the two $\frac{1}{4}$ in. bolts with retaining nuts at the back of the engine bearer

the tappet cover. Remove the two $\frac{5}{16}$ in. nuts, bolts, and spring washers from the exhaust manifold flange and remove the flange gasket.

Remove the front floor mat and remove the left-hand-side front seat by undoing the four $\frac{1}{4}$ in. bolts and clips locating the seat to the floor of the car.

Unscrew the gear lever knob from the gear lever after slackening the locknut and remove the gearbox rubber cowl.

Remove the gearbox cover-plate and floorboards by undoing the $\frac{3}{16}$ in. brass bolts securing them. Note that the two bolts on each side of the gearbox tunnel are longer than the rest and screw into the gearbox support member.

Disconnect the speedometer cable from the drive assembly at the rear of the gearbox.

Extract the split pin and anti-rattle washer from the clutch operating lever link and disconnect the link from the lever.

Unscrew the nuts from the four $\frac{1}{4}$ in. bolts on the front universal joint driving flange and remove the bolts. The nuts are of the patent self-locking type.

Remove the gearbox cover, care being exercised to ensure that the three selector lock balls and their springs in the rear wall of the box are not lost in the process or dropped into the box. Place a temporary protecting cover over the gearbox to exclude any foreign matter.

Support the engine with suitable lifting tackle. If a lifting ring is employed it should form part of a plate which can be fitted under **two** of the stud nuts.

Undo the two bolts securing each mounting rubber to the gearbox casing. Remove the two $\frac{5}{16}$ in. nuts and washers securing the front engine mounting rubbers to the timing cover.

The power unit may now be raised and manœuvred forward clear of the car.

Reassembly is carried out in the reverse order to that of dismantling.

Refill the engine and gearbox with oil to Refs. A and B (page P.2).

Section A.13

REMOVAL OF TIMING COVER

To carry out this operation with the engine in the frame it is necessary to remove the radiator core and grille assembly as in Section A.12, and the fan belt.

Release the engine from its forward mounting rubbers by removing the two $\frac{5}{16}$ in. nuts and washers.

Support the front of the engine with suitable lifting tackle.

Removing the timing cover

Remove the starting-handle dog nut, washer, and shims, taking care of the shims to ensure their replacement.

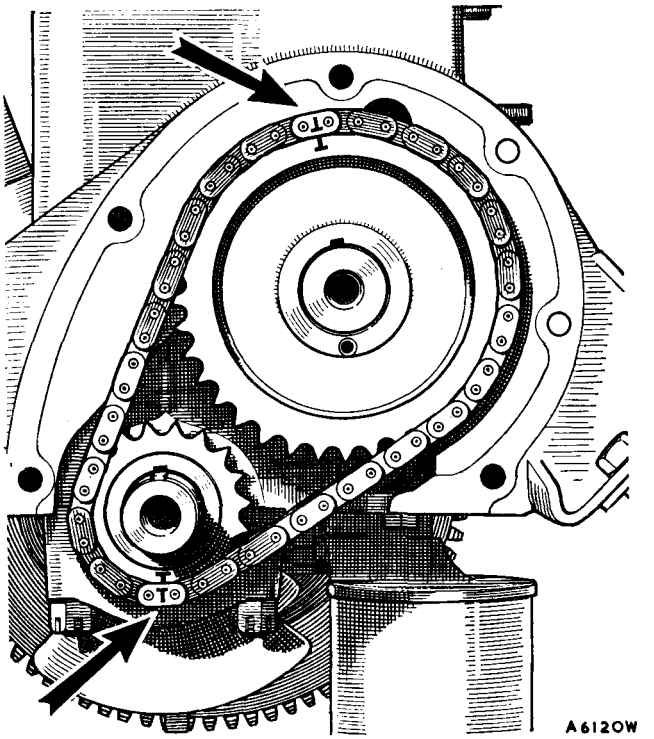

Fig. A.21

This clearly shows the position of the marked teeth on the sprockets and bright links on the timing chain when set correctly for the replacement of the timing chain

Remove the crankshaft fan pulley with a suitable extractor (Service tool 18G 374, with attachment 18G 374 A).

Remove the six $\frac{1}{4}$ in. bolts securing the timing cover to the cylinder casting, observing that the two near-side bolts do not actually screw into the casting, but are provided with $\frac{1}{4}$ in. nuts.

Remove the two $\frac{3}{16}$ in. bolts locating the timing cover to the sump.

Remove the timing cover.

IMPORTANT.—Care should be exercised to ensure that the sump gasket is not damaged during removal of the timing cover. If it is damaged the sump must be removed and the gasket replaced by a new one.

Section A.14

REPLACEMENT OF TIMING COVER

To ensure oil-tight joints it is essential:

(1) That a new gasket is fitted between the cleaned faces of the timing cover and the engine.

(2) That a new timing case top packing is fitted.

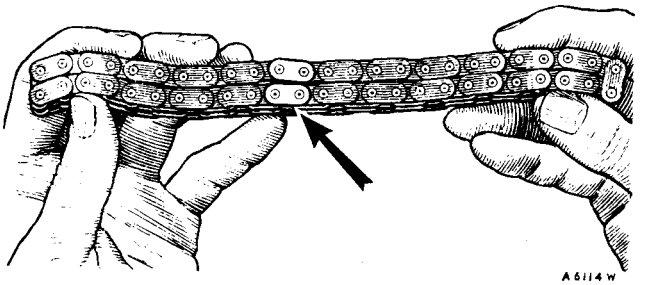

Fig. A.22

The bright links of the timing chain brought together prior to chain replacement

(3) That the sump gasket is not damaged and is smeared with grease.

The following points also need special attention:

(4) That the oil thrower is in position on the crankshaft, with its concave side forward.

(5) That the fan driving pulley key is in position.

(6) That the spacing shims for the starting-handle dog nut are replaced.

Place the timing cover in position, first locating all the securing bolts and nuts loosely and then tightening them up.

Examine the new timing case top packing and fan driving pulley key to ensure that they are fitted correctly. Slide the fan driving pulley home on the shaft.

Replace the starting-handle dog nut shims, washer, dog nut, and radiator assembly.

Section A.15

REMOVAL AND REPLACEMENT OF TIMING CHAIN

To carry out this operation with the engine in the frame it is necessary to drain and remove the radiator, complete with the radiator case, as detailed in Section A.12, to remove the timing cover, as detailed in Section A.13, and to support the engine before the timing cover has been removed.

Drain and remove the sump as detailed in Sections A.1 and A.2.

Remove the dished oil thrower washer from the front of the crankshaft, having noted that it is fitted with its concave side forward.

Tap back the lock washer from the $\frac{3}{8}$ in. set screw locating the camshaft sprocket and remove the screw, together with the lock washer and plain steel washer.

The timing chain and sprockets are now extracted by easing each chain wheel forward a fraction at a time with suitable small levers.

Replacement

When replacing the timing chain set the camshaft with its keyway approximately 7° B.T.D.C. and the crankshaft with its keyway at T.D.C.

Double the timing chain, bringing both bright links together. This gives a long and short portion of the chain on either side of the bright links.

With the shorter part of the chain on the left (the bright links facing the operator) and the longer on the right, engage the camshaft sprocket tooth marked 'T' with the top bright link and the crankshaft sprocket with the tooth marked 'T' coinciding with the other bright link.

Place the sprockets in their respective positions on the camshaft and crankshaft complete with the chain and push the assembly home. Carefully keep the sprockets in line with each other all the time to avoid straining the chain.

When replaced in the engine the bright links and the marked teeth should take up the positions shown in Fig. A.21.

The engine valve timing is such that with the engine cold and the valve clearance set at ·018 in. (·46 mm.) the inlet valves open 8° B.T.D.C. and close 52° A.B.D.C. The exhaust valves open 52° B.B.D.C. and close 20° A.T.D.C.

Reassembly of the remaining parts is carried out in the reverse order to that of dismantling.

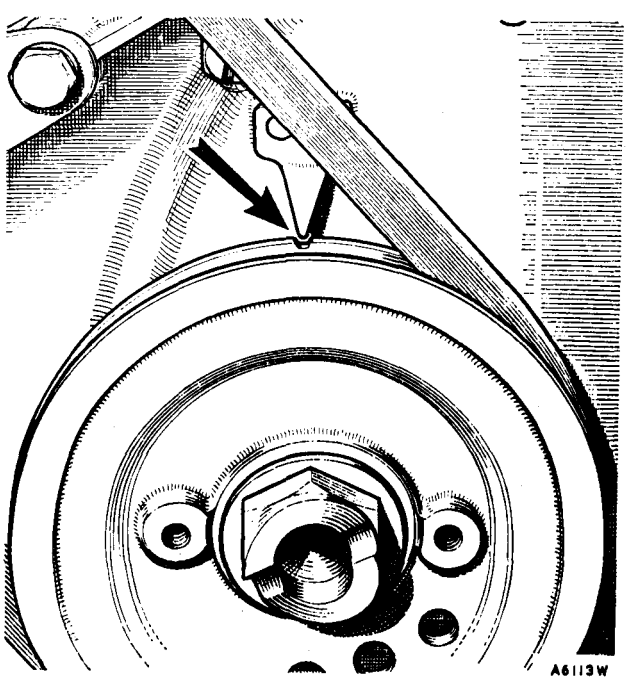

Fig. A.23

The timing marks on the chain case and crankshaft pulley which coincide when No. 1 piston is at T.D.C.

Section A.16

REMOVAL AND REPLACEMENT OF CARBURETTER

Detach the throttle control return spring from the air intake pipe.

Detach the air intake silencer (or cleaner) bracket from the cylinder head by unscrewing the $\frac{3}{16}$ in. bolt equipped with a spring washer, and unscrew the two $\frac{1}{4}$ in. fixing bolts and spring washers attaching the intake pipe to the carburetter flange. The air intake pipe complete with silencer or cleaner may now be removed.

Disconnect the mixture control from the carburetter by removing the $\frac{3}{32}$ in. split pin and flat washer from the clevis pin on the inner cable and slackening the clip on the outer cable.

Disconnect the throttle control from the carburetter by removing the $\frac{3}{32}$ in. split pin from the clevis pin locating it to the throttle spindle.

Release the flexible petrol pipe at the $\frac{5}{16}$ in. union nut on the petrol pump.

Remove the two $\frac{3}{16}$ in. nuts and spring washers holding the carburetter to the inlet manifold and remove the carburetter.

Refitting of the carburetter is a reversal of the above procedure, but if the carburetter flange is damaged the respective faces should be cleaned, levelled, and a new gasket fitted.

Section A.17

REMOVAL AND REPLACEMENT OF INLET AND EXHAUST MANIFOLD

Remove the air silencer (or cleaner) and carburetter as detailed in Section A.16.

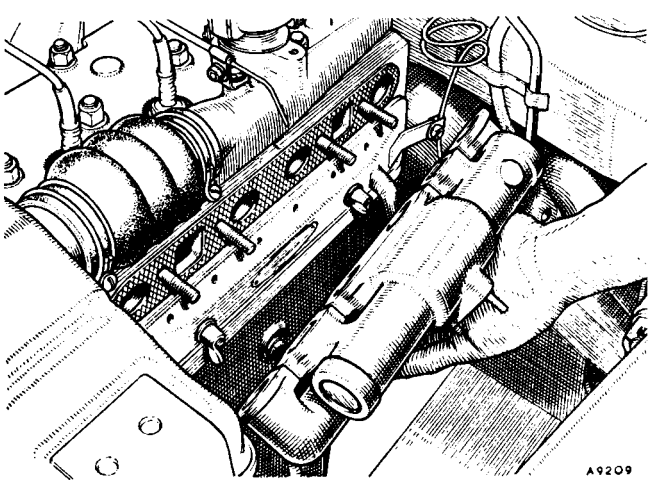

Fig. A.24

Withdrawing the induction and exhaust manifold

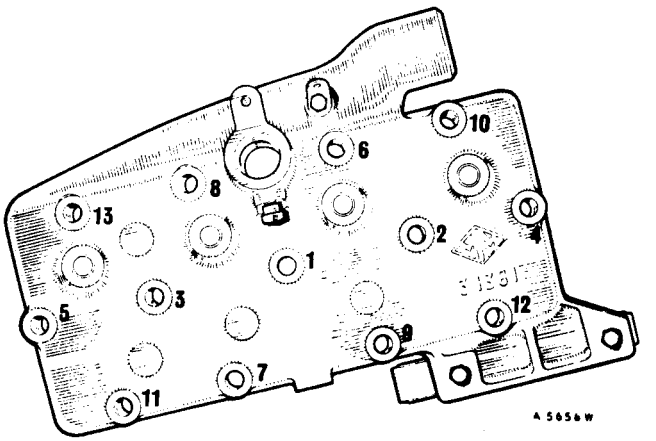

Fig. A.25

The correct order of loosening and tightening the cylinder head stud nuts

Release the exhaust pipe from the manifold by removing the two $\frac{5}{16}$ in. bolts, spring washers, and nuts, observing that a copper-asbestos gasket is fitted between the two flanges. Remove the manifold by unscrewing the four $\frac{1}{4}$ in. elongated stud nuts.

Refitting the manifold is a reversal of the above procedure, but before doing so any excessive carbon should be cleaned from the faces and a new gasket fitted with its perforated side away from the cylinder block and in contact with the manifold.

Section A.18

REMOVAL AND REPLACEMENT OF CYLINDER HEAD

Raise the bonnet of the car. Remove the split pin from the clevis pin securing the prop to the bonnet lid and secure the lid in the open position, using a suitable piece of cord attached to some convenient point.

Drain the water from the cooling system by means of the drain tap located on the right-hand side of the radiator bottom tank. If Bluecol or other anti-freeze mixture is in use it should be drained into a suitable clean container and carefully preserved for future use, using a rubber tube extension on the drain tap.

Disconnect the negative cable from the battery by extracting the terminal screw and removing the cable lug from the battery terminal.

Release the clips from the top water hose and separate the hose from its connections.

Disconnect the low-tension wire from its terminal on the side of the distributor. Slacken the $\frac{1}{4}$ in. dynamo attachment bolt providing belt tension adjustment, together with its plain steel washer. Remove the two $\frac{1}{4}$ in. bolts, nuts, and spring washers locating the dynamo to its bracket on the cylinder head on early models. In

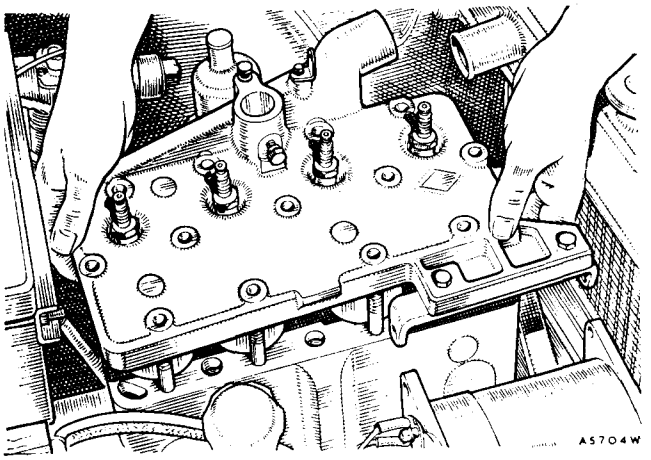

Fig. A.26
Raising the cylinder head

the case of later models the dynamo support bracket is cast with the cylinder block and there is no need to disturb the dynamo for cylinder head removal.

Disconnect the high-tension wires from the sparking plugs; extract the lock wire from the dowel bolt locating the distributor clamp plate assembly to the cylinder head on early models and remove the bolt. If the pinch-bolt on the clamp plate assembly is not disturbed the ignition setting will not be altered. On later models mark the distributor body and the face of the housing to enable the distributor to be replaced in the same position, release the cotter bolt nut, and gently tap back the cotter bolt to release the distributor. The distributor assembly may now be withdrawn from the cylinder head.

Detach the air intake silencer (or cleaner) from the cylinder head by unscrewing the $\frac{3}{16}$ in. attachment bolt and remove the air silencer (or cleaner) by slackening the screw in the clip retaining it to the air intake pipe.

Remove the throttle control bracket from the cylinder head by undoing the $\frac{3}{16}$ in. set screw with shakeproof washer, and release the controls from the carburetter throttle lever by removing the $\frac{3}{32}$ in. (2·5 mm.) cotter pin from the clevis pin.

Undo the 13 $\frac{5}{16}$ in. cylinder head stud nuts and slacken each half a turn at a time until they are all quite free. This will avoid any tendency for the head to be distorted. Observe that the engine earthing cable is located under the rearmost nut. The cylinder head may now be lifted clear of the studs and placed aside for cleaning.

Extract the distributor drive shaft from its housing. Its drive tongue is offset to ensure that it is replaced correctly without disturbing the timing.

The cylinder head gasket should be examined carefully and if damaged in any way should be replaced by a new one. No jointing is required with a new gasket.

The gasket should be guided over the cylinder head studs evenly to avoid damage. A piece of tubing or a box spanner is useful for this purpose.

To ensure the correct alignment of the distributor shaft tunnel in the head and in the cylinder block when refitting the cylinder head the distributor shaft itself must be used.

The distributor shaft must be inserted in the distributor shaft housing in the cylinder head and in the cylinder block before the head is tightened down. The cylinder head studs should then be tightened, half a turn at a time, in the sequence shown in the illustration (Fig. A.25) until they are all quite tight. The tool should then be extracted and the distributor drive shaft placed in position.

Reassembly of the remaining parts takes place in exactly the reverse order to that of dismantling.

Run the engine until it is properly warmed up, then tighten the cylinder head nuts again in the proper sequence.

Section A.19

REMOVAL AND REPLACEMENT OF CAMSHAFT

With the engine in the car it is necessary to remove the radiator grille and the radiator assembly as detailed in Section A.12.

Undo the two $\frac{5}{16}$ in. engine mounting nuts and support the engine so that the timing cover may be removed.

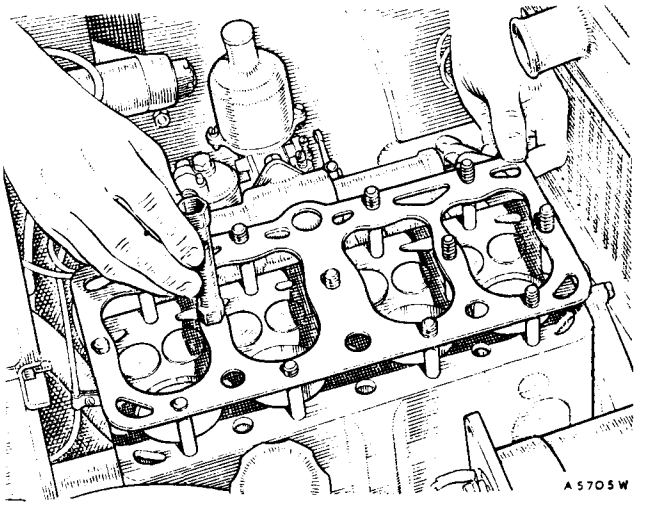

Fig. A.27
Replacing the cylinder head gasket with the help of a box spanner to avoid distortion

Slacken the $\frac{3}{16}$ in. pinch-bolt locating the fume pipe to the tappet cover, remove the $\frac{3}{16}$ in. bolt, nut, and spring washer from the pipe bracket on the clutch housing, and detach the pipe. Release the oil pipe from the clip on the tappet cover.

Drain and remove the sump as detailed in Sections A.1 and A.2.

Remove the cylinder head as detailed in Section A.18.

Remove the timing cover as detailed in Section A.13.

Remove the timing chain as detailed in Section A.15.

Remove the inlet and exhaust manifold as detailed in Section A.17.

Undo the two wing nuts on the tappet cover fixing studs, and withdraw the fibre washers, tappet cover, and gasket. Raise the engine valves from their seatings as far as possible, and secure them in the open position with suitable wooden wedges, as illustrated in Fig. A.28.

Extract the distributor drive bush dowel. This is equipped with a 5 mm. tapped hole, into which a 5 mm. screw may be entered to enable the dowel to be withdrawn. Alternatively a small extractor can be made, as illustrated in Fig. A.29.

The distributor drive gear assembly is now eased upwards and extracted from the top of the cylinder block.

The tappets may now be raised to their fullest extent and the camshaft withdrawn from the front of the engine, taking care not to chip the edges of the cams or tappets through contact between them.

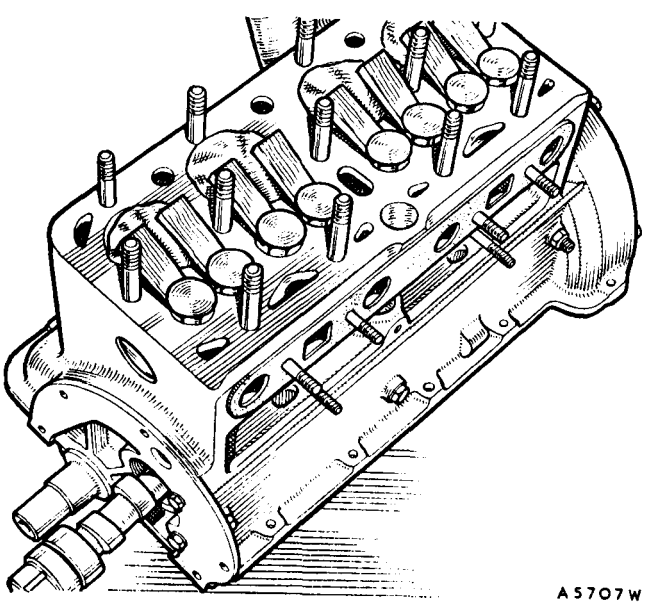

Fig. A.28

The use of wooden wedges under the valve heads to keep them clear of the tappets

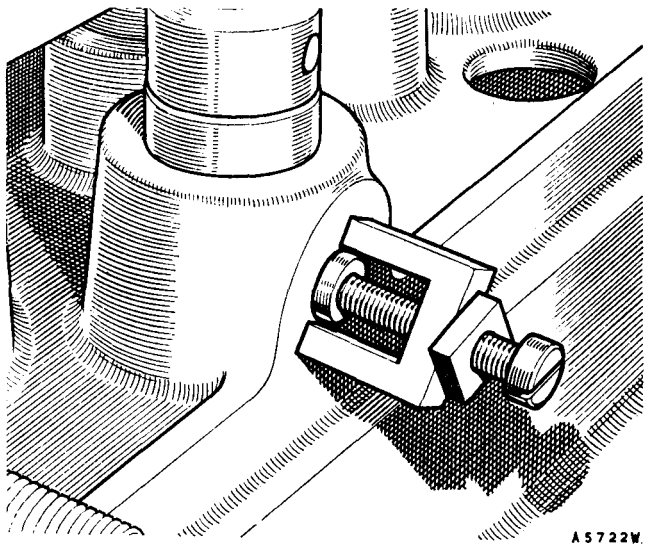

Fig. A.29

A simple extractor can be made to withdraw the dowel of the distributor drive spindle bush

Replacement is in the main a reversal of the foregoing instructions, though reference should be made to the appropriate sections when reassembling.

To refit the distributor drive gear

Turn the engine until No. 1 piston is at T.D.C. on its compression stroke. This can best be effected by turning the engine and observing the valves. When the valves are 'rocking' (i.e. exhaust just closing and inlet just opening) on No. 4 cylinder No. 1 piston is at the top of its compression stroke. If the engine is set so that the groove in the crankshaft pulley is in line with the pointer on the timing cover the piston is exactly at T.D.C.

Set the oil pump shaft so that the slot points to the 12 o'clock position, i.e. at right angles to the camshaft, insert the gear with the tongue at the tip pointing at 11 o'clock, observing that the tongue is offset and the widest portion is directed to the rear of the engine. Care must be exercised to see that the dowel hole in the distributor drive gear bush is lined up to correspond with the hole in the cylinder block.

The gear is then pushed home, when the slot at the top will take up a position at one o'clock. If the distributor drive shaft and the distributor are then offered up it will be found that the rotor points between the seven and eight o'clock positions and the engine is set for firing on No. 1 cylinder.

The distributor is set with its points just opening at T.D.C. as a preliminary setting, but final adjustment should be made on a road trial, when an appreciable advance from this setting will usually be found to give the best results.

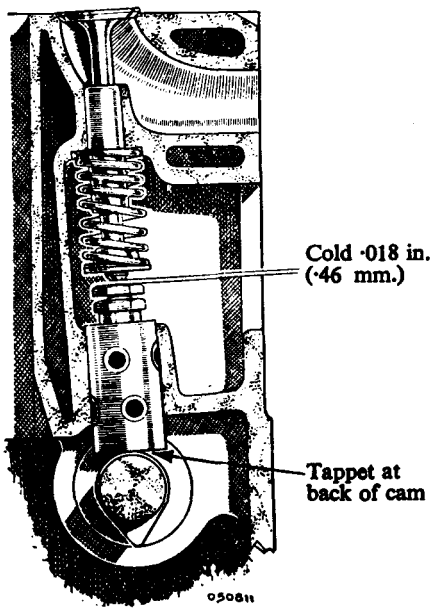

Fig. A.30

When setting the valve tappet clearance it is essential to see that the tappet being adjusted is bearing on the back of the cam exactly opposite to the peak

Section A.20

REMOVAL AND REPLACEMENT OF TAPPETS

Remove the carburetter as in Section A.16.
Remove the exhaust manifold as in Section A.17.
Remove the cylinder head as in Section A.18.
Remove the appropriate valve as in Section A.26.
Remove the valve guide as in Section A.29.
The tappet can now be lifted out of its housing.

New tappets should be fitted by selective assembly so that they just fall through their guides under their own weight when lubricated with engine oil.

Assembly is the reverse of the above operation, but care should be taken to replace the valve guide exactly in accordance with Section A.29.

In the unlikely event of it being necessary to renew all the tappets it is advisable to remove the camshaft as in Section A.19, and to remove the tappets from the bottom of their guides in order to leave the valve guides undisturbed and reduce the amount of work involved.

Section A.21

TAPPET ADJUSTMENT

If the engine is to give its best performance and the valves are to attain their maximum useful life it is essential to maintain the correct tappet clearance. The clearance for both inlet and exhaust valves is ·018 in. (·46 mm.) when cold.

IMPORTANT.—When the clearance is being set it is essential that the tappet should then be on the back of its cam, i.e. exactly opposite the peak.

As this cannot be observed easily, the adjustment is best carried out as indicated below, which also avoids turning the engine more than is necessary:

Adjust No.	1	tappet	with	No.	8	valve	fully	open
,,	,,	3	,,	,,	,,	6	,,	,,	,,
,,	,,	5	,,	,,	,,	4	,,	,,	,,
,,	,,	2	,,	,,	,,	7	,,	,,	,,
,,	,,	8	,,	,,	,,	1	,,	,,	,,
,,	,,	6	,,	,,	,,	3	,,	,,	,,
,,	,,	4	,,	,,	,,	5	,,	,,	,,
,,	,,	7	,,	,,	,,	2	,,	,,	,,

From this table it will be realized that one can ascertain that a valve is at the back of its cam by observing that the corresponding valve paired with it is in the fully open position.

Three spanners are required for the tappet adjustment operation, one to hold the tappet and the other two to deal with the adjusting screw and its locknut, as shown below.

It is essential to hold the tappet and the adjusting

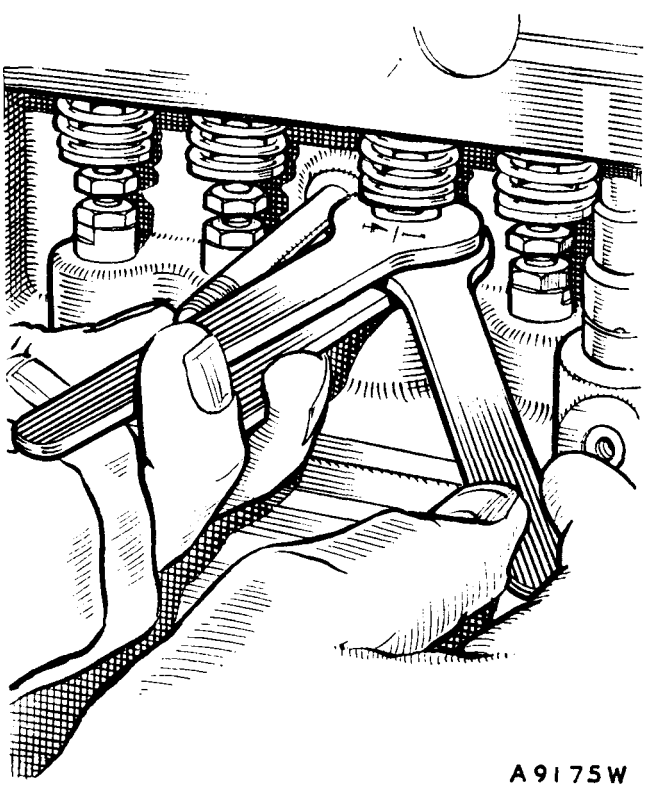

Fig. A.31

Locking the tappet screws with three spanners

screw in their correct relative positions while the locknut is tightened with the third spanner.

Tappet adjusting spanners of the correct size are available as a Service tool under Part No. 18G 334.

Section A.22

CHECKING VALVE TIMING

Set No. 1 cylinder inlet valve to ·023 in. (·58 mm.) clearance when cold, and then turn the engine until the valve is about to open.

The indicating groove in the rear flange of the crankshaft pulley should then be opposite the pointer on the timing cover, i.e. the No. 2 valve should be about to open at T.D.C. and No. 4 piston will be at T.D.C. on its compression stroke.

NOTE.—Do not omit to reset the tappet to the correct running clearance of ·018 in. (·46 mm.) (cold) when the timing check has been completed. The clearance of ·023 in. (·58 mm.) is necessary to bring the opening position of the valve to T.D.C. as the normal valve opening is 8° B.T.D.C.

Section A.23

REMOVAL AND REPLACEMENT OF FLYWHEEL

(Engine Out of Car)

Drain and remove the sump as in Sections A.1 and A.2.

Remove the clutch assembly as in Section E.2.

Remove the rear main bearing cap and bottom half bearing.

Extract the locking wire and remove the four $\frac{5}{16}$ in. flywheel attachment bolts.

Detach the flywheel from the crankshaft flange with a suitable extractor or by tapping it with a copper hammer towards the rear of the engine, slowly rotating the crankshaft so that the flywheel is driven off evenly.

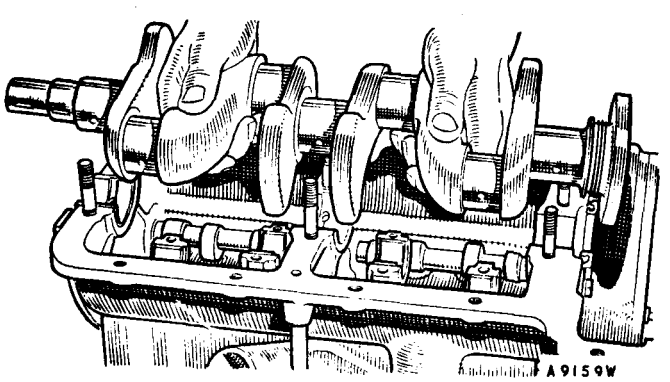

Fig. A.32

Removal of the crankshaft from the cylinder block

Reassembling is carried out in the reverse order to the above, making sure that the locating dowel is in proper register.

Section A.24

REMOVAL AND REPLACEMENT OF CRANKSHAFT

(Engine Out of Car)

Drain and remove the sump as detailed in Sections A.1 and A.2.

Remove the oil pump as detailed in Section A.3.

Remove the timing cover as detailed in Section A.13.

Remove the timing chain as detailed in Section A.15.

Remove the flywheel as detailed in Section A.23.

Remove the pistons and connecting rods as detailed in Section A.5.

Unscrew the two securing nuts from each main bearing and remove the caps.

NOTE.—Mark each bearing cap and bearing to ensure that they are reassembled to the correct journal, taking care, in the case of bearings, that they are not damaged or distorted when marking. Punches should not be used for this purpose. Electrical engraving tools are the best for this.

Lift the crankshaft out of the bearings.

Replacement of the crankshaft is the reversal of the above operations.

IMPORTANT.—Before replacing the crankshaft thoroughly clean out all the oilways.

The clearance between the oil return thread on the crankshaft and the oil thrower cover should be ·004 in. (·10 mm.). Clearances in excess of this may lead to oil leaks from the crankcase.

Normally no wear should take place at this point, as there is no contact between the surfaces, but running with excessively worn bearings can produce wear which will lead to oil leakage into the clutch.

Section A.25

REGRINDING OF CRANKSHAFT

If on examination the crankshaft is found to be worn, scored, or oval, it must be reground to one of the following undersizes.

Reground sizes

R1	..	−0·30 mm. (−·012 in.)
R2	..	−0·50 mm. (−·020 in.).
R3A	..	−0·75 mm. (−·030 in.).
R4	..	−1·00 mm. (−·040 in.).

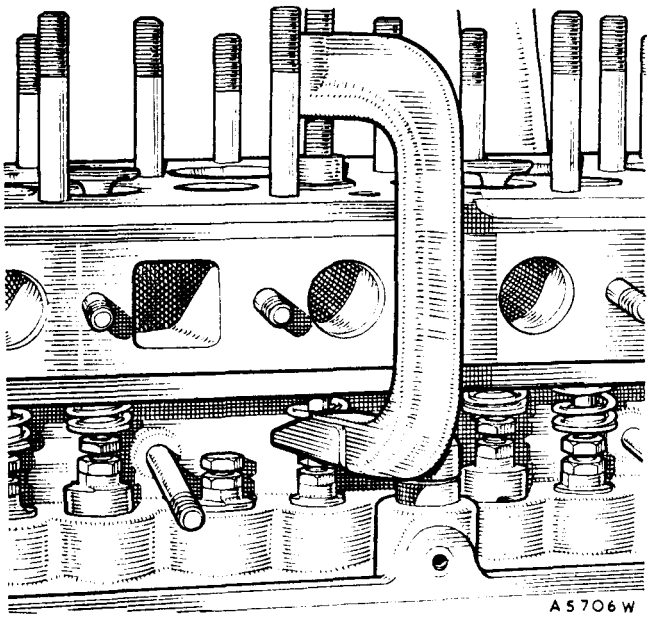

Fig. A.33

The special valve spring compressing tool in use

Standard sizes

The standard main journal diameter is 42 mm. (1·654 in.).

The standard big-end journal diameter is 40 mm. (1·575 in.).

The reground size is clearly stamped on all reground crankshafts between No. 3 and No. 4 big-end journals.

Undersize bearings are supplied to definite dimensions, with the requisite clearance of ·030 mm. (·001 to ·0015 in.) and do not require any adjustment by scraping or fitting of the caps before assembly into the engine. It is, however, essential to make sure that the correct size of bearing is being used.

Section A.26

REMOVAL AND REPLACEMENT OF VALVES

Remove the cylinder head as detailed in Section A.18.

Remove the carburetter as detailed in Section A.16.

Remove the inlet and exhaust manifold as detailed in Section A.17.

Slacken the $\frac{3}{16}$ in. pinch-bolt on the clip locating the fume pipe to the tappet cover, remove the $\frac{3}{16}$ in. bolt, nut, and spring washer from the pipe bracket on the clutch housing, and detach the pipe. Release the oil pipe from the clip on the tappet cover. Undo the two wing nuts on the tappet cover fixing studs and remove the fibre washers, cover, and gasket.

Before extracting the valves it is advisable to plug the two holes in the floor of the tappet chamber with clean rag to prevent the possibility of the cotters dropping into the engine base.

The valve cotters may now be extracted by compressing the valve spring with compressor 18G 270 (see Fig. A.33).

Remove the valves, and ease out the valve springs and caps.

Replacement is the reversal of the above operations.

NOTE.—Oil the valve stems and the guides before refitting them. Replace the valves in their original positions. They will be found to be numbered on their heads, No. 1 being at the front of the engine. Number any new valves on their heads when new ones are necessary.

The valve springs are of the progressive pitch type and should be refitted with the close coils at the top.

Make sure that the top end of the valve spring is seating properly in its recess. In order to ensure this later engines are fitted with a special spring collar at their upper end (Part No. 168339), and these should be fitted when reassembling engines not so fitted (see Section A.32).

The tappet cover gasket is fitted with the two small holes at the bottom to allow trapped oil to drain back into the crankcase and the large breather holes at the top.

Section A.27

DECARBONIZING

Remove the carburetter as detailed in Section A.16.

Remove the inlet and exhaust manifold as detailed in Section A.17.

Remove the cylinder head as detailed in Section A.18.

It is recommended that as much of the carbon deposit as possible is cleaned off the piston crown, top of the cylinder block, and exhaust ports before detaching the tappet cover and extracting the valves. This reduces the risk of foreign matter finding its way into the tappet chamber and then into the engine base. A ring of carbon should be left round the periphery of the piston crown, and the rim of carbon round the top of the cylinder bore should not be touched. To facilitate this an old piston

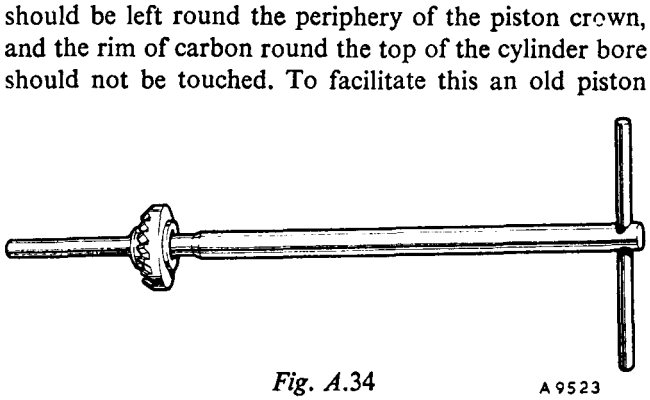

Fig. A.34

In cases of badly pitted valve seatings they should be cleaned up with a special cutter before grinding

ring can be sprung into the bore so that it rests on top of the piston.

Where special equipment is not available for the purpose of decarbonizing it will be necessary to scrape the carbon deposit from the piston crowns, cylinder block, and cylinder head, using a blunt scraper. Before commencing this operation the waterways and distributor drive housing should be plugged with clean rag.

Remove the valves as detailed in Section A.26.

When the valves and the springs are withdrawn the carbon deposit should be cleaned from the valve ports and all traces of carbon removed by compressed air or by the vigorous use of a pair of household bellows.

The cylinder head is next given attention. The sparking plugs must be removed, cleaned, and adjusted, the carbon deposit scraped from the combustion spaces, and the head thoroughly cleaned in paraffin, and, when dry, again cleaned with compressed air.

Section A.28

GRINDING AND TESTING VALVES AND SEATINGS

Each valve must be cleaned thoroughly and carefully examined for pitting. Valves in a pitted condition should be refaced or, alternatively, replaced by new valves.

Valve seats showing signs of pitting or unevenness should be trued by the use of a suitable grinder or valve seat narrowing cutter. When using this tool care should be exercised to remove the minimum amount of metal necessary to ensure a true surface.

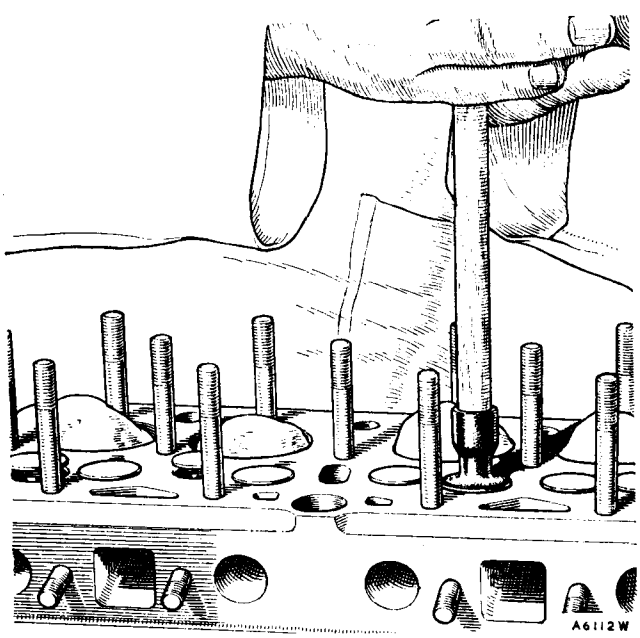

Fig. A.35

The special suction-type valve-grinding tool in use. The use of a light spring under the valve head greatly facilitates the grinding-in process

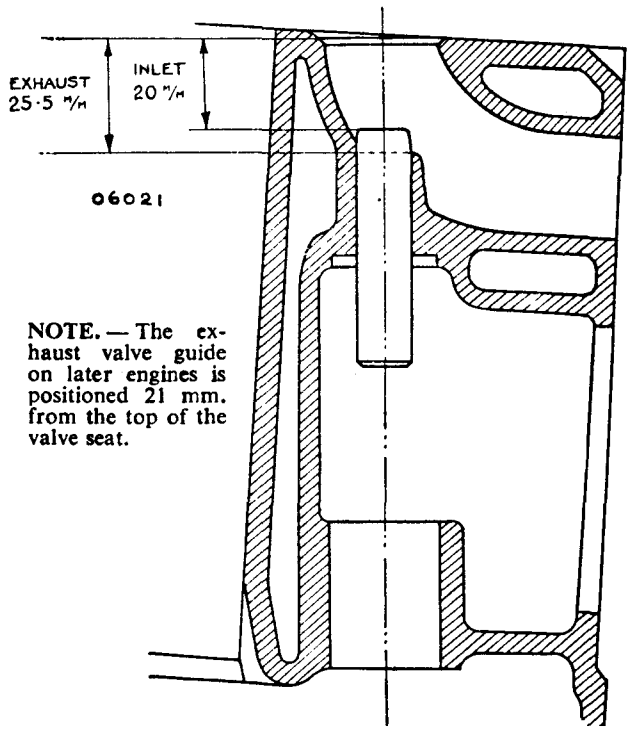

Fig. A.36

When replacing valve guides make sure that they are correctly located

All valves when fitted at the Factory are numbered on their heads from 1 to 8 and should be replaced in the corresponding valve ports, No. 1 valve being fitted to the port nearest the front of the engine. When replacement valves are fitted they should be numbered to identify the port to which they belong. The tappet head must be slackened back three or four turns before commencing to grind the valves, and care must be taken to see that the tappet for the valve being ground is on the back of its cam (see Section A.21).

The valve face should be lightly smeared with fine- or medium-grade carborundum paste, then ground to its seat, using a suction grinder. A light coil spring placed under the valve head will assist considerably in the process of grinding. The valve face should be lapped to its seat with a semi-rotary motion and occasionally allowed to rise by the pressure of the light coil spring. This assists in spreading the paste evenly over the valve face and seat. It is only necessary to carry out the grinding operation until a dull, even, mat surface is produced on the valve seat and face. If the valve seat is found to be wide it should be reduced with a 30° cutter to a width of 2 mm. (·080 in.).

THE MORRIS MINOR (Series MM) ENGINE

Home model with air intake silencer
Export models are fitted with oil bath air cleaners

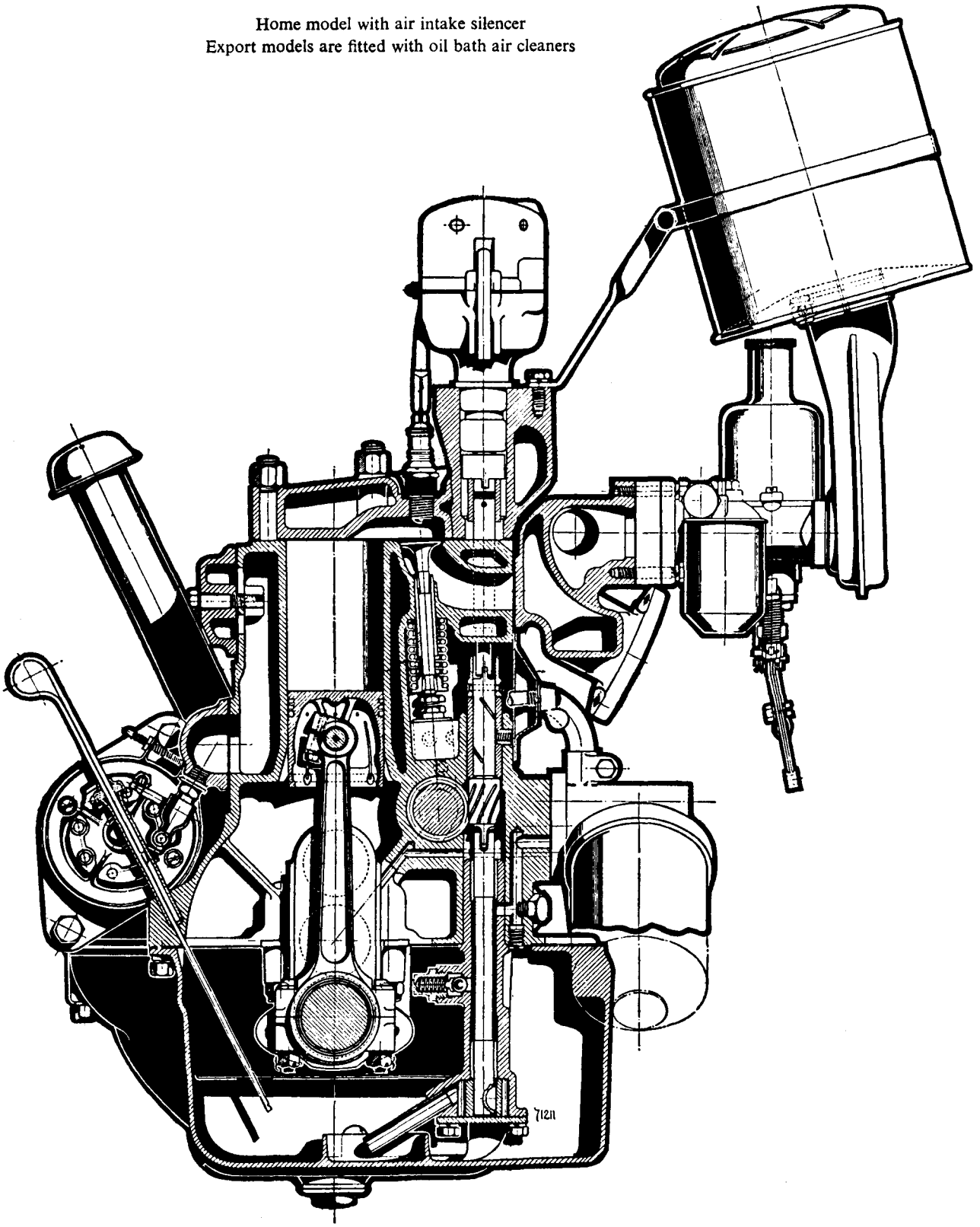

On completion the valve seats and ports should be washed with paraffin, dried, and thoroughly cleaned by compressed air. The valves should be washed in paraffin and all traces of grinding paste removed.

Section A.29

REMOVAL AND REPLACEMENT OF VALVE GUIDES

Remove the carburetter as in Section A.16.

Remove the exhaust manifold as in Section A.17.

Remove the cylinder head as in Section A.18.

Remove the appropriate valve and spring as in Section A.26.

Release the ¼ in. tappet adjustment locknut and remove the tappet screw from the tappet. (Service tool 18G 307.)

Rotate the crankshaft until the tappet is resting on the back of the cam, i.e. at its lowest position (see Section A.21).

Using a suitable drift, the valve guide may now be removed by driving it downwards until it is clear of the block. It can then be withdrawn over the tappet.

When refitting a valve guide care must be exercised to ensure that it is inserted into the top of its housing with the chamfered end downwards. The guide is then driven into position with a suitable drift, taking care to see that it is driven in to the correct distance.

The distance from the top face of the block to the valve guide should be:

Inlet 20 mm. (·79 in.). Exhaust (Part No. X 15866 up to Engine 77000) 25·5 mm. (1·0 in.). From Engine 77001, Exhaust (Part No. X 31635) 21 mm. (·83 in.).

Section A.30

OIL PRESSURE

Under normal running conditions the oil should not drop below 40 lb./sq. in. (2·8 kg./cm.^{2}) on the gauge at normal road speeds, whilst approximately 20 lb./sq. in. (1·4 kg./cm.^{2}) should be shown when the engine is ticking over.

Should there be a noticeable drop in pressure, the following points should be checked over:

(1) That there is a good supply of the correct grade of oil in the engine sump.

(2) That there is a complete absence of air leakage on the suction side of the pump and that the gears are in order with the correct gear clearances (see Section A.4).

That the gauze oil pump filter is clean and not choked with sludge.

(4) That the bearings on the delivery side to which oil is fed under pressure have the correct working clearances. Should the bearings be worn and the clearances excessive, the oil will escape more readily from the sides of the bearings, particularly when the oil warms up and becomes more fluid. This will cause a drop in pressure on the gauge as compared with that shown when the bearings are in good order.

NOTE.—The automatic release valve in the pump deals with any excessive oil pressure when starting from cold. When hot the pressure drops as the oil becomes more fluid.

Cold running and the unnecessary use of the mixture control are often the cause of serious oil dilution by petrol and a consequent drop in pressure.

New engines with new oil will give considerably higher pressure readings than those given in the first paragraph of this section.

Particular attention is called to the recommended change of oil at the specified intervals.

Section A.31

LOCATING TROUBLES

Engine will not start

A. If the starter will not turn the engine check the following:
   (1) Battery discharged and/or defective.
   (2) Disconnected or broken leads.
   (3) Faulty starter switch.
   (4) Faulty starter motor.
   (5) Starter cables shorting to earth.
   (6) Battery terminals badly corroded or battery leads loose.
   (7) Undue stiffness in engine.

B. If starter turns engine very slowly check:
   (1) Partly discharged battery.
   (2) Loose terminals or connections.
   (3) Dirty or corroded connectlons.
   (4) Faulty insulation on starter cables.
   (5) Tightness in engine.

C. If starter turns the engine smartly but it will not fire check:
   (1) Plugs not sparking.
   (2) Spark at the coil. If the coil gives good spark check:
      (*a*) Gaps in plugs too wide or too close.
      (*b*) Plugs oiled up.
      (*c*) Plug insulators damaged or excessively dirty.

(3) If poor spark at coil check:
- (*a*) Low-tension or high-tension leads from coil to distributor loose or corroded.
- (*b*) Distributor points dirty, worn, or out of adjustment.
- (*c*) Carbon brush not making contact.
- (*d*) Rotor cracked.
- (*e*) Faulty condenser (substitute a condenser known to be in order).
- (*f*) Faulty coil (substitute a coil known to be in order).

(4) Check carburetter for petrol supply. If no petrol in float-chamber check:
- (*a*) Functioning of the petrol pump.
- (*b*) Air leak in pipe line, indicated by rapid action of the pump.
- (*c*) Float-chamber needle sticking.

(5) If petrol is reaching float-chamber check:
- (*a*) Choked jet.
- (*b*) Water in the petrol.
- (*c*) Dirt in carburetter.
- (*d*) Air leak in induction system.
- (*e*) Adjustment of carburetter control.

If engine starts but runs erratically

A. Check the following ignition points:
- (1) Loose high-tension leads to sparking plugs or corroded connection.
- (2) Incorrect setting of plug points.
- (3) Damaged plug or moisture on plugs.
- (4) Loose connection on battery or in ignition circuit.
- (5) Faulty high-tension leads.
- (6) Battery charge low.
- (7) Battery connections faulty.
- (8) Defective contact breaker.
- (9) Defective distributor.
- (10) Faulty condenser.

B. Check the following carburetter points:
- (1) Water in float-chamber.
- (2) Choked filters in carburetter or petrol pump, indicated by slow pumping of petrol pump.
- (3) Action of petrol pump. Suspect if sluggish.
- (4) Jet partially choked.
- (5) Carburetter set too rich, indicated by sooty exhaust.
- (6) Petrol tank filler cap vent choked.
- (7) Obstruction in fuel feed pipe lines.
- (8) Air leak into induction system.

C. Check the following mechanical points:
- (1) Sticking valves.
- (2) Incorrect valve tappet clearance.
- (3) Burnt or broken valves.
- (4) Incorrect valve timing.
- (5) Incorrect ignition timing.
- (6) Broken or weak valve spring.
- (7) Valve guides worn, causing air leaks.
- (8) Faulty cylinder head gasket.
- (9) Back-pressure due to damaged exhaust system.

If engine starts and stops

A. Check the following ignition points:
- (1) Loose low-tension leads.
- (2) Loose distributor clamp screw.
- (3) Faulty ignition switch contact.

B. Check the following carburetter points:
- (1) Incorrect setting of carburetter controls.
- (2) Blocked petrol pipe.
- (3) Water in float-chamber.
- (4) Sticking needle valve.
- (5) Petrol pump failing to function regularly.
- (6) Air leak into petrol line.
- (7) Fuel level low in tank.

If engine will not idle or run slowly

A. Check the following carburetter points:
- (1) Throttle stop screw incorrectly set.
- (2) Throttle controls incorrectly set.
- (3) Weak mixture or over-rich mixture.
- (4) Faulty functioning of petrol pump.

B. Check the following mechanical points:
- (1) Sticking valves.
- (2) Incorrect valve tappet clearance.
- (3) Air leak in induction system.
- (4) Burnt or broken valves, indicated by loss of compression.
- (5) Broken valve spring.
- (6) Damaged cylinder head or gasket.

C. Check the following ignition points:
- (1) Loose high-tension leads.
- (2) Incorrect setting of plug points.
- (3) Damaged plugs or moisture on plugs.
- (4) Loose connections on battery or in ignition circuit.
- (5) Faulty high-tension leads.
- (6) Battery charge low.
- (7) Battery connections faulty.
- (8) Defective contact breaker or burnt points.
- (9) Defective distributor.
- (10) Defective condenser.

Engine fails to give full power

A. Check the following carburetter points:
(1) Faulty or insufficient petrol supply.
(2) Air leaks in induction pipe or petrol pipe.
(3) Partly choked jet.

B. Check the following mechanical points:
(1) Incorrect valve tappet clearance.
(2) Burnt valves or badly seating valves.
(3) Cylinder head stud nuts not tight.
(4) Damaged cylinder head gasket.
(5) Valve timing incorrect.
(6) Broken or weak valve spring.
(7) Excessive carbon deposit.
(8) Excessively worn pistons and cylinders.

C. Check the following ignition points:
(1) Ignition retarded too far.
(2) High-tension leads shorting or loose.
(3) Dirty sparking plugs.
(4) Sparking plug points incorrectly set.
(5) Contact breaker points incorrectly set.
(6) Contact breaker points pitted.
(7) Faulty coil.
(8) Faulty condenser.
(9) Low-tension connection or leads faulty.
(10) Battery run down or faulty.

Engine knocks

A. Check the following:
(1) Ignition timing too far advanced.
(2) Excessive carbon deposit.
(3) Fuel unsuitable or weak mixture.
(4) Loose or worn bearings or pistons.
(5) Defective or unsuitable plugs.
(6) Valve timing incorrect or tappet clearance incorrect.

Engine backfires

A. Check the following ignition points:
(1) High-tension cables defective or connections loose.
(2) High-tension leads incorrectly fitted.
(3) Low-tension wiring defective or connections loose.
(4) Switch contact faulty.
(5) Distributor gap incorrect or points pitted or dirty.
(6) Contact breaker arm sticking or defective.
(7) Distributor cover cracked or loose.
(8) Distributor not correctly timed.
(9) Rotor carbon brush pick-up defective or worn.
(10) Clearance between rotor arm and distributor studs excessive.
(11) Coil defective or wet.
(12) Defective condenser.
(13) Plugs overheated, unsuitable, or points incorrectly set.

B. Check the following carburation points:
(1) Jet choked or restricted.
(2) Jet incorrectly set, causing weak mixture.
(3) Water in petrol.
(4) Choked petrol filters.
(5) Inlet manifold joint leaking or manifold cracked.
(6) Air cleaner passages blocked.
(7) Engine running temperature too cold.
(8) Throttle not closing completely (indicated by engine backfiring when proceeding downhill with throttle shut).

C. Check the following mechanical points:
(1) Valve timing incorrect.
(2) Valve tappet clearance incorrectly set.
(3) Valves sticking.
(4) Valve seats pitted or faulty.
(5) Valve spring weak or broken.
(6) Valve guides excessively worn, causing air leaks.
(7) Timing chain excessively loose.
(8) Excessive carbon deposit.

Section A.32

FITTING VALVE SPRINGS

The deep water jacketing round the valve ports of the Morris Minor engine masks the upper seating for the valve spring and it is most important to take special care to ensure that the valve spring enters the recessed seating machined in the upper face of the valve chamber properly and that it seats squarely.

If the spring is assembled carelessly it is possible for it to ride on the edge of the machined recess, with consequent distortion, producing a side-thrust on the valve leading to rapid wear of the stem and speedy deterioration of the valve guide and valve seating. This is clearly shown in Fig. A.37.

In view of the difficulty of observing the upper seating for the valve spring when the engine is in position in the car a special valve spring collar (Part No. 168339) has been designed, the use of which will ensure that the spring will be guided onto its seating properly and without difficulty. This is shown in position in Fig. A.38.

The introduction of these special valve spring collars is strongly advised whenever the springs are replaced after valve grinding, or any other operation, as a safeguard and in order to avoid the possibility of excessive wear of the valve and guide.

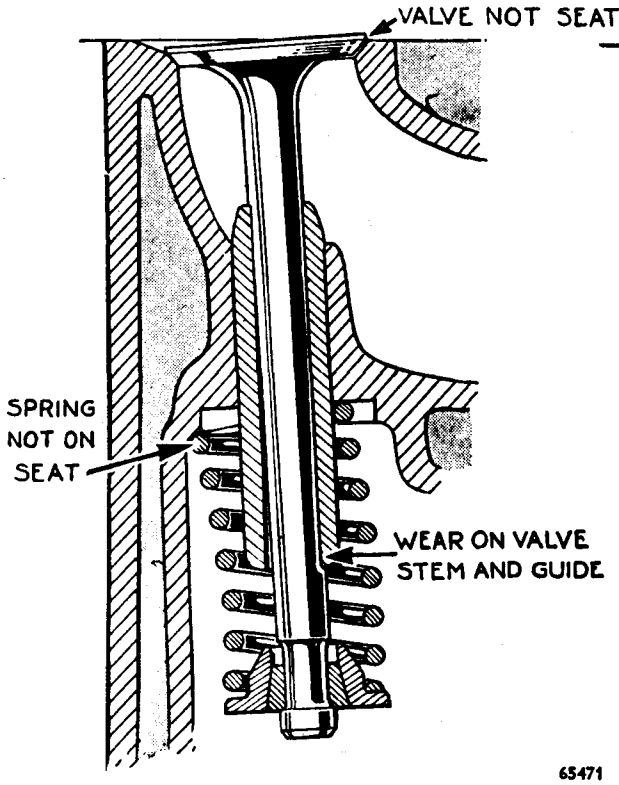

Fig. A.37

A badly fitted valve spring seating on the edge of the seating counterbore. This produces a side-thrust which causes rapid valve wear

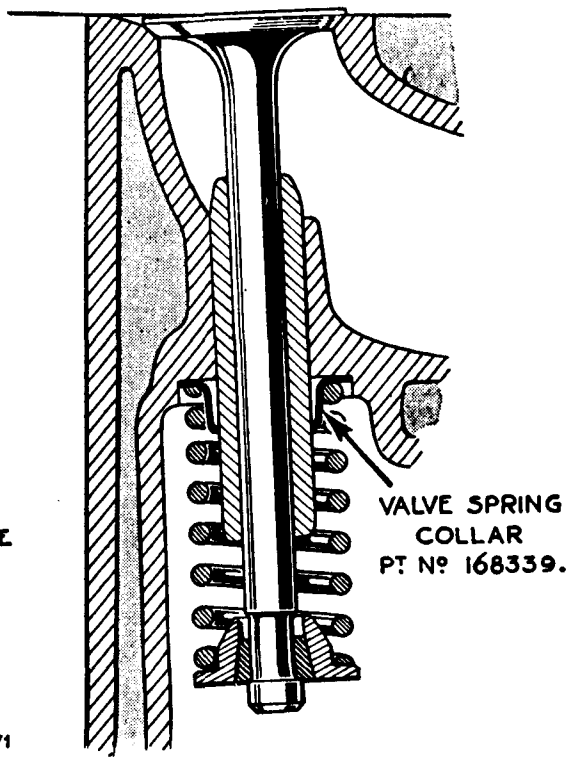

Fig. A.38

In order to ensure that the valve spring is seating properly the special valve spring collar shown in this illustration should be used when refitting the valve

THE MORRIS MINOR (Series MM)
SIDE-VALVE ENGINE (Type USHM2)
Water Pump and Thermostat Model

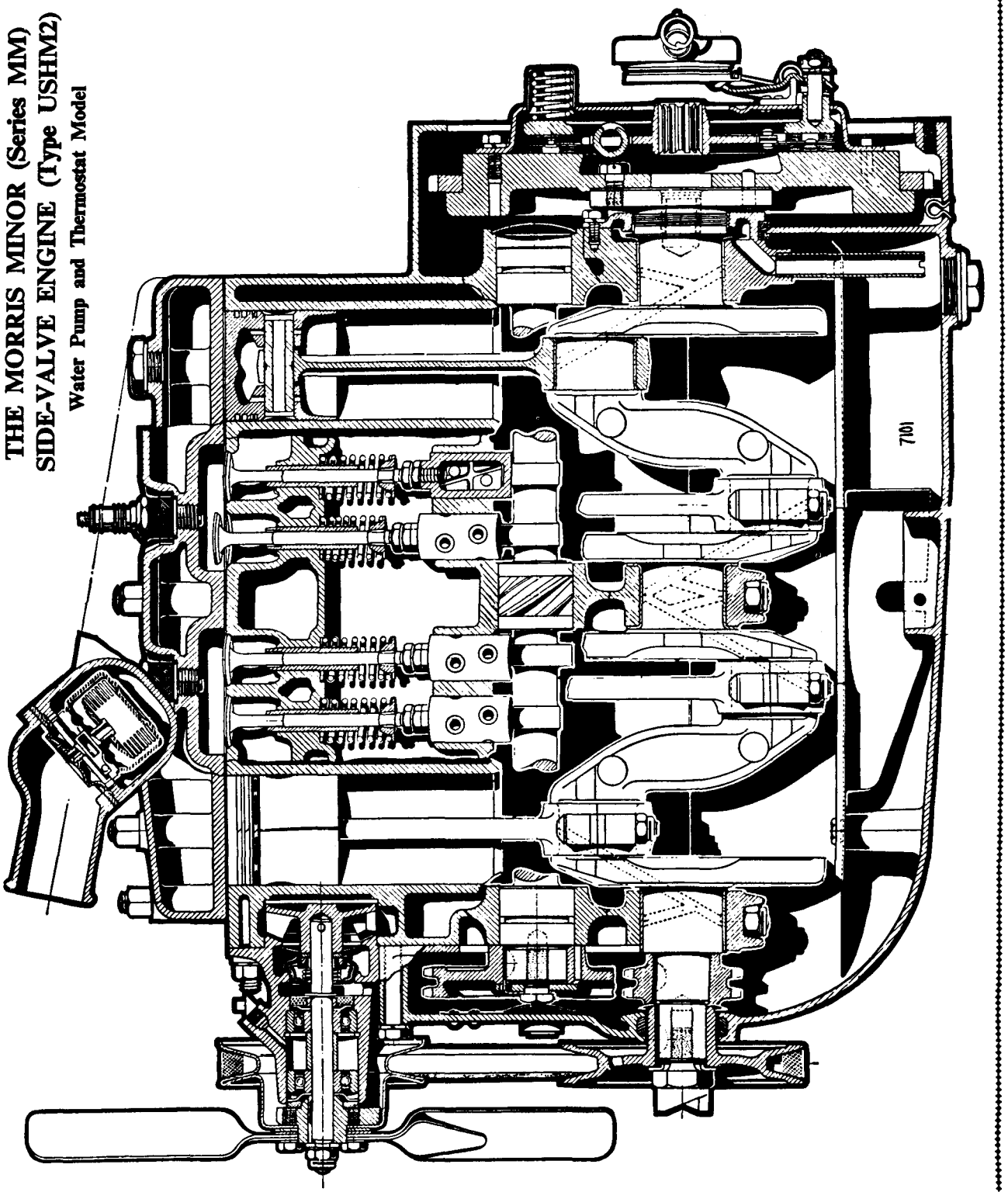

SECTION AA

ENGINE (APHM)

OF THE MORRIS MINOR (Series II)

THE MORRIS MINOR (Series II) ENGINE LUBRICATION

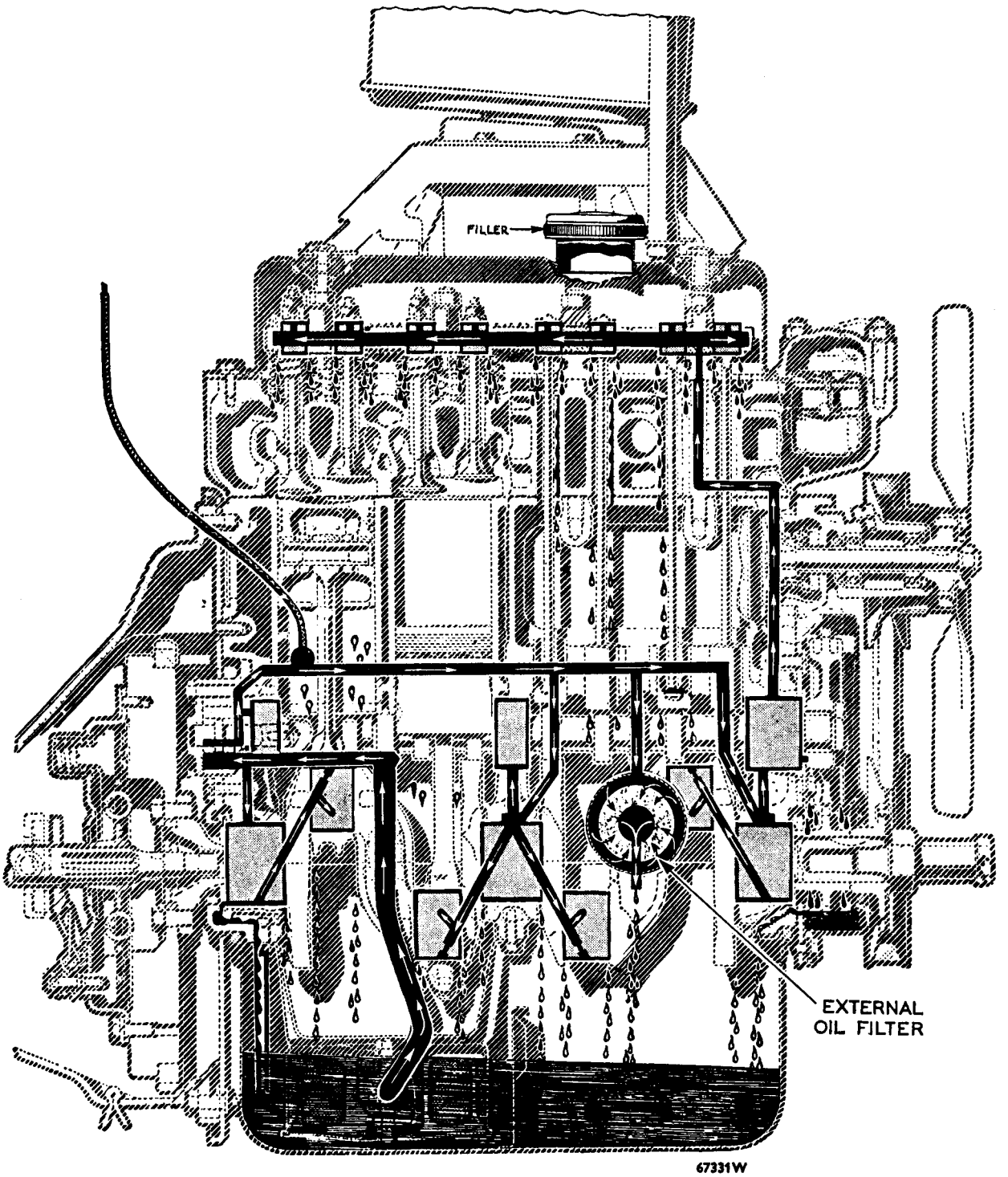

GENERAL DESCRIPTION

The Morris Minor (Series II) overhead-valve engine is built in unit construction with a 6¼ in. single-plate dry clutch.

The valves are set in line in the detachable cylinder head, and are operated by rockers and push-rods from the camshaft in the left-hand side of the crankcase. Oil seals are fitted to the valves and there is the normal provision on the rockers for clearance adjustment. The camshaft is roller-chain-driven from the crankshaft, with twin synthetic rubber chain silencers. At the timing gear end it has a steel-backed white-metal bearing, and the two other bearings are direct in the crankcase. The oil pump and distributor are driven from the camshaft, the latter by a transverse shaft with helical gear drive from the camshaft.

The split-skirt pistons are of aluminium alloy with anodized finish, and carry three compression rings and a slotted oil control ring. The gudgeon pins are clamped in the connecting rods, which have steel-backed white-metal renewable big-end bearings. Three steel-backed white-metal renewable bearings support the forged-steel counterbalanced crankshaft. The thrust is taken by the centre main bearing.

A centrifugal water pump and fan is driven from the crankshaft by the dynamo belt.

A hot-spot is provided between the aluminium induction pipe and the cast-iron exhaust manifold on the left-hand side of the engine. The semi-downdraught carburetter is supplied with fuel from an S.U. electric pump and carries an air silencer on Home models. An oil bath air cleaner is fitted to Export models.

The power unit has a flexible rubber mounting.

LUBRICATION SYSTEM

The oil supply is carried in the sump below the cylinder block, and the filler cap is fitted to the valve rocker cover. The oil indicator rod is on the right-hand side of the engine and is marked to indicate the maximum level.

The eccentric-vane non-draining-type oil pump is mounted on the rear end of the crankcase and is driven by the camshaft. Oil drawn through a gauze strainer in the sump is delivered to a gallery on the right-hand side of the crankcase. The oil then passes by way of drilled passages to the main, big-end, and camshaft bearings. The connecting rods have jet holes to deliver oil quickly to the cylinder walls when starting up. The camshaft front bearing feeds oil at a reduced pressure to the overhead-valve rocker gear and also to the timing chain. The tappets are lubricated by oil returning from the rocker gear by way of the push-rod apertures and by splash.

A throw-away-type by-pass filter carried on the right-hand side of the crankcase is connected to the main oil gallery by a drilled passage.

There is a vent pipe in the tappet cover, and a breather in the valve rocker cover which is connected to the air silencer.

An oil pipe connects the rear end of the main oil gallery with the oil gauge on the instrument panel and below the oil pipe union is a non-adjustable pressure relief valve.

Section AA.1

DRAINING THE ENGINE SUMP

The sump must be drained and filled with new oil at the specified intervals. The hexagon-headed drain plug is at the rear end of the sump on the right-hand side. The oil should preferably be drained when the engine is hot, in which condition it will flow more readily.

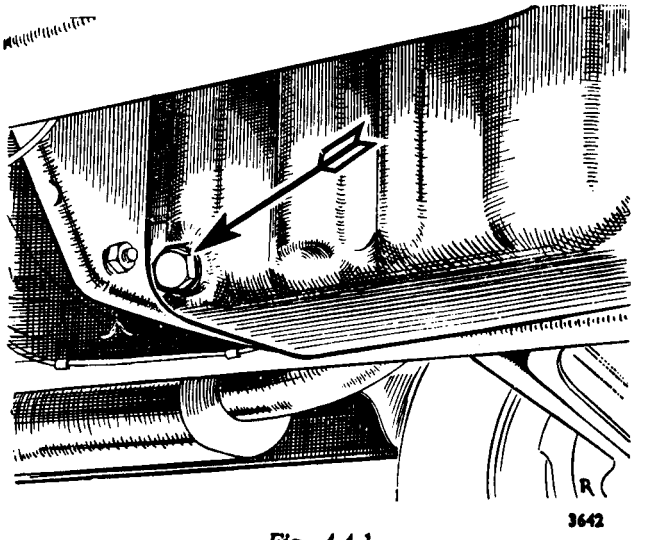

Fig. AA.1

The engine sump drain plug is located at the rear end of the sump on the right-hand side of the engine

Unless the sump is to be removed and cleaned, it should be allowed to drain for at least 10 minutes before the drain plug is replaced. The capacity of the sump is given in **'GENERAL DATA'**.

At the specified intervals, a new external oil filter should be fitted. For details of removal see Section PP.1.

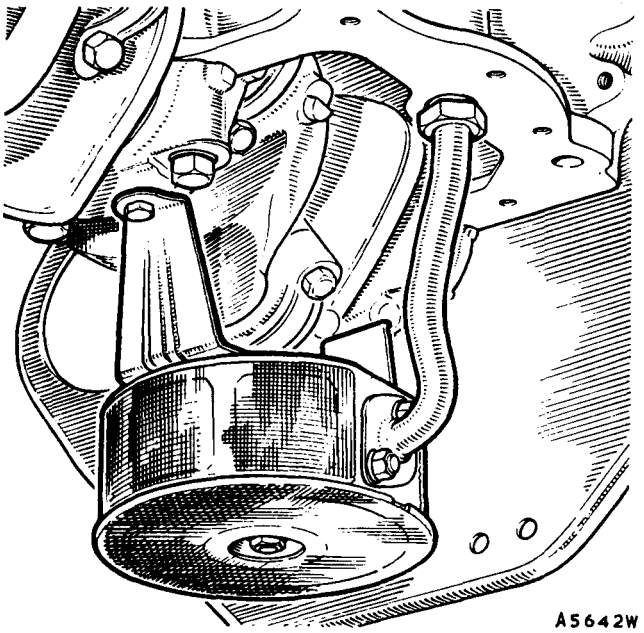

Fig. AA.2

The attachment for the oil pump pick-up to the main bearing caps and the union attaching the oil suction pipe to the cylinder block casting are clearly shown in this illustration

Section AA.2

REMOVAL AND REPLACEMENT OF SUMP AND OIL PUMP PICK-UP

The sump is located by 14 $\frac{3}{16}$ in. hexagon-headed bolts, shakeproof washers, and lock plates inserted from the under side of the sump flange. To remove the sump withdraw the 14 bolts and the sump can then be lowered from the engine.

To clean the sump wash out all oil with paraffin and clean all deposit from the drain plug. Thoroughly dry the sump.

With the sump removed it is possible to remove the gauze oil strainer which is suspended in the sump and from which oil is taken to the oil pump. To remove the strainer extract the two bolts which secure it to the main bearing caps and undo the union which connects the oil delivery pipe to the cylinder block.

The strainer may be dismantled for cleaning by removing the centre nut and bolt and the two delivery pipe flange bolts. Note that there is a locating tongue on the side of the cover which must be positioned correctly when reassembling. Remember also to replace the distance tube.

Clean the strainer with petrol and a stiff brush. Never use rag to clean it.

When refitting the sump to the engine particular attention should be given to the sealing gaskets for the crankcase face and the two oil seal packings for the crankshaft which fit into recesses in the sump.

If the gaskets are in good condition and have not been damaged during the removal of the sump they may be used again, but it is advisable to fit new ones.

Before fitting new gaskets remove all traces of the old ones from the crankcase face, the sump face, and the recesses in the sump.

Fit the two oil seal packings into their recesses, ensuring that they are correctly bedded down. The ends should be about $\frac{3}{32}$ in. (2·4 mm.) proud of the sump face. Next smear the faces of the crankcase joint with grease and fit the two halves of the large gasket. Ensure that the holes in the gasket register with those in the crankcase.

Lift the sump into position on the crankcase and insert and tighten evenly the 14 bolts.

Section AA.3

OIL PRESSURE RELIEF VALVE

The non-adjustable oil pressure relief valve is situated at the rear of the right-hand side of the cylinder block and is held in position by a $\frac{9}{16}$ in. domed hexagon nut sealed by two fibre washers. The relief valve spring maintains a valve cup against a seating machined in the block.

The valves should be examined to ensure that the cup is seating correctly and that the relief spring has

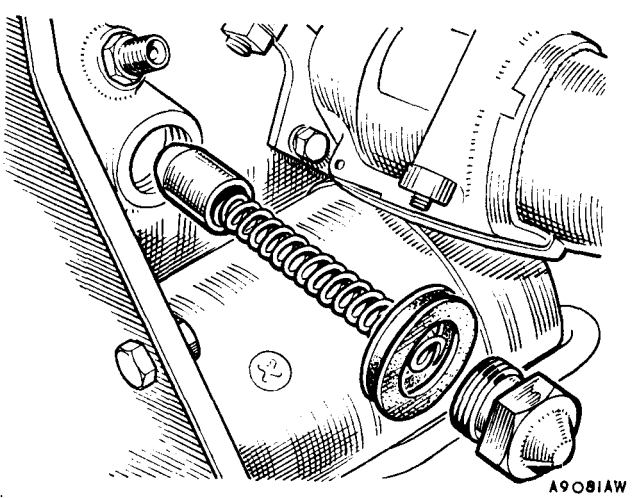

Fig. AA.3

The component parts of the oil relief valve withdrawn from their housing at the rear end of the cylinder block

not lost its tension. The latter can be checked by measuring the length of the spring. To give the correct relief pressure of 60 lb./sq. in. (4·2 kg./cm.²) this should be not less than 2⅞ in. (7·3 cm.). Fit a new cup and spring if necessary.

Section AA.4

OIL PRESSURE

Under normal running conditions the oil pressure should not drop below 40 lb./sq. in. (2·8 kg./cm.²) on the gauge at normal road speeds, whilst approximately 20 lb./sq. in. (1·4 kg./cm.²) should be shown when the engine is idling.

On engines fitted to later models with a central instrument dial the functioning of the oil pump is indicated by a warning light on the dial which glows when the oil pressure falls below 8 lb./sq. in. (·56 kg./cm.²). The oil gauge pipe is replaced by an electrical pressure head with additional leads in the harness to connect it to the warning light.

Should there be a noticeable drop in pressure, the following points should be checked over:

(1) That there is a good supply of the correct grade of oil in the engine sump.

(2) That there is no air leakage at the oil pump pick-up union on the suction side of the pump and that the oil pump is not worn and is functioning correctly (see Section AA.30).

(3) That the strainer in the sump is clean and not choked with sludge.

(4) That the bearings, to which oil is fed under pressure, have the correct working clearances. Should the bearings be worn and the clearances excessive, the oil will escape more readily from the sides of the bearings, particularly when the oil is warm and becomes more fluid. This will cause a drop in pressure on the gauge as compared with that shown when the bearings are in good order.

NOTE.—**The automatic relief valve in the lubrication system deals with any excessive oil pressure when starting from cold. When hot the pressure drops as the oil becomes more fluid.**

Continuous cold-running and the unnecessary use of the mixture control are often the cause of serious oil dilution by petrol and a consequent drop in pressure.

New engines with new oil will give considerably higher pressure readings than those given in the first paragraph of this section.

Particular attention is called to the recommended change of oil at the specified intervals.

Section AA.5

REMOVAL AND REPLACEMENT OF MAIN AND BIG-END BEARINGS

Unless the bearing journals are badly worn the big-end bearings may be renewed without removing the crankshaft. To renew the main bearings it is necessary to withdraw the crankshaft as detailed in Section AA.32. Liners are used both for the main and the big-end bearings, which are of the shimless type and are therefore non-adjustable.

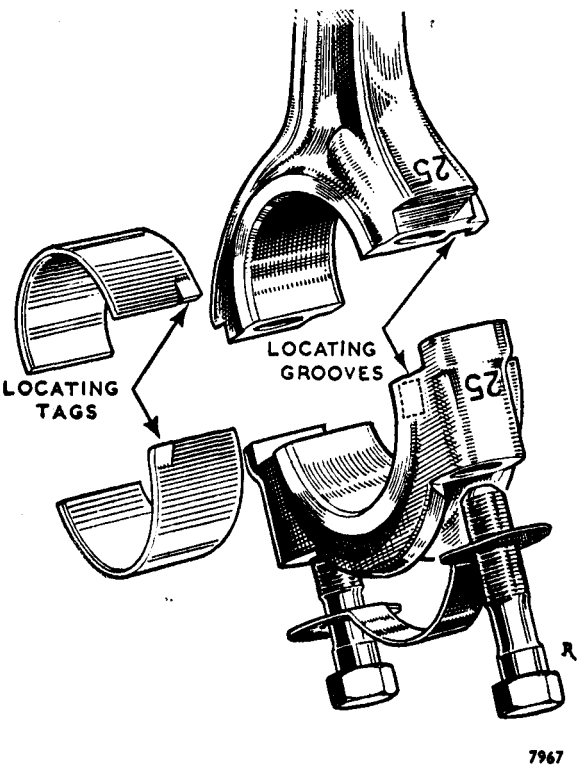

Fig. AA.4

The big-end components partly separated, showing the tags and recesses which locate the liners in the bearing

Big-end bearings

Drain the engine oil and remove the sump and oil pump pick-up as in Sections AA.1 and AA.2.

As the bearings are of the shimless type it is essential that no attempt should be made to adjust bearings which are worn. Always fit new bearings in place of worn parts. If the crankshaft journals are found to be in a worn condition it is advisable to fit a service reground crankshaft, complete with main and big-end bearings.

Both the big-end and main bearing liners are located in position in the bearing housings by a small tag on one side of each half-bearing, and it should be noted

THE COMPONENT PARTS OF THE MORRIS MINOR (Series II) CYLINDER BLOCK, CYLINDER HEAD, ETC.

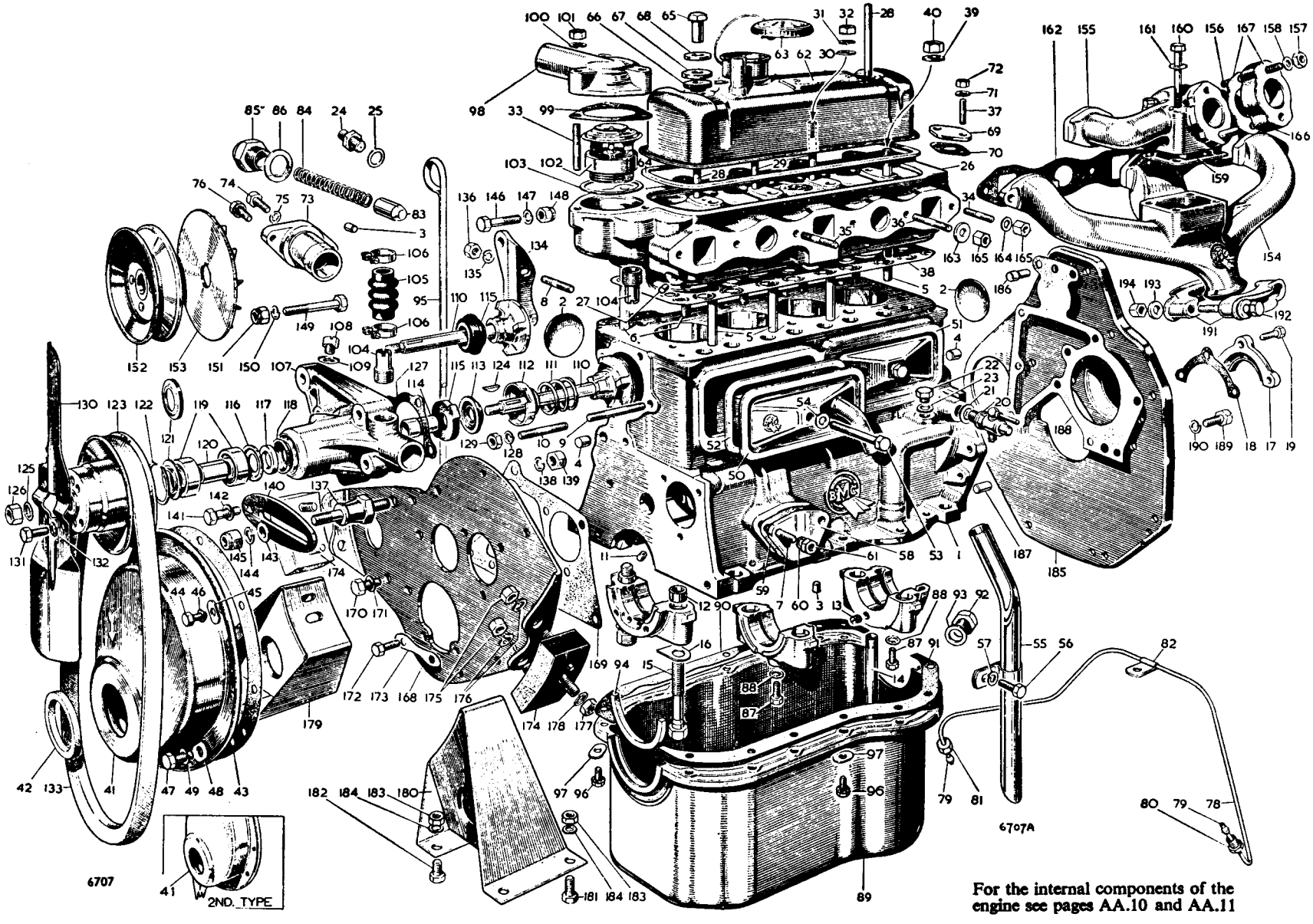

For the internal components of the engine see pages AA.10 and AA.11

KEY TO THE COMPONENT PARTS OF THE MORRIS MINOR (Series II) CYLINDER BLOCK, CYLINDER HEAD, ETC.

No.	Description
1.	Block—cylinder.
2.	Plug—core hole.
3.	Plug—oil relief valve passage.
4.	Plug—oil gallery.
5.	Stud—long—cylinder head.
6.	Stud—short—cylinder head.
7.	Stud—blanking plate.
8.	Stud—rear dynamo bracket.
9.	Stud—long—water pump body.
10.	Stud—short—water pump body.
11.	Restrictor—camshaft oil feed.
12.	Dowel—main bearing cap.
13.	Plug—rear main bearing cap.
14.	Pipe—rear main bearing cap drain.
15.	Bolt—main bearing cap.
16.	Lock washer—bolt.
17.	Cover—rear.
18.	Joint—cover.
19.	Screw—cover.
20.	Tap—water drain.
21.	Washer—tap.
22.	Plug—oil priming.
23.	Washer—copper—plug.
24.	Union—oil gauge pipe.
25.	Washer—copper—union.
26.	Cylinder head.
27.	Plug—oil hole.
28.	Stud—long—rocker bracket.
29.	Stud—short—rocker bracket.
30.	Washer—rocker bracket stud.
31.	Spring washer—rocker bracket stud.
32.	Nut—rocker bracket stud.
33.	Stud—water outlet elbow.
34.	Stud—short—exhaust manifold.
35.	Stud—medium—exhaust manifold.
36.	Stud—long—exhaust manifold.
37.	Stud—heater tap hole plate.
38.	Joint—cylinder head.
39.	Washer—cylinder head stud.
40.	Nut—cylinder head stud.
41.	Cover—cylinder block front.
42.	Felt—cover.
43.	Joint—cover.
44.	Screw—to front bearer plate.
45.	Washer—plain—screw.
46.	Spring washer—screw.
47.	Screw—to bearer plate and block.
48.	Washer—plain—screw.
49.	Spring washer—screw.
50.	Cover with elbow—front—block side.
51.	Cover—rear—block side.
52.	Joint—covers.
53.	Screw—to block.
54.	Washer—fibre—screw.
55.	Pipe—with clip—fume vent.
56.	Screw—clip.
57.	Spring washer—screw.
58.	Plate—blanking.
59.	Joint—to block.
60.	Spring washer—stud.
61.	Nut—stud.
62.	Cover—rocker gear.
63.	Cap with cable.
64.	Joint—cover.
65.	Cap nut.
66.	Bush—rubber—cap nut.
67.	Cup washer—nut.
68.	Washer—bracket—height adjusting.
69.	Cover-plate—heater control tap.
70.	Joint—cover-plate.
71.	Spring washer—cover-plate stud.
72.	Nut—stud.
73.	Housing—distributor.
74.	Screw—to block.
75.	Washer—shakeproof—screw.
76.	Screw—distributor to housing.
78.	Pipe—ignition control.
79.	Olive—pipe.
80.	Nut—pipe—carburetter end.
81.	Nut—pipe—distributor end.
82.	Clip—pipe.
83.	Valve—oil relief.
84.	Spring—valve.
85.	Cap—valve.
86.	Washer—fibre—cap.
87.	Screw—to bearing cap.
88.	Washer—shakeproof—screw.
89.	Sump.
90.	Joint—R.H.—sump.
91.	Joint—L.H.—sump.
92.	Plug—drain.
93.	Washer—plug.
94.	Seal—main bearing cap.
95.	Indicator—oil level.
96.	Screw—to block.
97.	Washer—screw.
98.	Elbow—water outlet.
99.	Joint—elbow.
100.	Spring washer—stud.
101.	Nut—stud.
102.	Thermostat.
103.	Joint—thermostat.
104.	Adaptor—by-pass.
105.	Connection—adaptor.
106.	Clip—connection.
107.	Body—water pump.
108.	Plug—body.
109.	Washer—fibre—plug.
110.	Spindle with vane.
111.	Spring.
112.	Cup—spring locating.
113.	Seal—rubber.
114.	Distance piece.
115.	Seal.
116.	Retainer—outer—for felt.
117.	Felt.
118.	Retainer—inner—for felt.
119.	Bearing.
120.	Distance piece—bearing.
121.	Retainer—bearing grease.
122.	Circlip—retainer.
123.	Pulley.
124.	Key—pulley.
125.	Washer—spindle.
126.	Nut—spindle.
127.	Joint—to block.
128.	Spring washer—pump stud.
129.	Nut—pump stud.
130.	Blade—fan.
131.	Screw—to pulley.
132.	Spring washer—screw.
133.	Belt—fan.
134.	Bracket—dynamo—rear.
135.	Spring washer—bracket stud.
136.	Nut—bracket stud.
137.	Pillar—adjusting link.
138.	Spring washer—pillar.
139.	Nut—pillar.
140.	Link—dynamo adjusting.
141.	Screw—link to dynamo.
142.	Spring washer—screw.
143.	Washer—link to pillar.
144.	Spring washer—link to pillar.
145.	Nut—link to pillar.
146.	Bolt—dynamo to bracket.
147.	Spring washer—bolt.
148.	Nut—bolt.
149.	Bolt—dynamo to water pump body.
150.	Spring washer—bolt.
151.	Nut—bolt.
152.	Pulley—dynamo.
153.	Fan—dynamo.
154.	Manifold—exhaust.
155.	Manifold—inlet.
156.	Stud—carburetter.
157.	Nut—stud.
158.	Washer—stud.
159.	Joint—manifolds.
160.	Bolt—inlet to exhaust.
161.	Washer—bolt.
162.	Joint—to block.
163.	Washer—large—clamping.
164.	Washer—small.
165.	Nut—stud.
166.	Distance piece—to manifold.
167.	Joint—carburetter.
168.	Plate—front bearer.
169.	Joint—to block.
170.	Screw—to block.
171.	Spring washer—screw.
172.	Screw—to main bearing cap.
173.	Plate—locking—cap screw.
174.	Block—rubber—front mounting.
175.	Nut—to plate.
176.	Spring washer—nut.
177.	Nut—to front mounting bracket.
178.	Spring washer—nut.
179.	Bracket—front mounting—R.H.
180.	Bracket—front mounting—L.H.
181.	Bolt—to frame.
182.	Screw—to frame.
183.	Nut—for bolt or screw.
184.	Spring washer—nut.
185.	Plate—rear bearer—gearbox.
186.	Dowel—top—to block.
187.	Dowel—bottom—to block.
188.	Joint—to block.
189.	Screw—to block.
190.	Spring washer—screw.
191.	Clamp—exhaust to manifold.
192.	Bolt—clamp.
193.	Washer—bolt.
194.	Nut—bolt.

that the bearings are fitted so that the tags come on the same joint edge of the bearing housing as shown in Fig. AA.4, although on opposite corners.

To detach the big-end bearings bend down the locking strips so that the bolts may be removed. Remove the connecting rod caps and extract the bearings. Care should be exercised to see that the bearing journals, etc., are thoroughly cleaned before installing new bearings. No scraping is required as the bearings are machined to give the correct diametral clearance.

Main bearings

Remove the engine from the car and remove the flywheel and clutch (Section AA.29), the timing chain (Section AA.24), the sump and strainer (Section AA.2), and the rear engine mounting plate (Section AA.30).

Unlock and remove the bolts securing the main bearing caps to the cylinder block and the two bolts securing the front cap to the front engine bearer plate.

Note that a thrust washer is fitted on each side of the centre main bearing to take the crankshaft end-thrust. These thrust washers each consist of two semicircular halves, one half having a lug which is located in a recess in the detachable half of the bearing and the other being plain.

When fitting new bearings no scraping is required as the bearings are machined to give the correct diametral clearance

In the case of a 'run' bearing it is always essential thoroughly to clean out all the oilways in the crankshaft and blocks, wash out the engine base with paraffin (kerosene), and clean the oil pump and sump strainer to ensure that no particles of white metal are left anywhere in the lubricating system. The rear main bearing cap horizontal joint surfaces should be thoroughly cleaned and lightly covered with Hylomar jointing compound before the cap is fitted to the cylinder block. This will ensure a perfect oil seal when the cap is bolted down to the block. Replace each main bearing and cap, replacing the centre main bearing thrust washers in their correct positions with the oil grooves away from the bearing. Refit the locking strip or locking plates to each bearing cap and bend them to lock the bolts after tightening. Note the two bolts securing the front main bearing cap to the front bearer plate locked by a common plate.

Section AA.6

REMOVAL AND REPLACEMENT OF WATER PUMP

The water pump is of the impeller type and it is mounted on a common spindle with the fan in a casting fastened to the front face of the cylinder block.

The water seal is effected by a spring-loaded carbon gland washer bearing on a seating in the impeller housing. It is necessary to remove the pump and fan assembly and dismantle it to obtain access to the sealing gland.

The water pump and fan assembly is attached to the front of the cylinder block by four studs and nuts and is withdrawn and serviced as detailed in Section DD.6.

If the gasket is damaged as the pump body is withdrawn from the cylinder block ensure that all traces of it are removed before a new gasket is fitted and the pump replaced.

Section AA.7

REMOVAL AND REPLACEMENT OF CARBURETTER

Before removing the carburetter it is necessary to remove the air cleaner.

Remove the two nuts and washer from the studs which secure both the manifold and the air cleaner bracket. Remove the two cap nuts which secure the bracket to the top of the rocker cover. Disconnect the breather hose by removing the clip which attaches it to the breather pipe on the rocker cover. Disconnect the throttle return spring. Take out the two bolts securing the air cleaner pipe to the carburetter flange and lift off the air cleaner and bracket as an assembly.

To remove the carburetter disconnect the suction advance pipe union from the carburetter. Disconnect the petrol flexible hose at the pump end. Slacken the

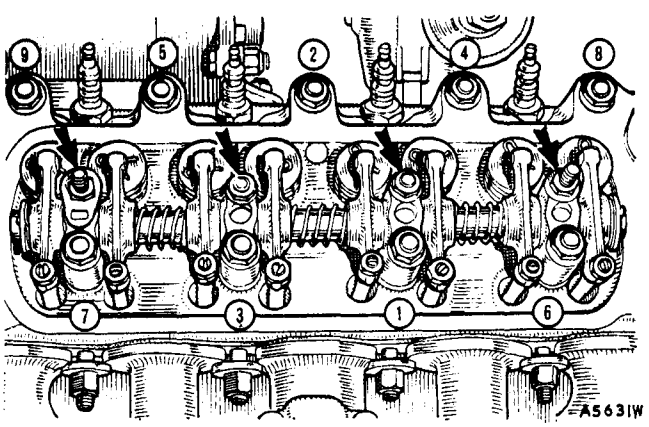

Fig. AA.5

A view of the top of the engine with the cover removed showing the nine cylinder head retaining nuts and their correct order of slackening and tightening. The four stud nuts indicated by arrows also serve to retain the rockers in position but are screwed onto studs which are located in the cylinder head only and not in the cylinder block

choke cable attachment nut on the jet lever and loosen the outer casing attachment screw on the set link. Remove the choke cable. Take out the nuts and washers securing the carburetter and distance piece to the inlet manifold and lift off the carburetter.

Replacement of the carburetter, followed by replacement of the air cleaner, is a reversal of the above procedure. It should be noted that the distance piece which fits between the carburetter flange and the flange on the induction manifold has a gasket fitted on either side of it. If either of these gaskets is damaged the faces of the distance piece and the carburetter flange must be cleaned so that no trace of the old gasket remains, and a new gasket must be fitted.

Section AA.8

REMOVAL AND REPLACEMENT OF INLET AND EXHAUST MANIFOLDS

Before removing the manifolds it is necessary to remove the air cleaner and carburetter as in Section AA.7.

Having done this, remove the exhaust pipe clamp, which is secured by two nuts, bolts, and washers.

Six studs and nuts secure the manifolds to the cylinder head. The four centre nuts, two of which have to be removed to enable the air cleaner to be taken off, have large washers which enable them to secure both the inlet and exhaust manifolds. The two remaining nuts, one at each end of the cylinder head, have small washers and secure the exhaust manifold only.

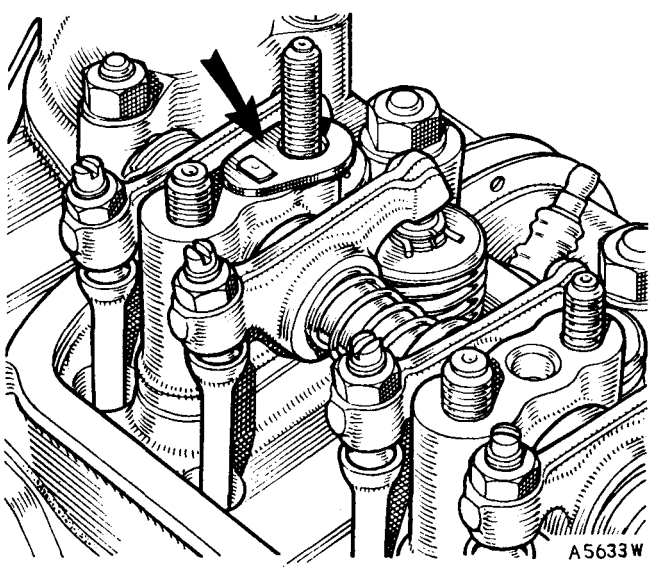

Fig. AA.6

The special locking plate under the stud nut for the front rocker shaft bracket is clearly indicated by the arrow. On later models this is replaced by four locking plates, one on each rocker shaft bracket

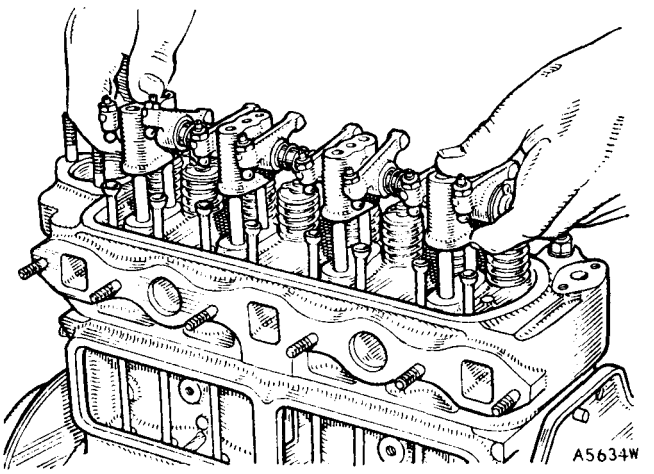

Fig. AA.7

Withdrawing the rocker shaft assembly from the cylinder head

Remove the four manifold attachment nuts and washers which remain in place after the air cleaner has been removed and remove the manifolds.

The inlet and exhaust manifolds will be removed together, since they are attached to each other by four bolts inserted from the top of the inlet manifold. When these bolts have been removed the inlet and exhaust manifolds may be separated, exposing the joint washer.

Refitting the manifolds is a reversal of the above procedure, but before doing so any excessive carbon should be cleaned from the faces and a new gasket fitted.

Section AA.9

REMOVAL AND REPLACEMENT OF ROCKER ASSEMBLY

Drain the cooling system, using a clean container for the coolant if it contains anti-freeze which is to be used again.

Remove the air cleaner as in Section AA.7. Lift off the rocker cover, taking care not to damage the cork gasket. Notice that under the right-hand front rocker stud nut is a special locking plate on engines prior to No. 88347. Later models have four plates, one for each rocker shaft bracket. Unscrew the eight rocker shaft bracket fixing nuts and five external cylinder head securing nuts **gradually, a turn at a time in the order shown in Fig. AA.5,** until all load has been released.

NOTE.—It is necessary to drain the radiator and slacken the five external cylinder head securing nuts because four of the rocker shaft bracket fixing nuts also

THE MORRIS MINOR ENGINE (Series II) MOVING PARTS

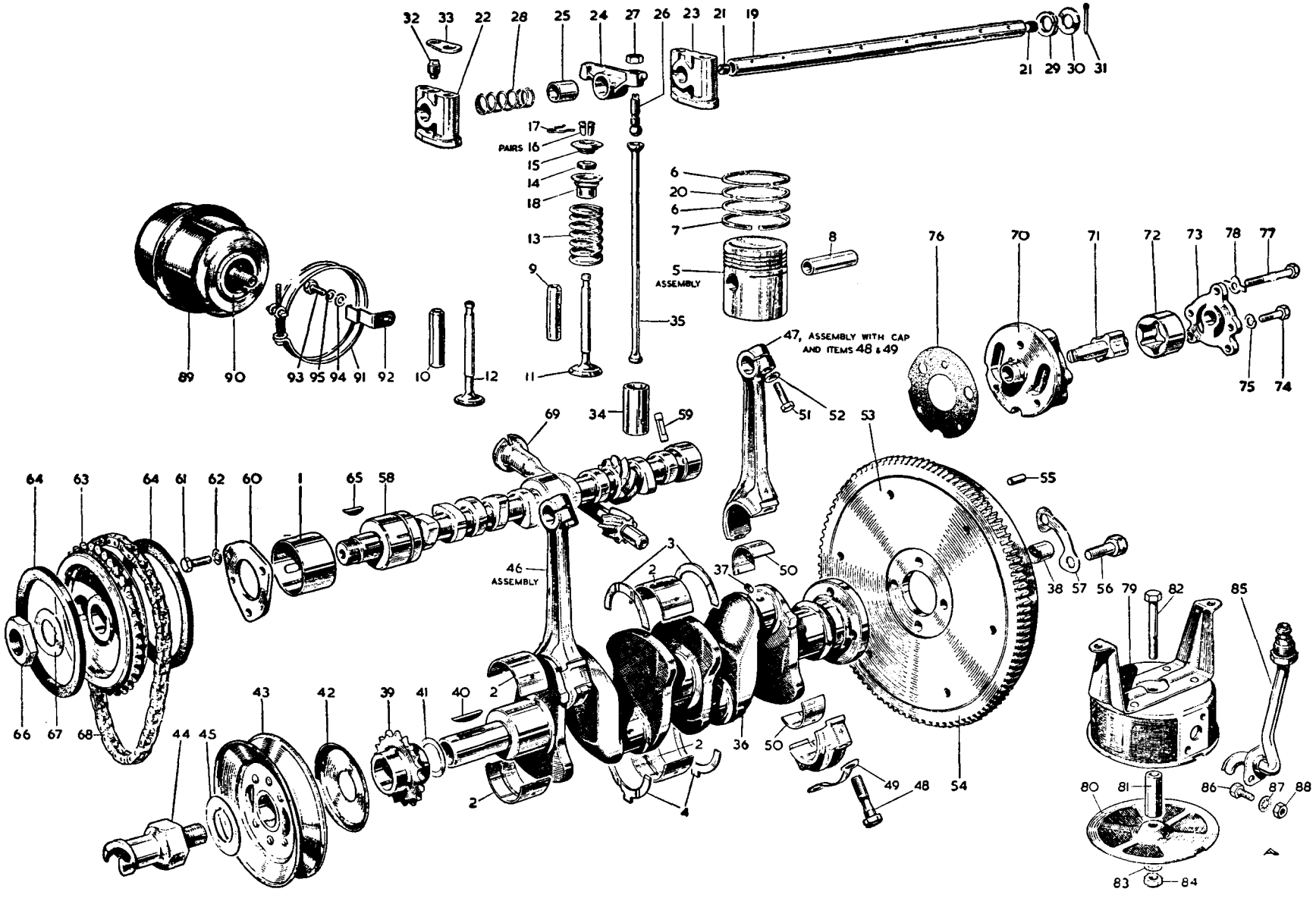

KEY TO THE MORRIS MINOR ENGINE (Series II) MOVING PARTS

No.	Description
1.	Liner—front camshaft bearing.
2.	Bearing—crankshaft main.
3.	Thrust washer—upper—crankshaft.
4.	Thrust washer—lower—crankshaft.
5.	Piston assembly.
6.	Ring—compression—piston—first and third.
7.	Ring—scraper—piston—bottom.
8.	Pin—gudgeon.
9.	Guide—inlet valve.
10.	Guide—exhaust valve.
11.	Valve—inlet.
12.	Valve—exhaust.
13.	Spring—valve.
14.	Oil seal—valve.
15.	Cup—valve spring.
16.	Retainer—valve cap.
17.	Circlip—valve retainer.
18.	Shroud—guide and oil seal retainer.
19.	Shaft—valve rocker.
20.	Ring—compression—piston—second.
21.	Plug—screwed—rocker shaft.
22.	Bracket—tapped hole—shaft.
23.	Bracket—shaft.
24.	Rocker—valve.
25.	Bush—rocker.
26.	Screw—tappet adjusting.
27.	Locknut—adjusting screw.
28.	Spring—rocker.
29.	Washer—D/C—rocker.
30.	Washer—plain—rocker.
31.	Split pin—rocker.
32.	Screw—rocker locating.
33.	Plate—locating screw.
34.	Tappet—valve.
35.	Push-rod—tappet.
36.	Crankshaft.
37.	Restrictor—crankshaft—oil.
38.	Bush—drive gear.
39.	Gear—crankshaft.
40.	Key—gear and pulley.
41.	Washer—gear packing.
42.	Thrower—crankshaft oil.
43.	Pulley—crankshaft.
44.	Nut—starting-handle dog.
45.	Lock washer—nut.
46.	Rod and cap—connecting—1 and 3.
47.	Rod and cap—connecting—2 and 4.
48.	Bolt—cap.
49.	Lock washer—cap bolt.
50.	Bearing—connecting rod.
51.	Screw—gudgeon pin clamp.
52.	Spring washer—clamp screw.
53.	Flywheel.
54.	Ring—flywheel starter.
55.	Dowel—flywheel to clutch.
56.	Screw—flywheel to crankshaft.
57.	Lock washer—screw.
58.	Camshaft.
59.	Pin—oil pump drive.
60.	Plate—camshaft locating.
61.	Screw—plate to block.
62.	Washer—shakeproof—screw.
63.	Gear—camshaft.
64.	Ring—gear tensioner.
65.	Key—gear.
66.	Nut—camshaft.
67.	Lock washer—nut.
68.	Chain—timing.
69.	Spindle—distributor drive.
70.	Body—oil pump.
71.	Shaft with inner rotor—pump.
73.	Cover—pump.
74.	Screw—pump cover.
75.	Spring washer—screw.
76.	Joint—pump to block.
77.	Bolt—pump to block.
78.	Lock washer—bolt.
79.	Body with bracket—oil strainer.
80.	Cover—strainer body.
81.	Distance piece—strainer.
82.	Bolt—cover.
83.	Washer—shakeproof—bolt.
84.	Nut—bolt.
85.	Pipe—oil suction.
86.	Screw—pipe to strainer.
87.	Washer—shakeproof screw.
88.	Nut—screw.
89.	Filter (external).
90.	Ring—filter—sealing.
91.	Clip—filter—locking.
92.	Bracket—filter.
93.	Screw—bracket to block.
94.	Washer—bracket screw.
95.	Spring washer—screw.
96.	Plug—plain.
97.	Plate—rocker bracket stud.
98.	Washer—lock.
99.	Body.
100.	Rotor.
101.	Vanes.
102.	Sleeve—rotor.
103.	Cover.
104.	Bolt—cover.
105.	Washer—bolt.
106.	Bolt—body.
107.	Washer—bolt.
108.	Washer—lock—oil pump.

secure the cylinder head, and if the five external cylinder head fixing nuts are not slackened distortion may result and water find its way from the cooling system into the cylinders and sump.

Completely unscrew the eight rocker shaft bracket nuts and remove the rocker assembly complete with brackets and rockers. Withdraw the eight push-rods, storing them carefully so that they may be replaced in the same positions. To dismantle the rocker shaft assembly first remove the grub screw which locates the rocker shaft in the front rocker mounting bracket, and remove the split pins, flat washers, and spring washers from each end of the shaft. Slide the rockers, brackets, and springs from the shaft.

Unscrew the plugs from each end of the shaft on early models and clean out the oilways. On later models the plug at one end only is screwed for removal.

Reassembly and replacement is a reversal of the above procedure, replacing the rockers and springs in their original positions on the shaft. Remember to replace the rocker shaft locating screw lock plate or the four plates on later models, and when replacing the rocker cover replace it with the vent pipe to the front. Check that the two cap nut rubber bushes and the rocker cover cork gasket are undamaged. If they are found to be faulty fit new ones, or oil leaks may result.

Section AA.10

REMOVAL AND REPLACEMENT OF CYLINDER HEAD ASSEMBLY

Raise the bonnet of the car and remove the split pin from the clevis pin securing the prop to the bonnet. Secure the lid in the open position, using a suitable piece of cord attached to some convenient point.

Drain the water from the cooling system by means of the two drain taps. One is situated at the base of the radiator and the other at the rear left-hand side of the engine. If anti-freeze mixture is in use it should be drained into a suitable clean container and carefully preserved for future use.

Disconnect the negative cable from the battery by extracting the terminal screw and removing the cable lug from the battery terminal.

Slacken both the hose retaining clips on the hose which connects the radiator to the thermostat housing. Push the hose onto the radiator pipe so that it is clear of the thermostat housing. Extract the three thermostat housing securing nuts and remove the housing and thermostat.

Remove the air cleaner and carburetter as described in Section AA.7.

Remove the rocker cover.

Detach the high-tension cables and remove the sparking plugs, taking care not to damage the porcelain insulators.

Remove the suction advance pipe clip from its fixture at the rear right-hand top of the cylinder head. If the car is fitted with a heater remove the heater hose from the heater control valve, which is also situated at the rear right-hand top of the cylinder head, by slackening the retaining clip.

Remove the inlet and exhaust manifolds as described in Section AA.8.

Remove the rocker assembly as described in Section AA.9, not forgetting to slacken the five external cylinder head holding nuts at the same time. Withdraw the push-rods, keeping them in order of removal.

The cylinder head may now be removed.

NOTE.—**To facilitate breaking the cylinder head joint tap each side of the head with a hammer, using a piece of wood interposed to take the blow. When lifting the head a direct pull should be given so that the head is pulled evenly up the studs.**

Refitting the cylinder head

Make sure that the surfaces of both the cylinder block and the cylinder head are clean; it is not necessary to use jointing compound or grease for the gasket. It will be noticed that the cylinder head gasket is marked 'FRONT' and 'TOP' so that it will be replaced correctly. Having slipped the gasket over the studs, next lower the cylinder head into position and fit the five cylinder head securing nuts finger tight.

Insert the push-rods, replacing them in the positions from which they were taken. Replace the rocker assembly and securing nuts and fit the nuts finger tight. Tighten all

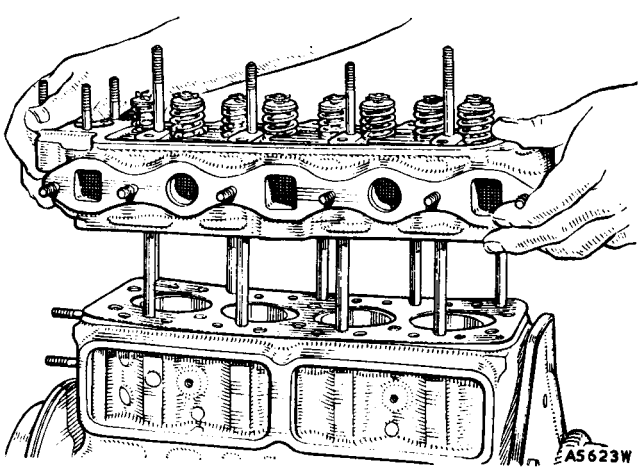

Fig. AA.8

Replacing the cylinder head, taking care to keep it parallel to the upper face of the cylinder block

13 nuts gradually, a turn at a time, in the order given in Fig. AA.5.

Whenever the head has been disturbed or the valves have been ground in or otherwise disturbed it is necessary to check the valve clearances (as in Section AA.21). These, of course, will be finally adjusted after the engine has been completely reassembled and run for a short period.

Replace the inlet and exhaust manifolds.

If a heater is fitted attach the heater hose to the heater control valve and refit the suction advance pipe to its fixture at the rear right-hand side of the cylinder head.

Replace the rocker cover, being careful to fit its cork gasket correctly into position and securing it by its nuts, washers, and rubber cups. Do not fit the air cleaner bracket.

Replace the carburetter (as in Section AA.7), but do not fit the air cleaner at this stage or it will have to be removed again later to check the valve clearances. Place the thermostat and its housing in position and secure it by means of the three nuts.

Reconnect the radiator hose to the thermostat housing.

Connect the negative cable to the battery terminal, close the drain taps, and refill the cooling system.

Check, adjust, and replace the sparking plugs, and clip on the high-tension leads.

Switch on the ignition and check the fuel system for leaks.

Start the engine and run it until the normal working temperature is reached. Remove the rocker cover and check the valve clearances (see Section AA.21). Replace the rocker cover and air cleaner.

Refit the prop to the bonnet lid.

Section AA.11

REMOVAL AND REPLACEMENT OF PISTON AND CONNECTING ROD

The pistons and connecting rods must be withdrawn from the top of the cylinder block.

The first step in their removal is to remove the cylinder head as in Section AA.10. Drain and remove the sump and oil strainer as in Sections AA.1 and AA.2.

Unlock and remove the big-end bolts and remove the bearing cap. Release the connecting rod from the crankshaft.

Withdraw the piston and connecting rod from the top of the cylinder block and refit the bearing cap. The

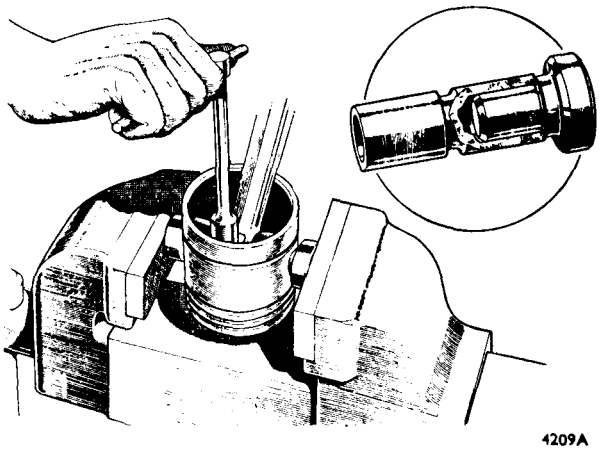

Fig. AA.9

The use of special gudgeon pin plugs to hold the connecting rod and piston assembly while the gudgeon pin clamp bolt is tightened or loosened is essential

big-end bearing caps are offset, and the connecting rods in Nos. 1 and 3 cylinders are interchangeable when new, as are those for Nos. 2 and 4 cylinders. When used parts are replaced after dismantling it is essential that they should be fitted in their original positions. In order to ensure this, mark each cap and connecting rod on their sides which are fitted together with the number of the cylinder from which they were taken.

Replacement of the piston and connecting rod is a direct reversal of the above, but the piston ring gaps should be set at 180° to each other.

It is essential that each connecting rod and piston assembly should be replaced in its own bore and fitted the same way round, i.e. with the split skirt opposite to the thrust side and the gudgeon pin clamp screw on the same side as the split skirt, on the camshaft side of the engine. The piston crowns are marked 'FRONT' to facilitate this.

Do not forget to refit the big-end bearings in their original positions.

The top and bottom halves of new bearings are, however, interchangeable, each being drilled for cylinder wall lubrication.

Section AA.12

DISMANTLING AND REASSEMBLING PISTON AND CONNECTING ROD

The gudgeon pin is rigidly held in the split little-end of the connecting rod by a clamp bolt engaging the central groove of the gudgeon pin.

Before the piston and gudgeon pin can be dismantled from the connecting rod it is necessary to remove the clamp screw. To enable the assembly to be held in a vice for this operation without damage special holding plugs should be inserted in each end of the gudgeon pin (see Fig. AA.9).

Unscrew the gudgeon pin clamp screw and remove it completely.

Push out the gudgeon pin.

Reassembly is a reversal of the above.

IMPORTANT.—Attention must be given to the following points when assembling the piston to the connecting rod:

(1) That the piston is fitted the same way round on the connecting rod. The crown of the piston is marked 'FRONT' to assist this and the connecting rod is fitted with the gudgeon pin clamp screw on the camshaft side.

(2) That the gudgeon pin is positioned in the connecting rod so that its groove is in line with the clamp screw hole.

(3) That the clamp screw spring washer has sufficient tension.

(4) That the clamp screw will pass readily into its hole and screw freely into the threaded portion of the little-end, and also that it will hold firmly onto the spring washer.

Section AA.13

FITTING GUDGEON PINS

A certain amount of selective assembly must be used when fitting new gudgeon pins. They must be a thumb-push fit for three-quarters of their travel, to be finally tapped home with a raw-hide mallet. This operation must be carried out with the piston and gudgeon pin cold.

Section AA.14

REMOVAL AND REPLACEMENT OF PISTON RINGS

If no special piston ring expander is available use a piece of thin steel such as a smoothly ground hacksaw blade or disused ·020 in. (·50 mm.) feeler gauge.

Raise one end of the ring out of its groove. Insert the steel strip between the ring and the piston. Rotate the strip round the piston, applying slight upward pressure to the raised portion of the ring until it rests on the land above the ring grooves. It can then be eased off the piston.

Do not remove or replace the rings over the piston skirt, but always over the top of the piston.

Before fitting new rings clean the grooves in the piston to remove any carbon deposit. Care must be taken not to remove any metal, or side-play between the ring and the groove will result, with consequent excessive oil consumption and loss of gas-tightness.

Piston marking	*Suitable bore size*	*Metric equivalent*
STANDARD	2·2807 to 2·2810 in.	57·930 to 57·937 mm.
OVERSIZE		
+·010 in. (·254 mm.)	2·2907 to 2·2910 in.	58·184 to 58·191 mm.
+·020 in. (·508 mm.)	2·3007 to 2·3010 in.	58·438 to 58·445 mm.
+·030 in. (·762 mm.)	2·3107 to 2·3110 in.	58·692 to 58·699 mm.
+·040 in. (1·016 mm.)	2·3207 to 2·3210 in.	58·946 to 58·953 mm.

Test new rings in the cylinder bore to ensure that the ends do not butt together. The best way to do this is to insert the piston approximately 1 in. (2·54 cm.) into the cylinder bore and push the ring down onto the top of the piston and hold it there in order to keep the ring square with the bore. The correct ring gap is ·006 to ·011 in. (·15 to ·28 mm.).

On later models a tapered compression ring is fitted in the second groove from the top of the piston, and, commencing at Engine No. 121585, a tapered ring is also fitted in the third groove to improve the oil control (see Section AA.38). It is important that the narrow side is fitted to the top, and to identify this the top face is marked with the letter 'T'

Section AA.15

PISTON SIZES AND CYLINDER BORES

In production, pistons are fitted by selective assembly, and to facilitate this the pistons are stamped with identification figures on their crowns.

A piston stamped with a figure 2 enclosed in a diamond is for a bore bearing a similar stamp.

In addition to the standard pistons there is a range of four oversize pistons available for service purposes.

Oversize pistons are marked with the actual oversize dimensions enclosed in an ellipse. A piston stamped ·020 is only suitable for a bore ·020 in. (·508 mm.) larger than the standard bore and, similarly, pistons with other markings are only suitable for the oversize bore indicated.

The piston markings indicate the actual bore size to which they must be fitted, the requisite running clearance being allowed for in the machining.

After reboring an engine, or whenever fitting pistons differing in size from those removed during dismantling, ensure that the size of the piston fitted is stamped clearly on the top of the cylinder block alongside the appropriate cylinder bore (see Fig. AA.10).

Pistons are supplied in the sizes indicated in the table on page AA.14.

Section AA.16

REMOVAL AND REPLACEMENT OF VALVES

Remove the cylinder head as in Section AA.10.

Before removing the valves from the cylinder head stamp the head of each valve with a number to indicate the position to which it must be returned. Commence with No. 1 at the front of the engine.

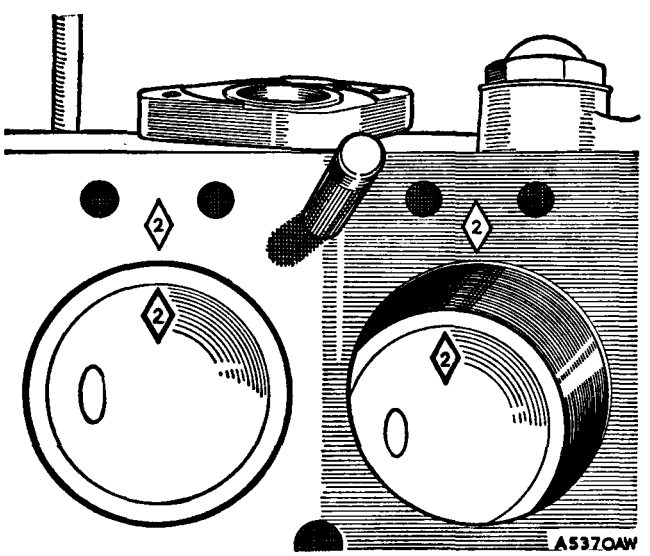

Fig. AA.10

The pistons are marked on their crowns with a figure enclosed in a diamond to indicate their grading size, which should correspond with the similar grading size on the cylinder block adjacent to the bore. The piston crowns are also stamped 'FRONT' to indicate which way they should be fitted, and 'oversize' pistons have their oversize dimension indicated by figures in a small ellipse

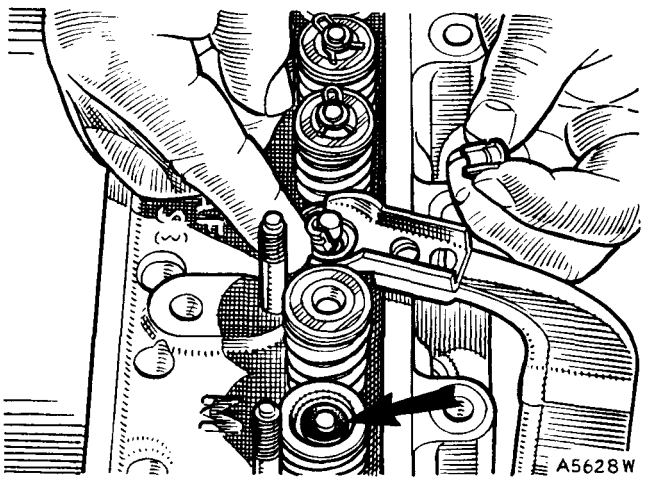

Fig. AA.11

The arrow indicates the location of the synthetic rubber oil seal and retainer on the valve stem prior to fitting the spring cap. Also shown in this illustration is the use of the spring compressor while replacing the split conical valve cotters

Compress the valve springs with a special valve spring compressor and remove the valve circlip and the two valve cotters. Release the valve spring and remove the compressor, the valve spring cap, the valve oil seal retainer and seal, and the valve spring.

Withdraw the valve from the guide.

Keep the valves in their relative positions when removed from the engine to ensure replacement in their original valve guides. The exhaust valve heads are concave and they are smaller than the inlet valves.

To replace the valves place each valve in its guide and replace the spring and oil seal retainer. Fit a new synthetic rubber oil seal, chamfered side downwards. Do not refit the old one or oil-tightness may be lost. The oil seals are fitted more easily if they have been soaked in engine oil for a short period before use. Replace the valve spring cap and compress the spring. Refit the two valve cotters and secure them with the valve circlip. Remove the compressor.

Section AA.17

DECARBONIZING

Remove the cylinder head as described in Section AA.10.

Withdraw the valves as described in Section AA.16.

Remove the cylinder head gasket and plug the waterways with a clean rag.

If special equipment is not available for decarbonizing it will be necessary to scrape the carbon deposit from

THE MORRIS MINOR ENGINE (Series II)

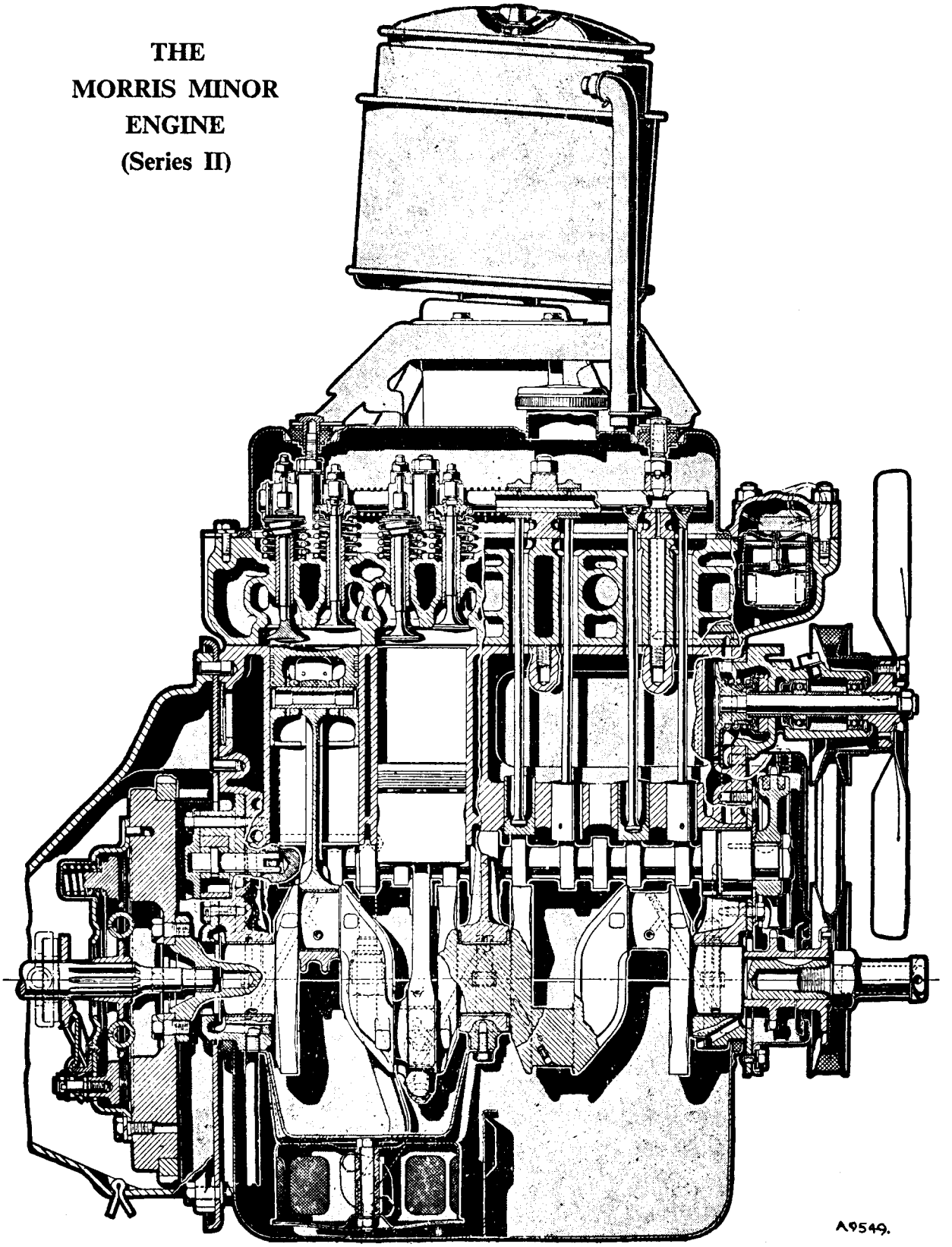

the piston crowns, cylinder block, and cylinder head, using a blunt scraper.

A ring of carbon should be left round the periphery of the piston crown and the rim of carbon round the top of the cylinder bore should not be touched. To facilitate this an old piston ring can be sprung into the bore so that it rests on top of the piston.

The cylinder head is next given attention. The sparking plugs must be removed, cleaned, and adjusted. Clean off the carbon deposit from the valve stems, valve ports, and combustion spaces of the cylinder head. Remove all traces of carbon dust with compressed air or by the vigorous use of a tyre pump and then thoroughly clean with paraffin and dry off.

Fit a new cylinder head gasket when replacing the head if the old one has been damaged, noting that the gasket is marked to indicate the top face and the front end.

Section AA.18

GRINDING AND TESTING VALVES AND VALVE SEATINGS

Remove the valves as in Section AA.16.

Each valve must be cleaned thoroughly and carefully examined for pitting. Valves in a pitted condition should be refaced with a suitable grinder or new valves should be fitted. Remember to stamp any new valve with the number of the port to which it is fitted.

If valve seats show signs of pitting or unevenness they should be trued by the use of a suitable grinder or special cutter. When using a cutter care must be exercised to remove only as little metal as is necessary to ensure a true surface.

When grinding a valve onto its seating the valve face should be smeared lightly with fine- or medium-grade carborundum paste and then lapped in with a suction grinder (Service tool 18G 29). Avoid the use of excessive quantities of grinding paste and see that it remains in the region of the valve seating only.

A light coil spring placed under the valve head will assist considerably in the process of grinding. The valve should be ground to its seat with a semi-rotary motion and occasionally allowed to rise by the pressure of the light coil spring. This assists in spreading the paste evenly over the valve face and seat. It is necessary to carry out the grinding operation until a dull, even, mat surface free from blemish is produced on the valve seat and valve face.

On completion, the valve seat and ports should be cleaned thoroughly with paraffin-soaked rag, dried, and then thoroughly cleaned by compressed air. The valves should be washed in paraffin and all traces of grinding paste removed.

Fit a new oil seal when refitting the valves (see Section AA.16) and ensure that the chamfered side of the seal is downwards.

Section AA.19

REMOVAL AND REPLACEMENT OF VALVE GUIDES

Remove the cylinder head as shown in Section AA.10.

Remove the appropriate valve and spring as in Section AA.16. Rest the cylinder head with its machined face downwards on a clean surface and drive the valve guide downwards into the combustion space with a suitable-sized drift. This should take the form of a hardened-steel

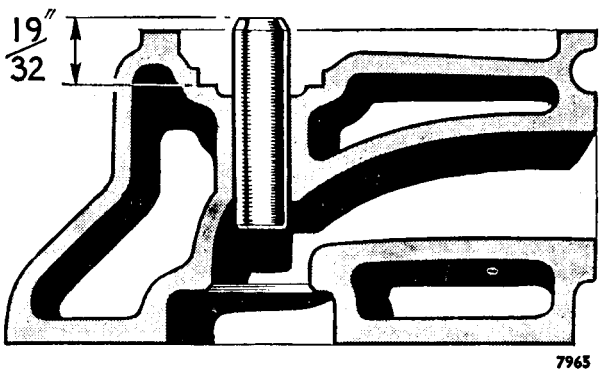

Fig. AA.12

When refitting valve guides it is most important that they should be inserted into the head for the correct distance

punch $\frac{7}{16}$ in. (11 mm.) in diameter and not less than 4 in. (10 cm.) in length, with a locating spigot $\frac{9}{32}$ in. (7·14 mm.) diameter machined on one end for a length of 1 in. (2·5 cm.) to engage the bore of the guide.

When fitting new valve guides these should be driven in from the top of the cylinder head. The inlet valve guides must be inserted with the end with the largest chamfer at the top, and the exhaust valve guides should have their counterbored ends at the bottom. The valve guides should be driven into the combustion spaces until they are $\frac{19}{32}$ in. (15·1 mm.) above the machined surface of the valve spring seating (see Fig. AA.12).

Section AA.20

REMOVAL AND REPLACEMENT OF TAPPETS

Remove the carburetter (see Section AA.7) and the rocker cover.

Remove the manifolds (see Section AA.8).

Disconnect the high-tension leads from the sparking plugs.

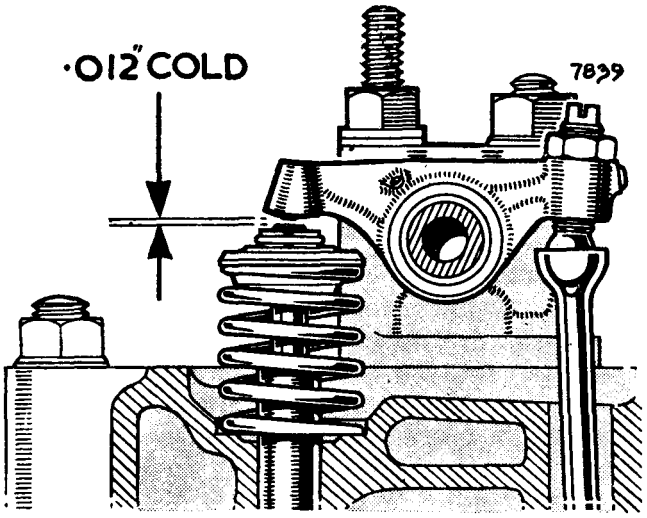

Fig. AA.13

The correct valve rocker clearance is here shown. It must on no account be departed from

Remove the rocker assembly as in Section AA.9 and withdraw the push-rods, keeping them in their respective positions to ensure their replacement onto the same tappets. Remove the tappet covers and lift out the tappets, also keeping them in the same locations.

New tappets should be fitted by selective assembly so that they just fall into their guides under their own weight when lubricated.

Assembly is a reversal of the above procedure, but care should be taken to see that the tappet cover joints are oil-tight and that the rockers are adjusted to give the correct valve clearance.

Section AA.21

ROCKER ADJUSTMENT

If the engine is to give its best performance and the valves are to retain their maximum useful life it is essential to maintain the correct valve clearance. Accordingly it is recommended that the clearance be checked at the specified intervals and any necessary adjustments made.

The clearance for both the inlet and exhaust valves is ·012 in. (·305 mm.) when the engine is cold. The engine has been designed to operate with this clearance and no departure from it is permissible.

Provision for adjusting the valve clearance is made in the rocker arm by an adjustable screw and locknut.

The rocker adjusting screw is released by slackening the hexagon locknut with a spanner while holding the screw against rotation with a screwdriver. The valve clearance can then be set by carefully rotating the rocker screw while checking the clearance with a feeler gauge. This screw is then re-locked by tightening the hexagon locknut while again holding the screw against rotation.

It is important to note that while the clearance is being set the tappet of the valve being operated upon is on the back of its cam, i.e. opposite to the peak.

As this cannot be observed accurately the rocker adjustment is more easily carried out in the following order, and this also avoids turning the engine over more than is necessary.

Adjust	No. 1	rocker	with	No. 8	valve	fully	open	
,,	,, 3	,,	,,	,, 6	,,	,,	,,	
,,	,, 5	,,	,,	,, 4	,,	,,	,,	
,,	,, 2	,,	,,	,, 7	,,	,,	,,	
,,	,, 8	,,	,,	,, 1	,,	,,	,,	
,,	,, 6	,,	,,	,, 3	,,	,,	,,	
,,	,, 4	,,	,,	,, 5	,,	,,	,,	
,,	,, 7	,,	,,	,, 2	,,	,,	,,	

Section AA.22

CHECKING VALVE TIMING

Set No. 1 cylinder inlet valve to ·024 in. (·61 mm.) clearance with the engine cold, and then turn the engine until the valve is about to open.

The indicating groove in the flange of the crankshaft pulley should then be opposite the pointer on the timing cover on early engines or the largest pointer below the crankshaft pulley on later engines, i.e. the No. 1 inlet valve should be about to open at T.D.C. and No. 4 piston will be at T.D.C. on its compression stroke.

NOTE.—Do not omit to reset the inlet valve clearance

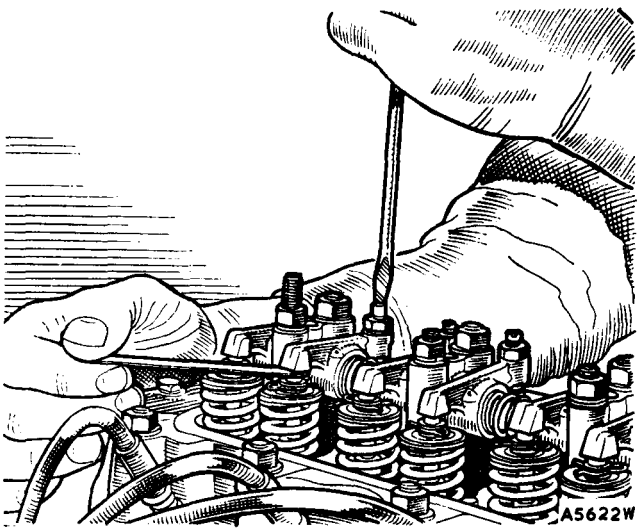

Fig. AA.14

Setting the valve clearance with a screwdriver and feeler gauge

to ·012 in. (·305 mm.) with the engine cold when the timing check has been completed. A clearance of ·019 in. (·48 mm.) brings the opening position of the valve to 5° B.T.D.C. It is not possible to check the valve timing accurately with the normal running valve clearance.

Section AA.23

REMOVAL AND REPLACEMENT OF TIMING COVER

Drain the cooling system (as in Section AA.10) and remove the radiator (see Section AA.26).

Slacken the dynamo attachment bolts and remove the belt.

Bend back the tab on the starting dog nut locking washer. Unscrew the starting dog nut and remove the locking washer.

Pull off the crankshaft pulley.

The timing cover is secured by four large bolts and six small ones. Each bolt has a shakeproof washer and a plain washer. Remove all 10 bolts with their washers and remove the timing cover.

Care should be taken not to damage the timing cover gasket. If it is damaged clean the face of the cover flange and the front engine mounting plate and fit a new gasket when reassembling.

The oil seal situated in the timing cover should also be renewed if necessary.

It should be noted that the oil thrower, which is located behind the crankshaft pulley, is fitted with its concave side facing forward.

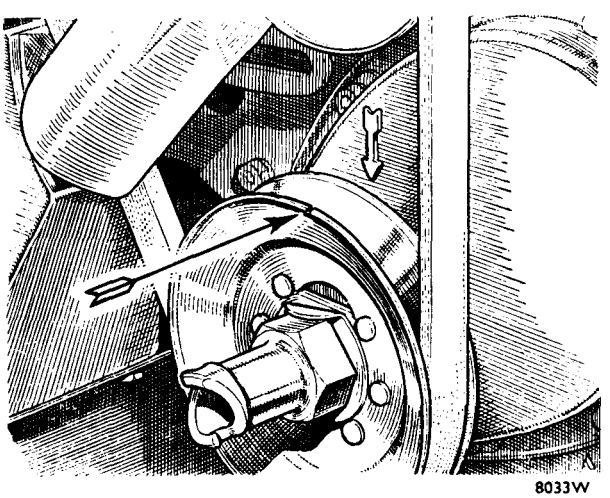

Fig. AA.15

The mark on the pulley flange and the pointer on the timing cover which indicate the T.D.C. position of No. 1 and No. 4 pistons on early models. Later engines have a bracket with three pointers below the pulley, the longest of which indicates T.D.C. and the others 5° and 10° B.T.D.C. respectively

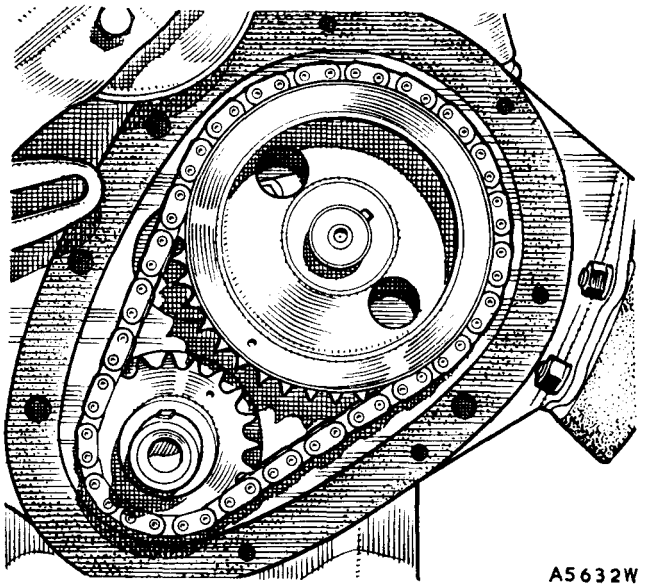

Fig. AA.16

The timing chain and chain wheel assembly, showing the location of the two keyways and the two timing marks on the rims of the chain wheels

When refitting the cover it is important to ensure that the seal is centralized on the crankshaft and Service tool 18G 138 is available for the purpose. In the absence of the tool, the crankshaft pulley can be used as follows: If a rubber seal is fitted to the cover fill the annular groove between the lips with grease. Lubricate the hub of the pulley and push it into the seal at the same time turning it to avoid damaging the felt or the lips of a rubber seal. Slide the pulley onto the shaft with the keyway in line with the key in the crankshaft. Turn the cover as necessary to align the setscrew holes with those in the crankcase taking care not to strain the cover against the flexibility of the seal; insert the cover setscrews and tighten up. Refit and tighten the pulley securing screw.

Section AA.24

REMOVAL AND REPLACEMENT OF TIMING CHAIN

Remove the timing cover and oil thrower as in Section AA.23.

Unlock and remove the camshaft chain wheel nut and remove the nut and lock washer. Note that the locating tag on the lock washer fits into the keyway of the camshaft chain wheel.

The camshaft and crankshaft chain wheels may now be removed, together with the timing chain, by easing

each wheel forward a fraction at a time with suitable small levers.

As the crankshaft gear wheel is withdrawn care must be taken not to lose the gear packing washers immediately behind it. When reassembling, replace the same number of washers as was found when dismantling unless new camshaft or crankshaft components have been fitted which will disturb the alignment of the two gear wheels. To determine the thickness of washers required place a straight-edge across the sides of the camshaft wheel teeth and measure with a feeler gauge the gap between the straight-edge and the crankshaft gear.

When replacing the timing chain and gears set the crankshaft with its keyway at T.D.C. and the camshaft with its keyway approximately at the one o'clock position as seen from the front. Assemble the gears into the timing chain with the two marks on the gear wheels opposite to each other, as in Fig. AA.16. Keeping the gears in this position, engage the crankshaft gear keyway with the key on the crankshaft and rotate the camshaft until the camshaft gear keyway and key are aligned. Push the gears onto the shafts as far as they will go and secure the camshaft gear with the lock washer and nut.

Replace the oil thrower, concave side forward, and the remaining components as detailed in Section AA.23.

Section AA.25

REMOVAL AND REPLACEMENT OF ENGINE

The engine may be removed from the car, leaving the gearbox in the frame.

Remove the clevis pin securing the bonnet prop to the bonnet lid and secure the bonnet in the open position.

Drain the oil from the engine.

Drain the water from the cooling system as in Section AA.10. If anti-freeze mixture is in use it should be drained into a clean container so that it may be used again.

Disconnect the battery by removing the lead from the positive terminal. Release the flexible petrol pipe from the union on the petrol pump. Remove the carburetter and air cleaner as described in Section AA.7.

Disconnect and remove the bottom and top radiator hoses, and the heater pipe connection at the radiator (if the car is fitted with a heater). Remove the four set bolts and spring washers which attach the radiator to the grille and lift out the radiator. Disconnect the heater pipe from the control valve (on cars fitted with heaters).

Slacken the two exhaust flange clamp bolts and disconnect the exhaust pipe.

Disconnect the dynamo and starter leads, and the low-tension lead from the distributor. Remove the high-tension lead from the coil.

Disconnect the oil gauge pipe from the cylinder block.

Support the engine with suitable lifting tackle. Remove the four nuts, bolts, and spring washers securing the left-hand front engine mounting bracket to the tie-plate. Remove the two nuts and washers which secure each of the two front engine mounting brackets to the mounting rubbers.

Disconnect the clutch lever return spring from the rear engine mounting plate.

Support the front end of the gearbox by means of a suitable support. Remove the set bolts and nuts and bolts which secure the gearbox to the engine, noting that two nuts and bolts also attach the starter.

Move the engine forward clear of the clutch and then lift it upwards, turning it at right angles to clear the radiator grille.

Replacement of the engine is a reversal of the above procedure.

Refill the engine with oil to Ref. A (page PP.2).

Section AA.26

REMOVAL AND REPLACEMENT OF POWER UNIT

Remove the clevis pin securing the bonnet to the bonnet prop and secure the bonnet in the open position.

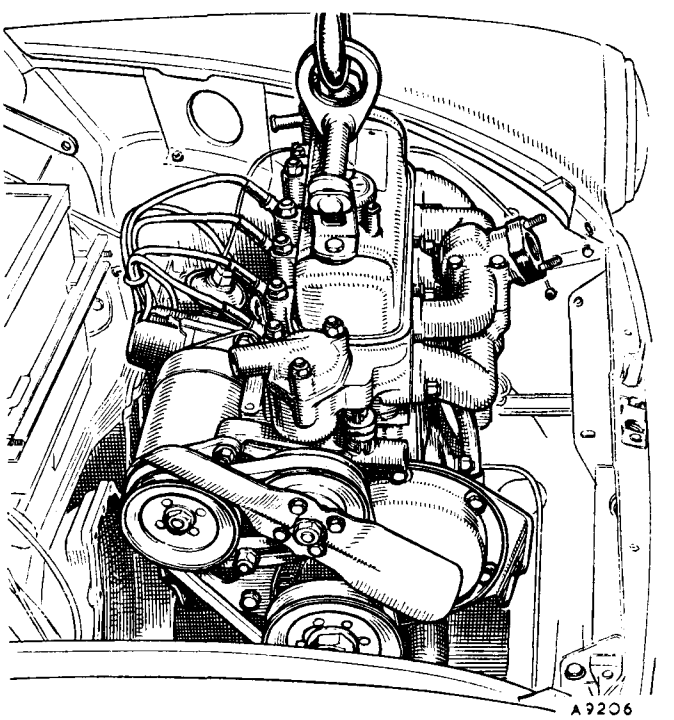

Fig. AA.17

The engine, without the gearbox, can be removed from the car without disturbing the radiator if it is carefully turned to lie across the car while it is being lifted out

Drain the oil from the engine and gearbox. Drain the water from the cooling system. If anti-freeze mixture is in use it should be drained into a clean container so that it may be used again.

Disconnect the battery by removing the lead from the positive terminal.

Release the flexible petrol pipe from the union of the petrol pump. Remove the carburetter and air cleaner as described in Section AA.7.

Slacken the two exhaust flange clamp bolts and disconnect the exhaust pipe.

Disconnect and remove the bottom and top radiator hoses. If the car is fitted with a heater disconnect the heater pipes from the radiator base tank and the control valve on the rear end of the cylinder head.

Disconnect the dynamo and starter leads and the low-tension lead from the distributor. Remove the high-tension lead from the coil.

On later models where the coil is mounted on the dynamo only disconnect the two low-tension wires to 'CB' and 'SW' on the coil.

Disconnect the oil gauge pipe from the cylinder block. Remove the front bumper assembly, which is secured to the frame by two nuts.

Release the radiator mask by removing the nuts, bolts, and washers securing the grille surround to the wings and frame. The plated surround each side of the radiator is secured by three 2 B.A. nuts, accessible beneath the wing.

Remove the split pin and spring washer from the bonnet catch-operating arm and disconnect the operating rod.

Disconnect the sidelamps from the snap connectors attached to the side valances.

Lift out the radiator and grille assembly.

Disconnect the clutch lever return spring from the rear engine mounting plate.

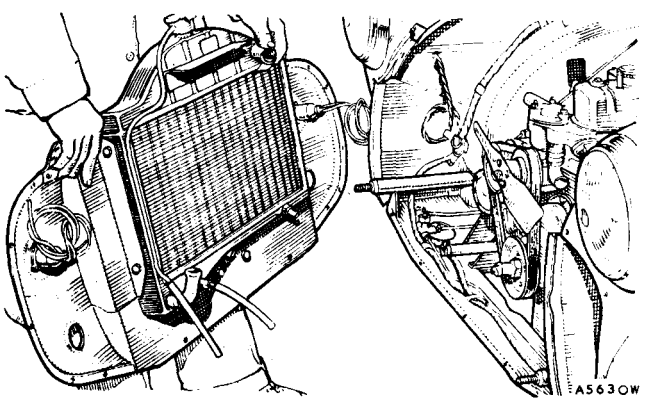

Fig. AA.18

Withdrawing the radiator and radiator grille assembly prior to withdrawing the power unit

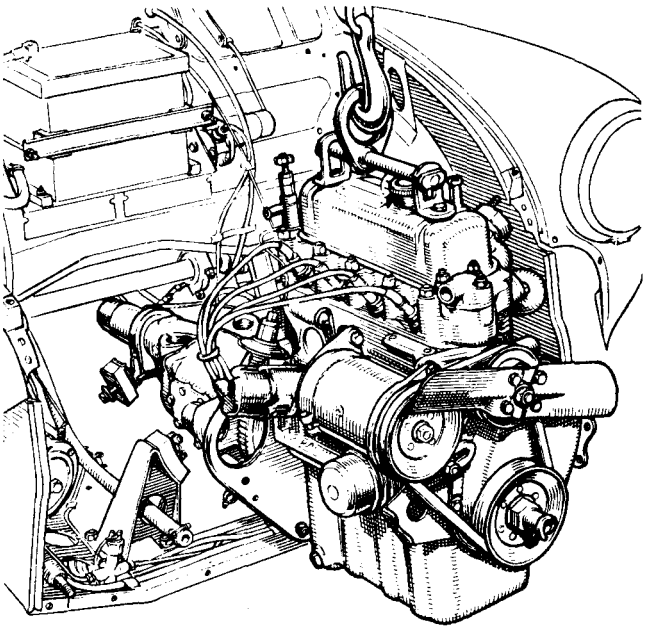

Fig. AA.19

Withdrawing the power unit, complete with gearbox in position, by means of suitable lifting tackle

Disconnect the two operating rods from the clutch relay lever by removing the split pins and anti-rattle washers. Withdraw the operating rod from the clutch lever. Disconnect the speedometer cable from the gearbox.

Take out the two set bolts and spring washers securing the relay lever bracket to the main frame. Remove the packing plate, bracket, and bushes. Take care not to lose the washer between the inner bush and the lever. Remove the thrust spring from the opposite end of the lever.

Support the weight of the power unit with suitable lifting tackle. Remove the front carpet and felt and the gearbox cover-plate. Note that the two innermost screws on either side of the gearbox tunnel are longer than the rest and screw into the gearbox support member.

Take out the three set bolts and remove the gear lever assembly.

Remove the engine steady cable (see Section AA.36).

Remove the nuts with spring and flat washers which secure the rear mounting rubbers to the cross-member. Take out the four set bolts securing the cross-member to the frame, noting that the forward one on the left-hand side also secures the earthing cable.

Lower the rear of the power unit carefully until the cross-member can be removed.

Remove the four nuts, bolts, and spring washers which secure the front left-hand engine mounting bracket to the tie-plate.

Remove the nuts and washers which secure the front engine mounting rubbers to each side of the mounting plate. Raise the power unit and remove the left-hand mounting bracket and rubber assembly. Move the unit sideways to clear the right-hand mounting rubber studs, then raise the unit and manœuvre it forward clear of the car.

Reassembly is carried out in the reverse order to that of dismantling. It should be noted, however, that when reconnecting the clutch-operating mechanism the longest end of the relay lever shaft carries the thrust spring as it is fitted into the spherical bush.

It will be found to be easier to re-engage the gearbox mainshaft splines with the propeller shaft if the car is rolled backwards as the power unit is offered into position. Do not fully tighten the engine mounting rubber bolts until the mountings are supporting the full weight of the power unit.

Refill the engine and gearbox with oil to Ref. A (page PP.2.)

Section AA.27

REMOVAL AND REPLACEMENT OF CAMSHAFT

Remove the radiator (see Section AA.26) and take off the rocker assembly (see Section AA.9).

Remove the inlet and exhaust manifold assembly (see Section AA.8).

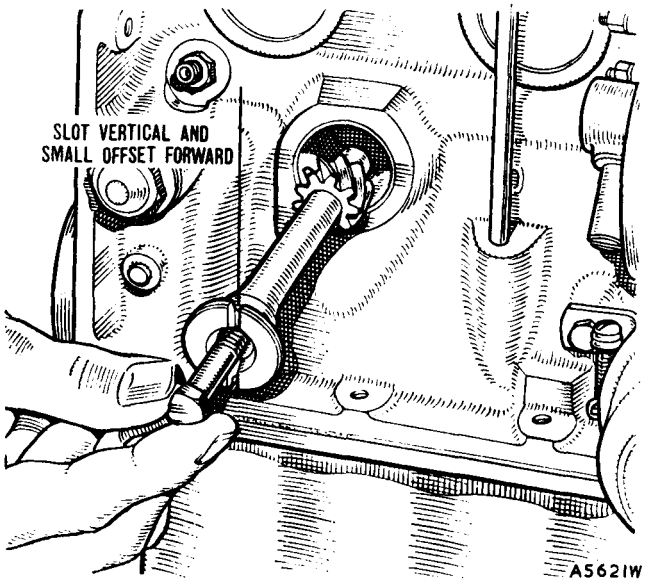

Fig. AA.20

Withdrawing the distributor drive spindle by screwing a tappet cover bolt into its tapped end. The position of the drive slot when replacing the drive spindle with No. 4 cylinder at T.D.C. on the firing stroke

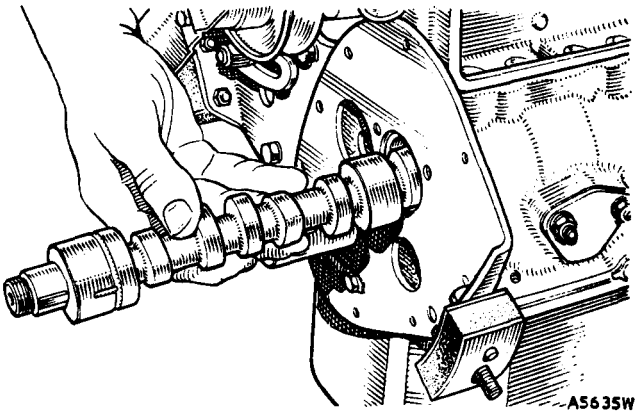

Fig. AA.21

Withdrawing the camshaft from the engine after removing the timing chain tappets and distributor drive

Remove the push-rods and take out the tappets (see Section AA.20).

Remove the timing cover, timing chain, and gears (see Sections AA.23 and AA.24).

Disconnect the high-tension leads from the coil and sparking plugs and the low-tension wire from the side of the distributor.

Disconnect the suction advance unit pipe from the distributor and take out the two bolts with flat washers securing the distributor to the housing. Do not slacken the clamping plate bolt or the ignition timing setting will be lost.

Withdraw the distributor.

Take out the bolt securing the distributor housing to the cylinder block. Using one of the tappet cover bolts as an extractor screwed into the tapped end of the distributor drive spindle, withdraw the spindle.

Take out the three set screws and shakeproof washers which secure the camshaft locating plate to the cylinder block and withdraw the camshaft.

If the front camshaft bearing clearance is excessive a new bearing should be fitted. To do this drift out the old bearing towards the rear of the engine and press in a new one. Ensure that the oil holes in the bearing line up with the oil passages in the cylinder block. The front bearing must be reamed to give ·001 to ·002 in. (·025 to ·051 mm.) diametral clearance. The centre and rear camshaft bearings are cast in the block and are therefore non-renewable.

Replacement of the camshaft is a reversal of the above procedure. Remember to align and engage the drive pin in the rear end of the camshaft with the slot in the oil pump drive shaft when replacing the camshaft in its housing.

Section AA.28

TO REFIT THE DISTRIBUTOR DRIVE GEAR

Turn the engine until No. 4 piston is at T.D.C. on its compression stroke. When the valves on No. 1 cylinder are 'rocking' (i.e. exhaust just closing and inlet just opening) No. 4 piston is at the top of its compression stroke. If the engine is set so that the groove in the crankshaft pulley is in line with the pointer on the timing chain cover, or the 'dimples' in the crankshaft and camshaft gears are in line, the piston is exactly at T.D.C.

Screw one of the tappet cover bolts into the threaded end of the distributor drive gear and, holding the drive gear with the slot vertical and the small offset towards the front of the engine, enter the gear. As the gear engages with the camshaft the slot will turn in an anti-clockwise direction until it is approximately in the 11 o'clock position.

Remove the bolt from the gear and insert the distributor housing and secure it with the special bolt and washer. Ensure that the correct bolt is used and that the head does not protrude above the face of the housing.

Refit the distributor, referring to Section CC.7 if the clamp plate has been released.

Section AA.29

REMOVAL AND REPLACEMENT OF FLYWHEEL

(Engine Out of Car)

Remove the clutch by unscrewing the six bolts and spring washers securing it to the flywheel. Release the bolts a turn at a time to avoid distortion of the cover flange. Two dowels locate the clutch cover on the flywheel. Note that on later models these dowels are stepped.

Unlock and remove the four bolts and lock plates which secure the flywheel to the crankshaft and remove the flywheel.

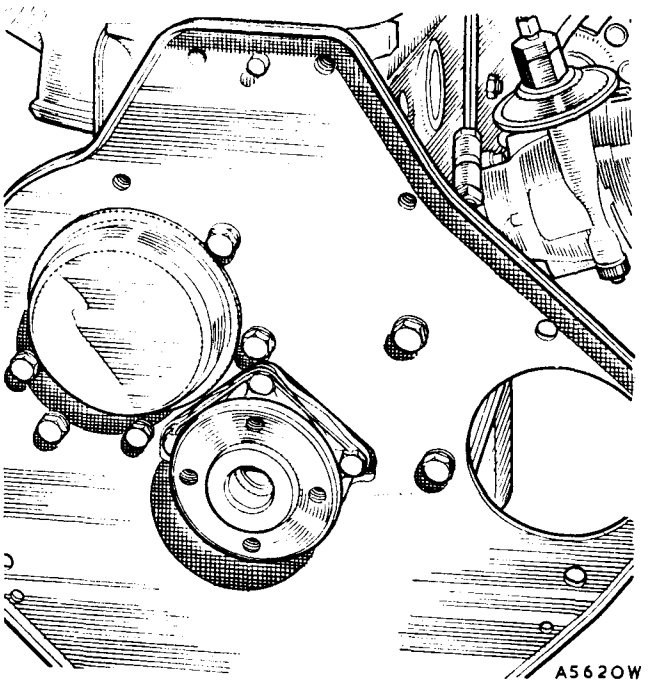

Fig. AA.22

The flywheel removed, exposing the mounting plate and its seven attachment bolts

When replacing the flywheel ensure that the 1/4 timing mark on the periphery of the flywheel is in line with and on the same side as the first and fourth throws of the crankshaft.

Section AA.30

REMOVAL AND REPLACEMENT OF OIL PUMP

Take out the engine (see Section AA.25) and remove the flywheel (see Section AA.29).

The rear engine mounting plate is attached by means of seven bolts and spring washers, which are shown in Fig. AA.22. Remove these bolts and washers and take off the mounting plate.

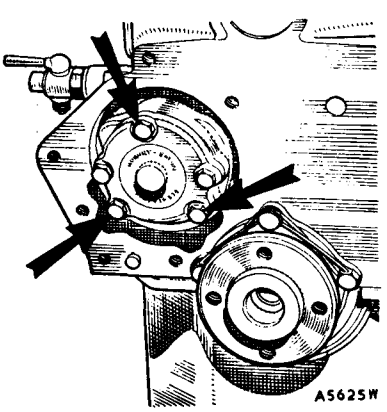

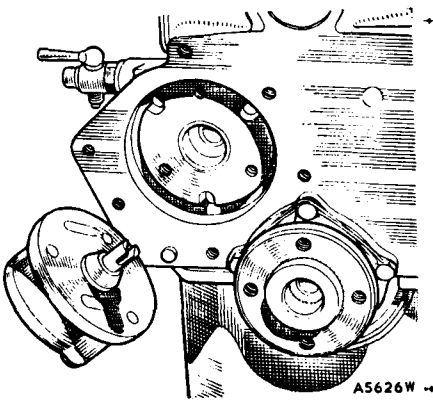

Fig. AA.23

The three bolts attaching the oil pump to the cylinder block are shown in the left-hand illustration. The right-hand illustration shows the pump withdrawn

THE MORRIS MINOR ENGINE (Series II)

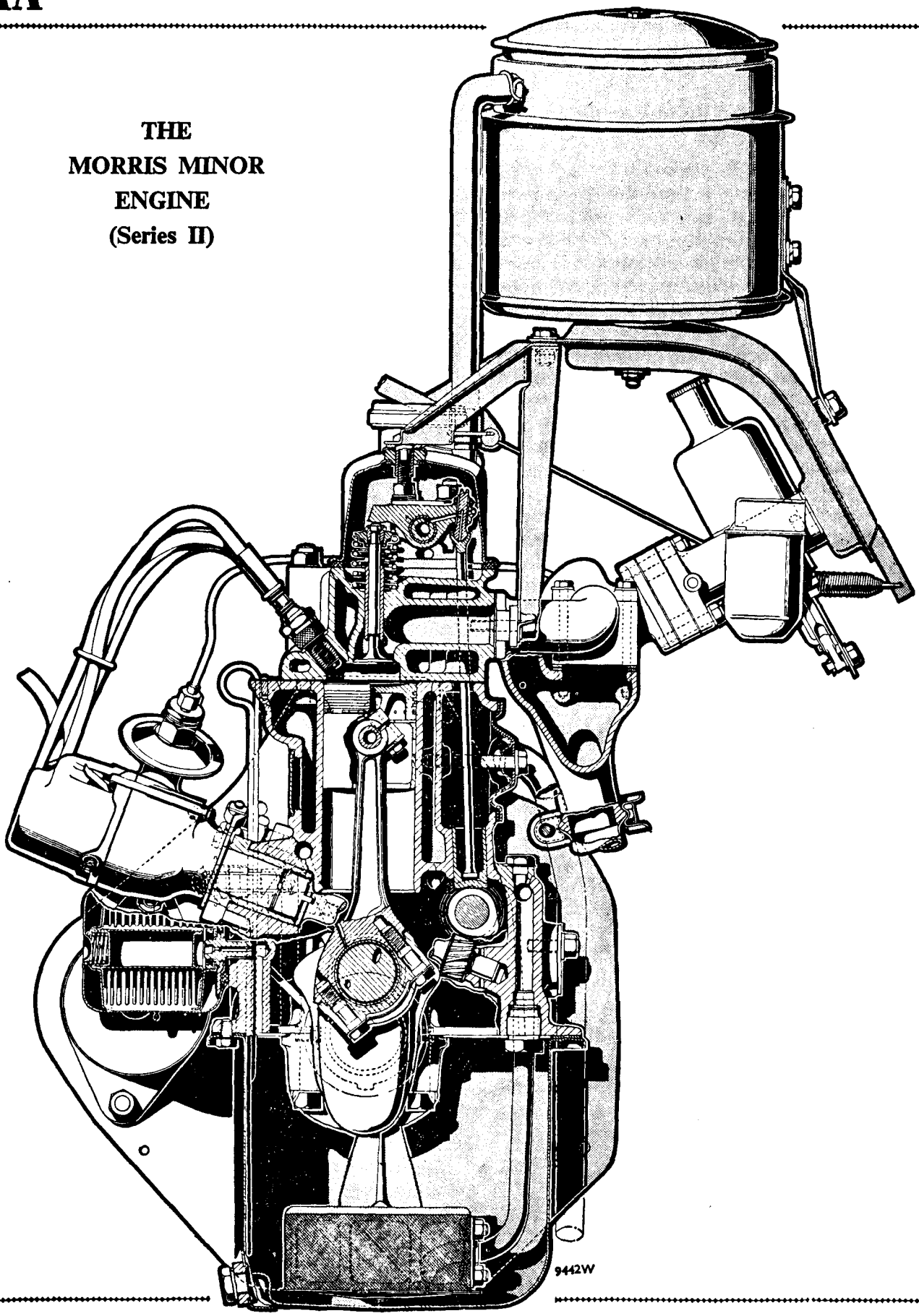

The oil pump is now exposed. Bend back the locking tabs from the three outer bolts and remove these bolts. The oil pump may now be withdrawn. It will be noticed that a gasket is fitted between the pump face and the cylinder block, and this should be renewed if it is damaged.

It will also be noticed that the pump shaft is slotted to engage the driving pin in the hollow end of the camshaft.

To replace the oil pump reverse the above process.

Section AA.31

DISMANTLING AND REASSEMBLING OIL PUMP

Remove the oil pump from the engine (see Section AA.30).

The oil pump cover is attached to the body of the pump by two bolts and spring washers, and when these bolts are removed the oil pump cover, the outer rotor, and the combined oil pump shaft and inner rotor may be extracted. The component parts are shown on page AA.10, items 70 to 77.

Reassembly is a reversal of the above procedure.

Section AA.32

REMOVAL AND REPLACEMENT OF CRANKSHAFT

(Engine Out of Car)

Remove the engine from the car (see Section AA.25). Take off the clutch and the flywheel (see Section AA.29), the timing cover (see Section AA.23), the timing wheels

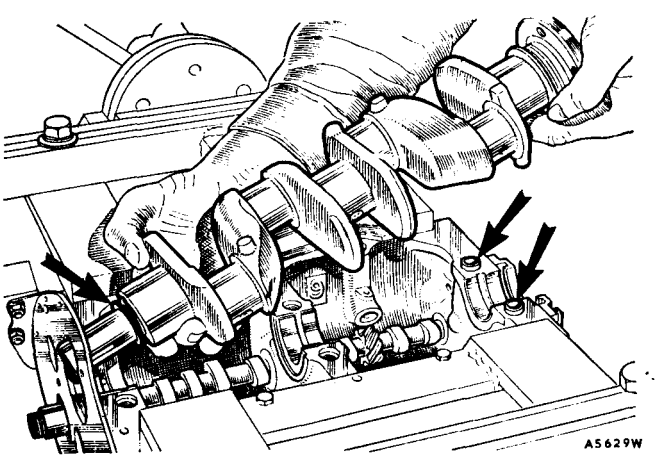

Fig. AA.24

The crankshaft partly withdrawn, showing the packing washers behind the crankshaft chain wheel and the two tubular dowels locating the rear main bearing cap

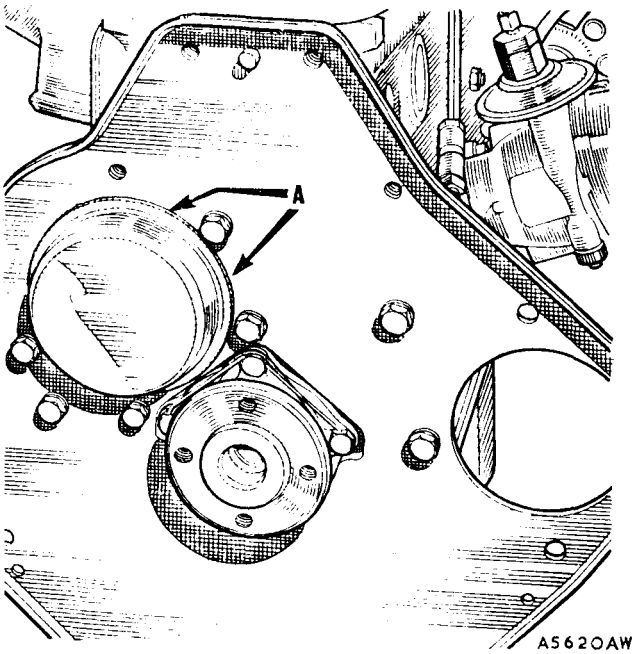

Fig. AA.25

The rear engine mounting plate and its pump protecting cover, indicating the point of oil leakage when the joint is defective

and chain (see Section AA.24), the sump and the oil pump pick-up (see Section AA.2), and the rear engine mounting plate (see Section AA.30).

Remove the big-end bearings and then take off the main bearing caps (see Section AA.5).

NOTE.—Mark each big-end, bearing cap, and bearing to ensure that they are reassembled to the correct journal, taking care, in the case of the bearings, that they are not damaged or distorted when marking. Punches should not be used for this purpose.

Lift the crankshaft out of the bearings.

Replacement of the crankshaft is a reversal of the above operations.

IMPORTANT.—Before replacing the crankshaft thoroughly clean out all oilways.

Note that each main bearing is stamped with a common number which is also stamped on the centre web of the crankcase near the main bearing.

Remember to fit the packing washer behind the crankshaft chain wheel (see Section AA.24).

Section AA.33

LEAKAGE OF OIL INTO CLUTCH HOUSING

Where leakage of oil into the clutch housing takes place it has been established that this is sometimes due to leakage between the oil pump protecting cover and

the engine mounting plate as a result of an imperfect joint between these two components. This joint should therefore be examined before disturbing the rear main bearing.

If the leak proves to be at this joint it must be rectified by removing the rear mounting plate and resoldering the joint between the pump cover and the mounting plate.

Section AA.34

OIL LEAKS FROM SUMP AND TO CLUTCH COMPARTMENT

In dealing with cases of engine oil leakage at the rear face of the sump or from the clutch housing drain pin an external visual examination should first be made to ascertain if possible at which of the two points mentioned the oil is appearing.

If leakage appears to be at the rear face of the sump only the sump should be withdrawn and all trace of old gasket and front and rear cork packings removed.

The sump top face at the corners of the semicircular seal housing should be checked for truth and any undue irregularities removed. The length of the front and rear cork packings is critical, since they must be long enough when overlapped by the ends of each side of the sump gasket to give compression at these four points when the sump is bolted up, but not so long that the cork is spread and trapped between the top face of the sump and the bottom face of the cylinder block.

If necessary, the new cork packings should be shortened so that when they are placed in position in their retainers on the sump they stand proud at each corner by approximately ⅛ in. (3·2 mm.). Grease the cork packings and make sure that they are pushed fully down in their retaining grooves. The two halves of the sump gasket may now be placed in position and the unit bolted up to the under side of the block. It is essential that the sump retaining bolts should be tightened evenly and diagonally to pull the sump squarely against the bottom face.

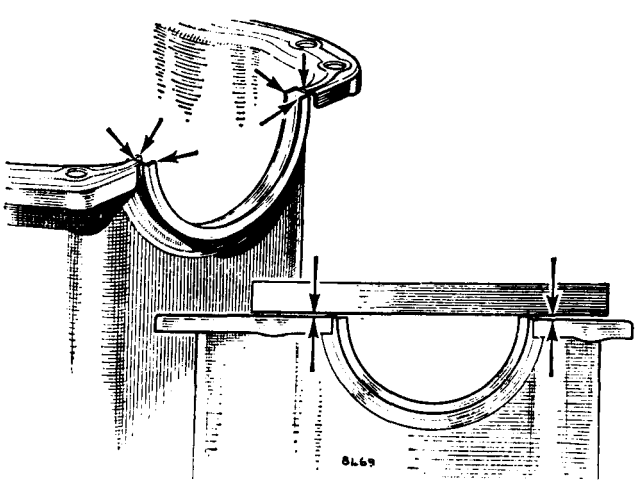

Fig. AA.26

Use a straight-edge to check that the seal housing does not stand above the sump face at the points indicated here

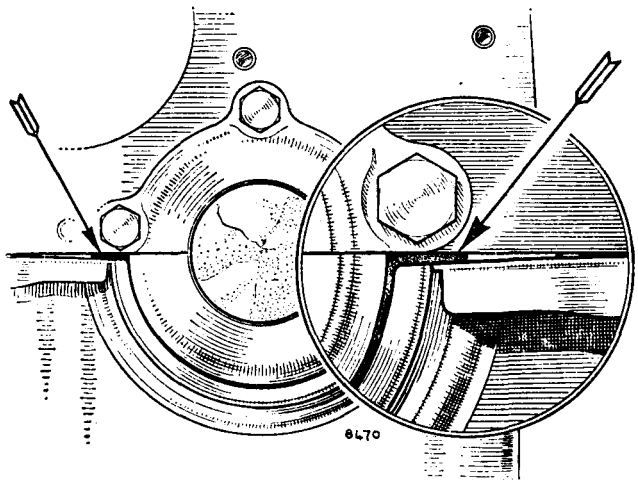

Fig. AA.27

If the rear cork packing is too long it may spread and prevent the sump seating correctly as here

If there is engine oil leakage from the clutch housing drain pin, to deal with this adequately the engine unit should be removed and the clutch and flywheel taken off together with the rear mounting plate and oil pump.

The sump also should be removed, followed by the main bearing caps. The connecting rod caps should also be extracted so that the crankshaft can be removed.

The following items must be checked and receive attention as necessary. The upper half of the housing for the crankshaft oil thrower is secured by three set screws to the rear face of the block and has a paper gasket interposed between it and the rear face. This gasket must be in perfect condition and the half-housing itself must be secured flush with the bottom face of the block both laterally and vertically. After the screws have been inserted to just more than finger tightness the housing may be finally tapped into its correct location and the screws then finally tightened. Check the position again for flush fitting.

Examine the crankshaft oil return thread for condition. Replace the crankshaft and ensure that there is a radial clearance of ·0015 to ·004 in. (·038 to ·101 mm.).

Replace the rear main bearing cap with which the lower half of the oil thrower housing is integral and check the joint between the two halves of the housing.

Radial clearance between the crankshaft oil thrower and the lower half of the housing may be checked by

applying blue to the thrower on the crankshaft and assembling the rear main bearing cap and rotating the crankshaft.

The gasket between the pump body and the rear face of the cylinder block must be in perfect condition, as must the joint between the oil pump cover and pump body and also the soldered cover joint on the gearbox mounting plate.

The face of the mounting plate adjacent to the block must also be true and the gasket interposed at this joint in perfect condition. Both these points are vitally important, since if there is any oil leakage from the pump the escaping oil is liable to leak past the narrow portion of the gasket either down the mounting plate or into the clutch housing.

It is, of course, also important to make sure that the pump cover-plate is properly soldered to the mounting plate as indicated in Section AA.33.

When all these points have been dealt with satisfactorily reassembly can take place, followed by reinstallation of the unit in the chassis.

Section AA.35

OIL LEAKAGE FROM CYLINDER HEAD SEAL

Should oil leak from the front end of the joint between the cylinder block and cylinder head, the cylinder head assembly must be removed as detailed in Section AA.10.

Thoroughly clean the mating faces of the cylinder head and cylinder block and fit an improved cylinder head joint seal (Part No. 2A 521) without using sealing compound. The gasket is marked 'TOP' and 'FRONT' to ensure correct replacement and has increased corrugation around the oil hole to improve sealing.

After replacing the cylinder head as detailed in Section AA.10 the cylinder head stud nuts should be securely tightened and the rocker clearance set while the engine is hot.

After approximately 250 miles (400 km.) the rocker cover should be removed and the cylinder head stud nuts tightened again to the recommended torque of 40 lb. ft. (5·5 kg. m.) and the rocker clearance should then be re-checked.

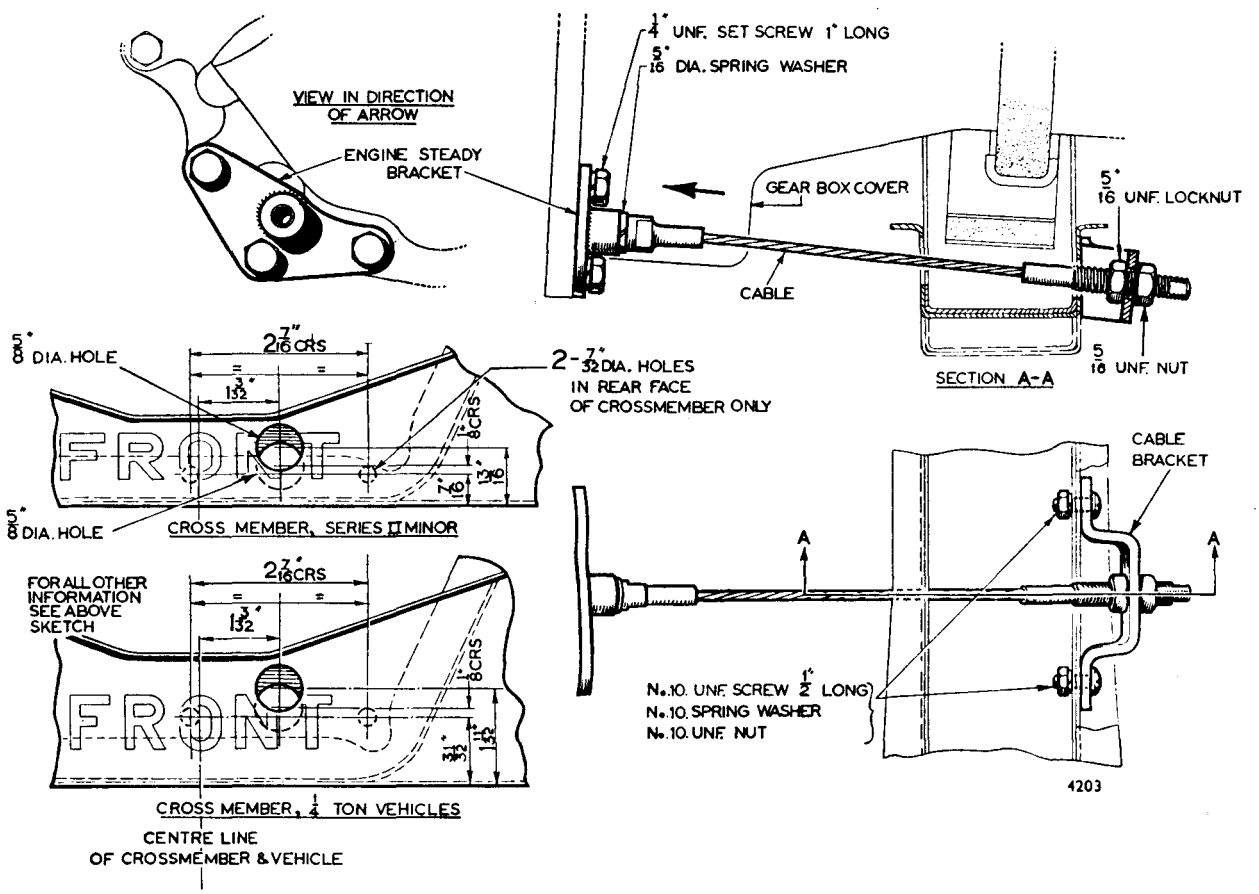

Fig. AA.28

Diagram of engine rear steady

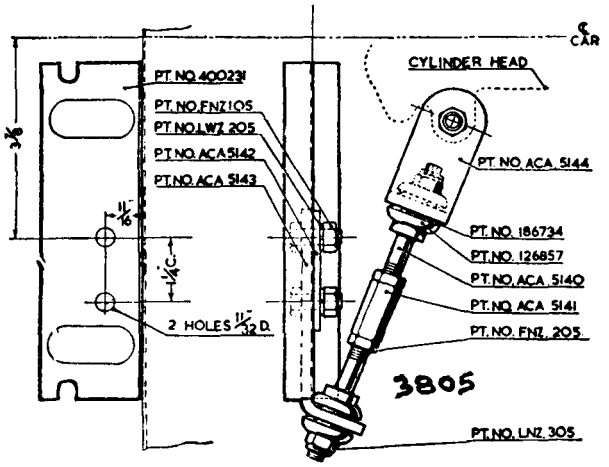

Fig. AA.29

The position in which the holes should be drilled in the right-hand battery box support, together with a plan of the assembled tie-rod in position

Section AA.36

ENGINE STEADY CABLE

On models later than Car No. 264013 an engine steady cable is fitted between a bracket on the left-hand side of the gearbox rear cover and the rear cross-member to provide longitudinal anchorage for the engine, and adjustment of the cable is by means of a $\frac{5}{16}$ in. UNF. nut and locknut.

To remove this cable the nut and locknut at the rear end should be removed and the cable screwed out of the bracket on the rear gearbox cover, using the flats machined on the front end of the cable. Reinstallation is a reversal of the above, and the cable should be tensioned so as just to prevent any forward movement of the power unit relative to the chassis. Care must be taken not to impose too great a tension or roughness will be felt with engine vibration. When tightening, the end of the cable must be held with a spanner engaging the flats at the rear end to prevent twisting and damage to the cable.

Section AA.37

ENGINE TIE-ROD

To deal with cases of clutch judder an engine tie-rod and bracket assembly, to be fitted between the cylinder head and dash panel, is obtainable under Part No. AJA 5054.

The engine anchor bracket is secured below the right-hand rear cylinder head stud nut after fitting the lengthened stud provided.

The body anchor bracket is secured to the right-hand battery box support by two $\frac{5}{16}$ in. bolts, with nuts and spring washers, after drilling two $\frac{11}{32}$ in. (8·75 mm.) holes in the support in the position indicated in Fig. AA.29. Fit the anchor bracket behind the support and the reinforcement plate in the front.

The sequence of assembling the tie-rods, cups, rubbers, and anchor plates is illustrated in Fig. AA.29. It is essential that the length of the tie-rod is adjusted so that it is free of tension or compression load when the nuts are tightened. Ensure that the tie-rod rubbers are not unduly compressed when tightening the self-locking retaining nuts.

Section AA.38

OIL CONSUMPTION

Commencing at Engine No. 121585, a tapered piston ring is fitted in the third groove of the pistons in place of the original plain ring, making the order of the rings, from the top of the piston, (1) plain, (2) taper, (3) taper, (4) scraper. This alteration is made to improve the oil consumption, and the new piston assemblies may be used to service the earlier type singly or in sets.

Commencing at the same engine number, a new valve guide shroud (Part No. 2A 544) is fitted. This later shroud is $\frac{21}{32}$ in. (16·7 mm.) deep and approximately $\frac{3}{32}$ in. (2·4 mm.) shorter than the type fitted to engines from No. 50792 to No. 121585. When valve guide shrouds are suspected of causing oil pumping and increasing the oil consumption of engines between the above serial numbers the latest shrouds should be fitted.

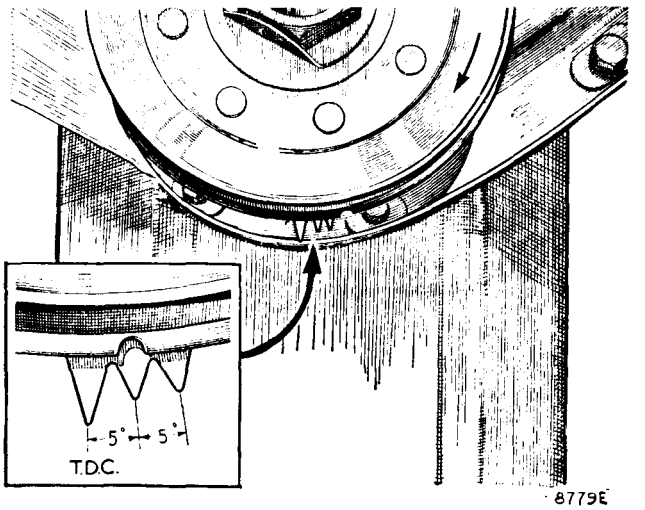

Fig. AA.30

The three-pointed timing indicator fitted to later models

Section AA.39

VALVE ROCKER MODIFICATION

A new valve rocker assembly with the screwed boss increased in depth from $\frac{7}{16}$ to $\frac{9}{16}$ in. (11·1 to 14·3 mm.) and a lengthened rocker adjusting screw with the over-all length increased from $1\frac{9}{32}$ in. to $1\frac{3}{8}$ in. (32·5 to 34·9 mm.) has been introduced at Engine No. 122704 to ensure that the valve rocker screw does not work loose.

The old and new rocker adjusting screws are interchangeable, but the later-type rocker with thickened boss must only be used in conjunction with the longer screw.

Section AA.40

MODIFIED TIMING MARKS

Commencing at Engine No. 145881 and on Engines 143904 to 144000 inclusive, a new timing indicator consisting of a bracket with three pointers is fitted to the timing case underneath the pulley. The longest pointer indicates T.D.C. and the other two pointers 5° and 10° advance respectively. The timing mark on the pulley is a notch on the rim as before. The correct timing is 2° advance.

Section AA.41

ACCELERATOR CABLE ADJUSTMENT

From Car No. 319429 a modified accelerator cable abutment bracket has been fitted to reduce tappet noise which on some earlier cars is transmitted by the accelerator cable to the inside of the car. Reference to Fig. AA.31 clearly shows the new run of the cable and the abutment bracket.

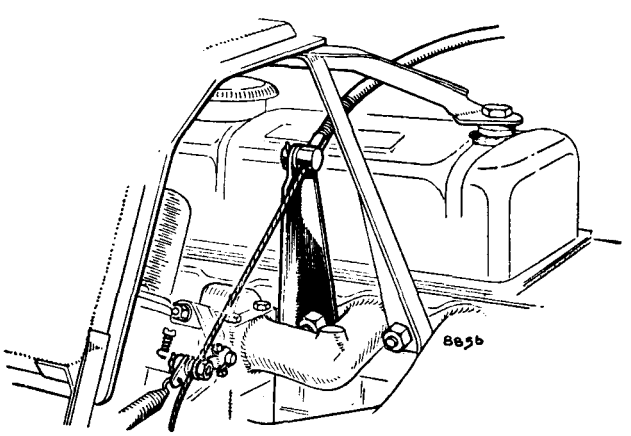

Fig. AA.31

Showing the run of the accelerator cable and new abutment bracket (Part No. ACA **5123**)

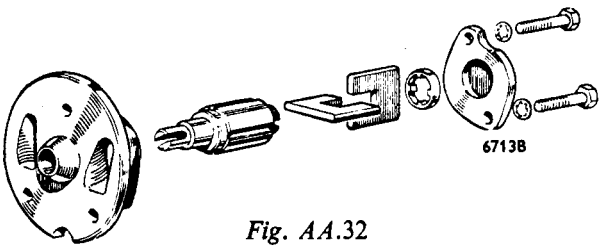

Fig. AA.32

Details of the rotary-vane-type oil pump which may be fitted on some engines

Section AA.42

ROTARY-VANE-TYPE OIL PUMP

From Engine No. 194195 a Burman rotary-vane-type oil pump may be fitted to some engines as an alternative to the concentric rotor type fitted earlier.

Instructions for removing this later-type pump from the engine remain the same as those detailed in Section AA.30.

To dismantle the oil pump remove the two bolts securing the cover to the pump body.

With the cover-plate removed the vane assembly may be extracted.

To remove the vanes from the rotor carefully prise off the rotor sleeve, which is a press fit on the rotor, and extract the vanes.

Reference to Fig. AA.32 will facilitate dismantling and reassembly of the pump.

Section AA.43

MODIFIED EXHAUST VALVES AND GUIDES

Shorter valve guides with a plain reamed bore and exhaust valves with smaller-diameter stems are fitted to the cylinder heads of later engines.

The new valves and guides are interchangeable with the old and the guides are now the same for inlet and exhaust.

When fitting new valve guides they must be driven in from the top of the cylinder head with the larger chamfer end uppermost. The valve guides should be driven into the combustion spaces until they are $\frac{19}{32}$ in. (15·1 mm.) above the machined surface of the valve spring seating.

Section AA.44

FITTING FLYWHEEL STARTER RINGS

To remove the old starter ring from the flywheel flange split the ring gear with a cold chisel, taking care not to damage the flywheel. Make certain that the bore of the

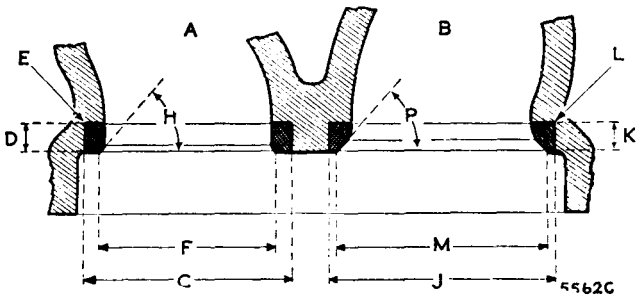

Fig. AA.33

Valve seat machining dimensions

Exhaust (A)	Inlet (B)
C. 1·124 to 1·125 in. (28·55 to 28·58 mm.).	J. 1·187 to 1·188 in. (30·16 to 30·17 mm.).
D. ·186 to ·188 in. (4·72 to 4·77 mm.).	K. ·186 to ·188 in. (4·72 to 4·77 mm.).
E. Maximum radius ·015 in. (·38 mm.).	L. Maximum radius ·015 in. (·38 mm.).
F. 1·0235 to 1·0435 in. (25·99 to 26·50 mm.).	M. 1·0855 to 1·1055 in. (27·58 to 28·07 mm.).
H. 45°.	P. 45°.

new ring and its mating surface on the flywheel are free from burrs and are perfectly clean.

To fit the new ring it must be heated to a temperature of 300 to 400° C. (572 to 752° F.), indicated by a light-blue surface colour. If this temperature is exceeded the temper of the teeth will be affected. The use of a thermostatically controlled furnace is recommended. Place the heated ring on the flywheel with the lead of the ring teeth facing the flywheel register. The expansion will allow the ring to be fitted without force by pressing or tapping it lightly until the ring is hard against its register.

This operation should be followed by natural cooling, when the 'shrink fit' will be permanently established and no further treatment required.

Section AA.45

FITTING VALVE SEAT INSERTS

Should the valve seatings become so badly worn or pitted that the normal workshop cutting and refacing tools cannot restore them to their original standard of efficiency, special valve seat inserts can be fitted.

The seatings in the cylinder head must be machined to the dimension given in Fig. AA.33. Each insert should have an interference fit of ·0025 to ·0045 in. (·063 to ·11 mm.) and must be pressed and not driven into the cylinder head.

After fitting, grind or machine the new seating to the dimensions given in Fig. AA.33. Normal valve grinding may be necessary to ensure efficient valve seating.

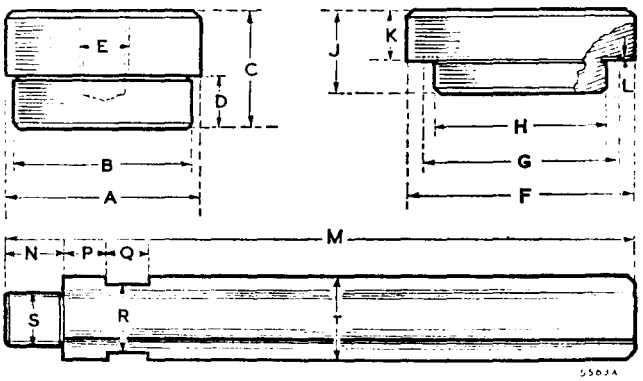

Fig. AA.34

Cylinder liner pilots should be made to the above dimensions from case-hardening steel and case-hardened. The pilot extension should be made from 55-ton hardening and tempering steel, hardened in oil and then tempered at 550° C. (1,020° F.)

Dimensions for 803-c.c. engines

Pressing-out pilot

A. $2\frac{3}{8}^{+\cdot005}_{-\cdot000}$ in. ($60\cdot33^{+\cdot127}_{-\cdot000}$ mm.).
B. $2\cdot270^{+\cdot000}_{-\cdot005}$ in. ($57\cdot75^{+\cdot000}_{-\cdot127}$ mm.).
C. $1\frac{3}{4}$ in. (44·45 mm.).
D. $\frac{3}{4}$ in. (19·05 mm.).
E. $\frac{3}{4}$ in. B.S.W. thread.

Pressing-in pilot

F. $2\frac{13}{16}$ in. (71·44 mm.).
G. $2\frac{7}{16}$ in. (61·91 mm.).
H. $2\cdot255^{+\cdot000}_{-\cdot005}$ in. ($57\cdot27^{+\cdot000}_{-\cdot127}$ mm.).
J. $1\frac{1}{4}$ in. (31·75 mm.).
K. $\frac{3}{4}$ in. (19·05 mm.).
L. ·015 in. (·38 mm.).

Pilot extension

M. $14\frac{1}{2}$ in. (36·83 cm.).
N. $\frac{7}{8}$ in. (22·22 mm.).
P. $\frac{5}{8}$ in. (15·87 mm.).
Q. $\frac{5}{8}$ in. (15·87 mm.).
R. 1 in. (25·4 mm.) flats.
S. $\frac{3}{4}$ in. B.S.W. thread.
T. $1\frac{1}{4}$ in. (31·75 mm.).

Section AA.46

FITTING CYLINDER LINERS

Should the condition of the cylinder bores be such that they cannot be cleaned up to accept standard oversize pistons, dry cylinder liners can be fitted. This operation may be carried out by the use of specialized proprietary equipment or with a power press using pilot adaptors to the dimensions shown in Fig. AA.34. The press must be capable of 3 tons (3048 kg.) pressure to fit new liners and 5 to 8 tons (5080 to 8128 kg.) to remove old liners.

Remove the engine from the vehicle as detailed in Section AA.25. Dismantle the engine and remove the

cylinder head studs. If liners have not previously been fitted the bores must be machined and honed to the dimensions given in the table below.

To remove worn liners

Place the cylinder block face downwards on suitable wooden supports on the bed of the press, making sure that there is sufficient space between the block and the bed of the press to allow the worn liner to pass down. Insert the pilot in the bottom of the liner and carefully press the liner from the bore.

To press in new liners

Thoroughly clean the inside of the bores and the outside of the liners. Stand the cylinder block upright on the bed of the press, insert the pilot guide in the top of the liner, and position the liner with its chamfered end in the top of the bore. Make certain that the liner is square with the top of the block and that the ram of the press is over the centre of the pilot. Press the liner fully into the bore.

Each liner must be machined to the dimensions given in the table below after pressing into position.

Engine type	*Liner Part No.*	*Machine bores of cylinder block to this dimension before fitting liner*	*Outside diameter of liner*	*Interference fit of liner in cylinder block bore*	*Machine liner bore to this dimension after fitting*
'A' (803 c.c.)	2A 518	2·406 to 2·4065 in. (61·11 to 61·125 mm.)	2·4085 to 2·40925 in. (61·176 to 61·194 mm.)	·002 to ·00325 in. (·05 to ·08 mm.)	2·2795 to 2·281 in. (57·899 to 57·937 mm.)

THE MORRIS MINOR 1000 FULL-FLOW OIL FILTER COMPONENTS

No.	*Description*
1.	Filter—oil.
2.	Element.
3.	Joint washer—filter to filter head.
4.	Joint—filter to cylinder block.
5.	Screw—filter to cylinder block.
6.	Spring washer—screw.
7.	Oil pipe complete.
8.	Screw—banjo union.
9.	Washer—copper.
10.	Connector.

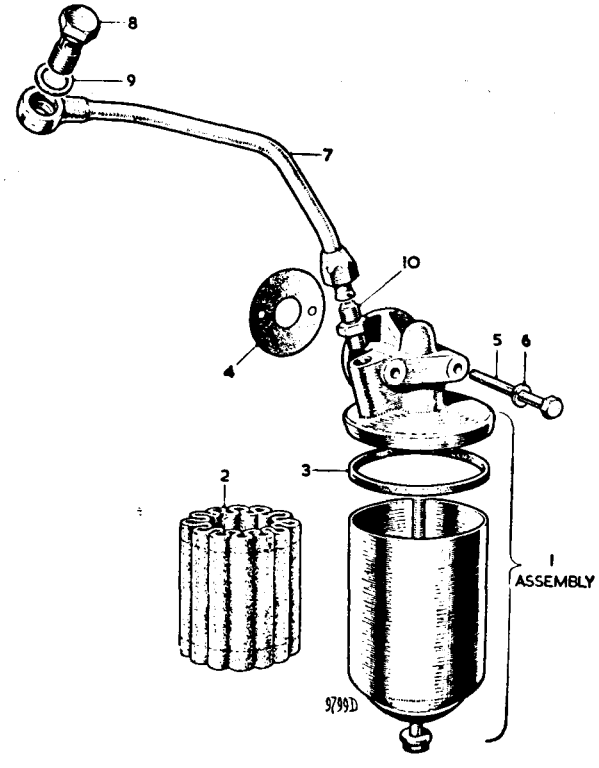

GENERAL DESCRIPTION

The Morris Minor 1000 overhead-valve engine is of the same construction as the engine fitted to the Morris Minor (Series II), with the exception of the following.

The split-skirt pistons are of aluminium alloy with an alumilited finish. The connecting rods have steel-backed, lead-bronze, lead-indium-plated surface, or steel-backed, copper-lead, lead-tin-plated surface, renewable big-end bearings.

The centrifugal water pump is of a different construction, and the first and second and third and fourth cylinders do not have a water jacket between them.

The carburetter is of a similar construction but has a larger throttle opening, necessitating a larger mounting flange on the induction manifold. An oil bath air cleaner is fitted to all models.

The illustrations shown on pages AA.6 and AA.10 are correct for the Morris Minor 1000, with the exception of the water pump (page AA.6) and the oil filter and oil sump gauze strainer (page AA.10).

LUBRICATION SYSTEM

The lubrication system of the Minor 1000 engine is similar to that of the Series II engine, but the oil is delivered to a **full-flow oil filter** from the sump gauze strainer and then to the gallery on the right-hand side of the crankcase.

Situated at the rear end of the main oil gallery is the oil pressure switch which operates the oil pressure warning light located in the instrument panel.

Section AAA.1

REMOVAL AND REPLACEMENT OF THE CARBURETTER

Before removing the carburetter it is necessary to remove the air cleaner.

Disconnect the breather hose by removing the clip which attaches it to the breather pipe on the rocker cover. Slacken the throttle cable attachment nut on the carburetter and unthread the cable from the air cleaner bracket. Disconnect the throttle return spring. Take out the two bolts securing the air cleaner pipe to the carburetter flange and lift off the air cleaner and pipe as an assembly, withdrawing the support spigot from its rubber mounting on the engine bracket.

To remove the carburetter disconnect the suction advance pipe union from the carburetter. Disconnect the petrol flexible hose at the pump end. Slacken the choke cable attachment nut on the jet lever and loosen the outer casing attachment screw on the jet link. Remove the choke cable. Take out the nuts and washers securing the carburetter and distance piece to the inlet manifold and lift off the carburetter.

Replacement of the carburetter, followed by replacement of the air cleaner, is a reversal of the above procedure. It should be noted that the distance piece which fits between the carburetter flange and the flange on the induction manifold has a gasket fitted on either side of it. If either of these gaskets is damaged, the faces of the distance piece and the carburetter flange must be cleaned so that no trace of the old gasket remains, and a new gasket must be fitted.

Section AAA.2

REMOVAL AND REPLACEMENT OF THE ENGINE OR POWER UNIT

Disconnect the battery by removing the lead from the positive terminal and disconnect the lead from the oil pressure switch.

Remove the carburetter and air cleaner as detailed in Section AAA.1, and proceed as detailed in Section AA.25 or Section AA.26, omitting the paragraphs referring to carburetter, air cleaner, and oil gauge pipe removal.

Section AAA.3

REMOVAL AND REPLACEMENT OF THE OIL FILTER ASSEMBLY

Remove the banjo union bolt from the oil pipe, disconnect the oil pipe union from the filter connector, and remove the oil pipe. Detach the filter bowl.

Remove the two nuts and spring washers securing the filter assembly to the cylinder block and remove the assembly.

If the gasket is damaged as the filter assembly is withdrawn from the cylinder block ensure that all traces of it are removed before a new gasket is fitted and the assembly replaced by a reversal of the above procedure.

Section AAA.4

REFITTING THE DISTRIBUTOR DRIVE GEAR

Turn the engine until No. 1 piston is at T.D.C. on its compression stroke. When the valves on No. 4 cylinder are 'rocking' (i.e. exhaust just closing and inlet just opening) No. 1 piston is at the top of its compression

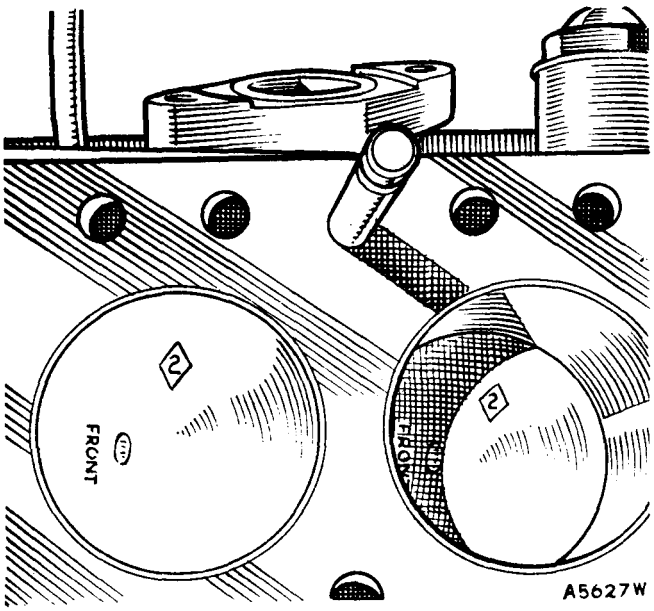

Fig. AAA.1

The pistons are marked on their crowns with a figure enclosed in a diamond to indicate their size, which should correspond with the similar size stamped on the cylinder block adjacent to the bore. The piston crowns are also stamped 'FRONT' to indicate which way they should be fitted, and 'oversize' pistons have their oversize dimension indicated by figures in a small ellipse

stroke. If the engine is set so that the groove in the crankshaft pulley is in line with the pointer on the timing chain cover, or the dimples in the crankshaft and camshaft gears are in line, the piston is exactly at T.D.C.

Screw one of the tappet cover bolts into the threaded end of the distributor drive gear and, holding the drive gear with the slot just below the horizontal and the large offset uppermost, enter the gear. As the gear engages with the camshaft the slot will turn in an anti-clockwise direction until it is approximately in the one o'clock position.

Remove the bolt from the gear and insert the distributor housing and secure it with the special bolt and washer. Ensure that the correct bolt is used and that the head does not protrude above the face of the housing.

Refit the distributor, referring to Section CC.7 if the clamp plate has been released.

Section AAA.5

PISTON SIZES AND CYLINDER BORES

In production, pistons are fitted by selective assembly, and to facilitate this the pistons are stamped with identification figures on their crowns.

A piston stamped with a figure 2 enclosed in a diamond is for a bore bearing a similar stamp.

In addition to the standard pistons there is a range of four oversize pistons available for service purposes. Oversize pistons are marked with the actual oversize dimensions enclosed in an ellipse. A piston stamped ·020 is suitable only for a bore ·020 in. (·508 mm.) larger than the standard bore and, similarly, pistons with other markings are suitable only for the oversize bore indicated.

The piston markings indicate the actual bore size to which they must be fitted, the requisite running clearance being allowed for in the machining.

After reboring an engine, or whenever fitting pistons differing in size from those removed during dismantling, ensure that the size of the piston fitted is stamped clearly on the top of the cylinder block alongside the appropriate cylinder bore (see Fig. AAA.1).

Pistons are supplied in the sizes indicated in the following table:

Piston marking	*Suitable bore size*	*Metric equivalent*
STANDARD	2·4778 to 2·4781 in.	62·935 to 62·940 mm.
OVERSIZE		
+·010 in. (·254 mm.)	2·4878 to 2·4881 in.	63·189 to 63·194 mm.
+·020 in. (·508 mm.)	2·4978 to 2·4981 in.	63·443 to 63·448 mm.
+·030 in. (·762 mm.)	2·5078 to 2·5081 in.	63·697 to 63·702 mm.
+·040 in. (1·016 mm.)	2·5178 to 2·5181 in.	63·951 to 63·956 mm.

Section AAA.6

MODIFIED PISTON ASSEMBLIES AND GUDGEON PINS

Commencing at Engine Nos. 9M–H117440 and 9M–L127575, new piston assemblies (Part No. 8G 688) with modified gudgeon pins (Part No. 2A 837) are fitted.

The gudgeon pins have a reduced internal diameter, and are therefore heavier, and can only be fitted in complete sets of four (i.e. complete sets of pistons and gudgeon pins, or a complete set of gudgeon pins).

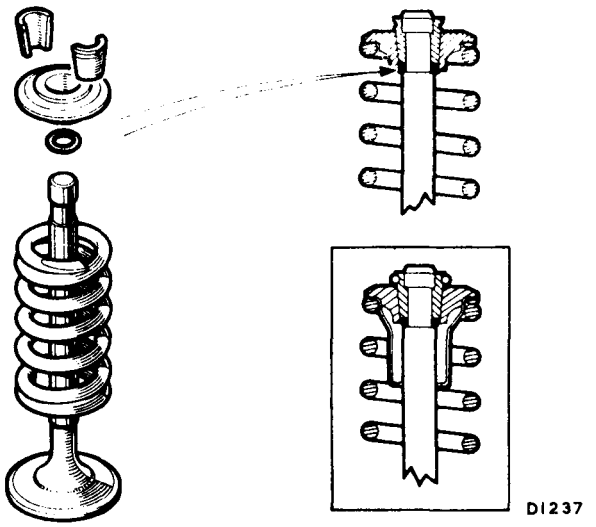

Fig. AAA 2

The valve assembly showing the position of the packing ring and (inset) the earlier assembly with valve shroud and cotter circlip

Section AAA.7

VALVES

Removal

Compress the valve spring, using Service tool 18G 45, and remove the two valve cotters. Release the valve spring and remove the compressor, valve spring cup and spring.

Remove the valve packing ring from the cotter groove and withdraw the valve from its guide.

Replacement

Place each valve into its guide and fit the springs and cups. Compress the valve spring and push a new packing ring, which has been soaked in clean engine oil for a short time, over the tip of the valve stem down to the bottom of the cotter groove (see Fig. AAA.2). Refit the two cotters and remove the compressor.

Valve shrouds were fitted up to Engine Nos. 10MA-H181473 and 10MA-L183700 and valve cotter circlips were fitted up to Engine Nos. 10ME-H2807 and 10ME-L1779.

Engines prior to Engine Nos. APJM-H190945 and APJM-L179249 had square section oil seals and if circular packing rings are to be fitted it will be necessary to fit also new valves and valve spring cups.

NOTE.—When fitting new parts it is not necessary to refit the valve shroud or cotter circlip.

Section AAA.8

MODIFIED CYLINDER HEAD GASKET

From Engine No. 9M-U-H235983 to 236000 and then 236081 onwards and 9M-U-L233057 to 233100 and then 235547 onwards a modified cylinder head gasket (Part No. 2A 971) having ferrules around the water holes is fitted. The new gasket is interchangeable with that previously used and is introduced to improve water sealing.

Section AAA.9

MODIFIED OIL PUMP

On later engines the Hobourn-Eaton alternative oil pump (Part No. 2A 341) is replaced by a Hobourn-Eaton pump of modified construction (Part No. 2A 692).

The cover and body of the new pump are now dowelled together, being located in the correct position in relation to each other by a $\frac{3}{16}$ in. countersunk screw. The assembly is held securely together by the three cylinder block attachment bolts. The pump cover now embraces the outer rotor and the combined oil pump shaft and inner shaft.

The new oil pump can be identified by the fact that the manufacturer's name and the patent number are cast on the outer flange of the cover instead of appearing around the centre of the cover. It may be interchanged as a unit with the oil pump originally used

To dismantle and assemble

When the pump has been removed from the engine (see Section AA.30) the $\frac{3}{16}$ in. countersunk screw can be removed from the engine side of the pump. It will now be possible to pull the body and cover of the pump apart, exposing the inner and outer rotors, which may be removed.

Reassembly is a reversal of the above procedure.

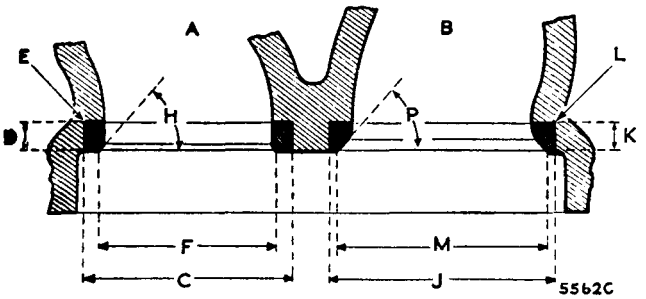

Fig. AAA.3

Valve seat machining dimensions

9M engines

Exhaust (A)	Inlet (B)
C. 1·124 to 1·125 in. (28·55 to 28·58 mm.).	J. 1·187 to 1·188 in. (30·16 to 30·17 mm.).
D. ·186 to ·188 in. (4·72 to 4·77 mm.).	K. ·186 to ·188 in. (4·72 to 4·77 mm.).
E. Maximum radius ·015 in. (·38 mm.).	L. Maximum radius ·015 in. (·38 mm.).
F. 1·0235 to 1·0435 in. (25·99 to 26·50 mm.).	M. 1·0855 to 1·1055 in. (27·58 to 28·07 mm.).
H. 45°.	P. 45°.

10MA engines

Exhaust (A)	Inlet (B)
C. 1·124 to 1·125 in. (28·55 to 28·58 mm.).	J. 1·3075 to 1·3085 in. (33·21 to 33·24 mm.).
D. ·186 to ·188 in. (4·72 to 4·77 mm.).	K. ·186 to ·188 in. (4·72 to 4·77 mm.).
E. Maximum radius ·015 in. (·38 mm.).	L. Maximum radius ·015 in. (·38 mm.).
F. 1·0235 to 1·0435 in. (25·99 to 26·50 mm.).	M. 1·1435 to 1·1635 in. (29·045 to 29·553 mm.).
H. 45°.	P. 45°.

Section AAA.10

FITTING FLYWHEEL STARTER RINGS

To remove the old starter ring from the flywheel flange split the ring gear with a cold chisel, taking care not to damage the flywheel. Make certain that the bore of the new ring and its mating surface on the flywheel are free from burrs and are perfectly clean.

To fit the new ring it must be heated to a temperature of 300 to 400° C. (572 to 752° F.), indicated by a light-blue surface colour. If this temperature is exceeded the temper of the teeth will be affected. The use of a thermostatically controlled furnace is recommended. Place the heated ring on the flywheel with the lead of the ring teeth towards the flywheel register. The expansion will allow the ring to be fitted without force by pressing or tapping it lightly until the ring is hard against its register.

This operation should be followed by natural cooling, when the 'shrink fit' will be permanently established and no further treatment required.

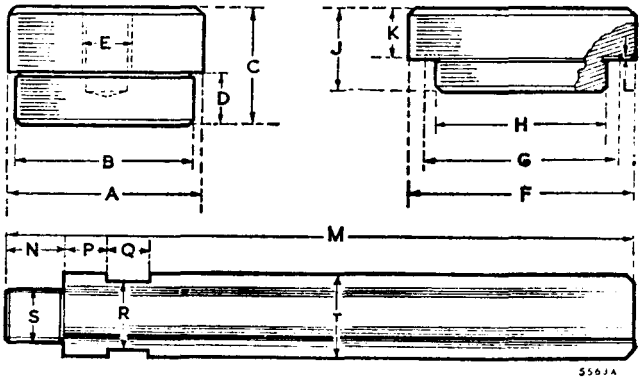

Fig. AAA.4

Cylinder liner pilots should be made to the above dimensions from case-hardening steel and case-hardened. The pilot extension should be made from 55-ton hardening and tempering steel, hardened in oil and then tempered at 550° C. (1,020° F.)

Dimensions for 9M engines

Pressing-out pilot

A. $2\frac{11}{16}{}^{+\cdot005}_{-\cdot000}$ in. (65·48$^{+\cdot127}_{-\cdot000}$ mm.).
B. 2·465$^{+\cdot000}_{-\cdot005}$ in. (62·61$^{+\cdot000}_{-\cdot127}$ mm.).
C. 1¾ in. (44·45 mm.).
D. ¾ in. (19·05 mm.).
E. ¼ in. B.S.W. thread.

Pressing-in pilot

F. 3 in. (76·20 mm.).
G. 2⅝ in. (66·68 mm.).
H. 2·455$^{+\cdot000}_{-\cdot005}$ in. (62·35$^{+\cdot000}_{-\cdot127}$ mm.).
J. 1¼ in. (31·75 mm.).
K. ¾ in. (19·05 mm.).
L. ·015 in. (·38 mm.).

Pilot extension

M. 14½ in. (36·83 cm.).
N. ⅞ in. (22·22 mm.).
P. ⅝ in. (15·87 mm.).
Q. ⅝ in. (15·87 mm.).
R. 1 in. (25·4 mm.) flats.
S. ¼ in. B.S.W. thread.
T. 1¼ in. (31·75 mm.).

Dimensions for 10MA engines

Pressing-out pilot

A. $2\frac{5}{8}{}^{+\cdot005}_{-\cdot000}$ in. (66·68$^{+\cdot127}_{-\cdot000}$ mm.).
B. 2·537$^{+\cdot000}_{-\cdot005}$ in. (64·44$^{+\cdot000}_{-\cdot127}$ mm.).
C. 1¾ in. (44·45 mm.).
D. ¾ in. (19·05 mm.).
E. ¼ in. B.S.W. thread.

Pressing-in pilot

F. 3 $\frac{1}{16}$ in. (77·79 mm.).
G. 2$\frac{11}{16}$ in. (68·26 mm.).
H. 2·515$^{+\cdot000}_{-\cdot005}$ in. (63·88$^{+\cdot000}_{-\cdot127}$ mm.).
J. 1¼ in. (31·75 mm.).
K. ¾ in. (19·05 mm.).
L. ·015 in. (·38 mm.).

Pilot extension

M. 10½ in. (26·67 cm.).
N. ⅞ in. (22·22 mm.).
P. ⅝ in. (15·87 mm.).
Q. ⅝ in. (15·87 mm.).
R. 1 in. (25·4 mm.) flats.
S. ¼ in. B.S.W. thread.
T. 1¼ in. (31·75 mm.).

Section AAA.11

FITTING VALVE SEAT INSERTS

Should the valve seatings become so badly worn or pitted that the normal workshop cutting and refacing tools cannot restore them to their original standard of efficiency, special valve seat inserts can be fitted.

The seatings in the cylinder head must be machined to the dimension given in Fig. AAA.3. Each insert should have an interference fit of ·0025 to ·0045 in. (·063 to ·11 mm.) and must be pressed and not driven into the cylinder head.

After fitting grind or machine the new seating to the dimensions given in Fig. AAA.3. Normal valve grinding may be necessary to ensure efficient valve seating.

Section AAA.12

FITTING CYLINDER LINERS

Should the condition of the cylinder bores be such that they cannot be cleaned up to accept standard oversize pistons, dry cylinder liners can be fitted. This operation may be carried out by the use of specialized proprietary equipment or with a power press using pilot adaptors to the dimensions shown in Fig. AAA.4. The press must be capable of 3 tons (3048 kg.) pressure to fit new liners and 5 to 8 tons (5080 to 8128 kg.) to remove old liners.

Remove the engine from the vehicle as detailed in Section AA.25. Dismantle the engine, and remove the cylinder head studs. If liners have not previously been fitted the bores must be machined and honed to the dimensions given in the table below.

To remove worn liners

Place the cylinder block face downwards on suitable wooden supports on the bed of the press, making sure that there is sufficient space between the block and the bed of the press to allow the worn liner to pass down. Insert the pilot in the bottom of the liner and carefully press the liner from the bore.

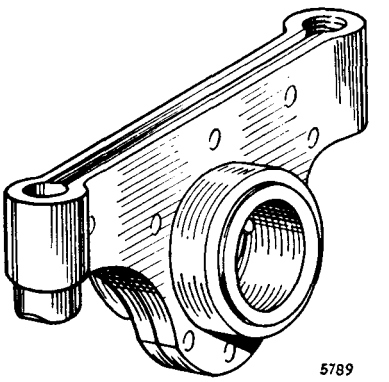

Fig. AAA.5

The pressed-steel type of valve rocker, which must not be rebushed

To press in new liners

Thoroughly clean the inside of the bores and the outside of the liners. Stand the cylinder block upright on the bed of the press, insert the pilot guide in the top of the liner, and position the liner with its chamfered end in the top of the bore. Make certain that the liner is square with the top of the block and that the ram of the press is over the centre of the pilot. Press the liner fully into the bore.

Each liner must be machined to the dimensions given in the table below after pressing into position.

Section AAA.13

PRESSED-STEEL VALVE ROCKERS

Valve rockers of pressed-steel construction (see Fig. AAA.5) have been introduced as alternatives to the forged type.

Rebushing pressed-steel valve rockers is not practicable and must not be undertaken. When bushes become worn new rocker assemblies must be fitted. It it becomes necessary to renew individual valve rockers, it is important to use those of the pattern already fitted. Pressed-steel and forged-type valve rockers are interchangeable only in sets of eight.

Engine type	*Liner Part No.*	*Machine bores of cylinder block to this dimension before fitting liner*	*Outside diameter of liner*	*Interference fit of liner in cylinder block bore*	*Machine liner bore to this dimension after fitting*
'A' (9M)	2A 784	2·6035 to 2·604 in. (66·128 to 66·14 mm.)	2·606 to 2·60675 in. (66·19 to 66·21 mm.)	·002 to ·00325 in. (·05 to ·08 mm.)	2·477 to 2·4785 in. (62·915 to 62·954 mm.)
'A' (10MA)	12G 164	2·64075 to 2·64125 in. (67·076 to 67·088 mm.)	2·64325 to 2·64400 in. (67·139 to 67·158 mm.)	·002 to ·00325 in. (·05 to ·08 mm.)	2·542 to 2·5435 in. (64·566 to 64·605 mm.)

This alternative type of valve rocker is fitted from the following engine numbers:

9M–U–H283721 onwards.

9M–U–L282038 to 282100 inclusive and then 282631 onwards.

Section AAA.14

REMOVAL AND REPLACEMENT OF THE INLET/EXHAUST MANIFOLD

The removal and replacement of the manifolding, detailed in Section AA.8, differs from Morris Minor 1000 cars, from Engine No. 9M–U–H425490, in that a one-piece inlet/exhaust manifold was introduced at this engine number.

Section AAA.15

CAMSHAFT BEARINGS (10MA Engines)

Should the camshaft bearing clearances be excessive new bearing liners must be fitted, and this will entail line-reamering after fitting.

Removing the liners

Worn liners can be removed and new liners pulled into the cylinder block with Service tool 18G 124 A together with adaptors 18G 124 K, 18G 124 B, and 18G 124 M.

Centre

Insert the pilot adaptor 18G 124 K into the camshaft liner front bore from the inside of the block and the adaptor 18G 124 B into the centre liner from the rear, small end first.

With the body of the tool positioned on the centre screw, pass the screw through the pilot adaptor and the adaptor in the centre liner.

Place the slotted washer on the flat at the rear of the centre screw and insert the tommy-bar into the screw behind the slotted washer.

Tighten up the wing nut to withdraw the liner.

Front and rear

Insert the small end of the adaptor 18G 124 K into the camshaft front liner from the inside of the cylinder block, thread the body of the tool onto the centre screw, and pass the screw through the adaptor from the front of the block. Place the slotted washer on the flat at the rear of the centre screw and insert the tommy-bar into the centre screw behind the slotted washer.

Tighten up the wing nut to withdraw the worn liner.

The rear liner is withdrawn by the same method, using the adaptor 18G 124 M and withdrawing the liner from the rear of the block.

Fitting new liners

Line up the oil holes in the liners and the cylinder block and make certain that they remain correctly positioned during the whole operation.

Front and rear

Place the new liner on the smallest diameter of the adaptor 18G 124 K and insert the adaptor into the camshaft front liner bore from the inside of the block, largest diameter first.

Thread the body of the tool onto the centre screw and pass the screw through the adaptor located in the front liner from the front of the block.

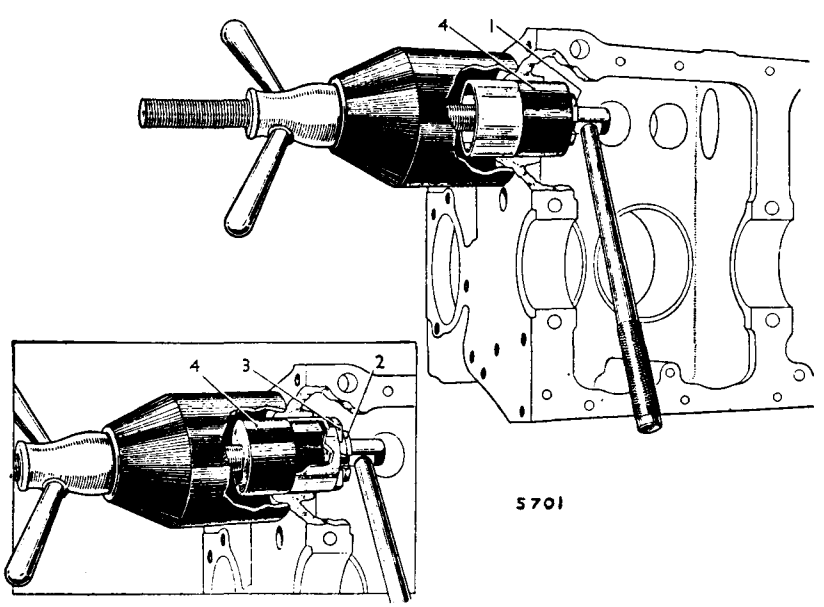

Fig. AAA.6

Removing a camshaft liner (10MA engines), using Service tool 18G 124 A and adaptor 18G 124 K. The inset shows the liner being replaced

1. 'C' washer.
2. 'C' washer.
3. 'D' washer.
4. Adaptor 18G 124 K.

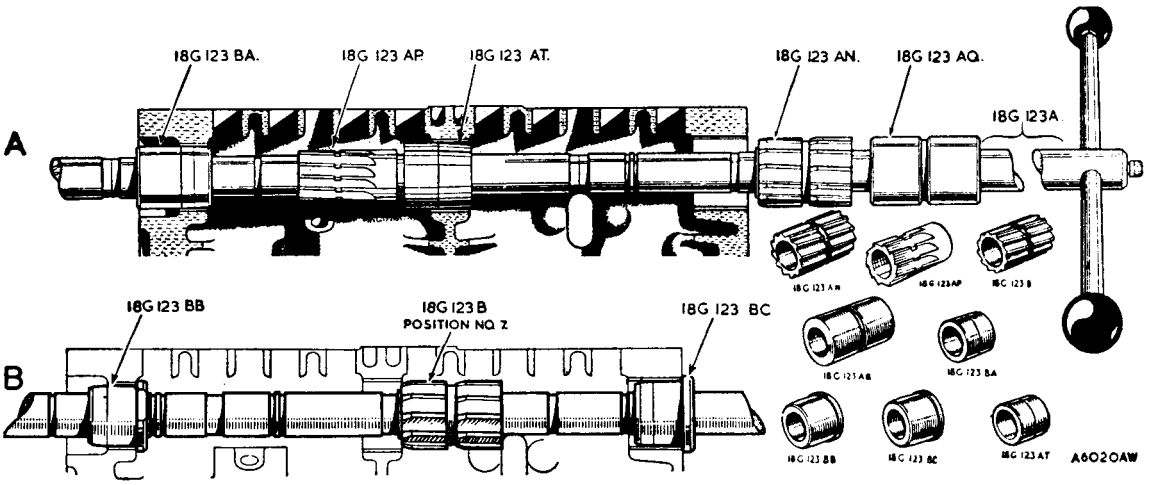

Fig. AAA.7

The camshaft liner reamer set up to line-ream (A) *the front and rear liners and* (B) *the centre liner* (10*MA engines*)

A. The cutters Part No. 18G 123 AP fitted to the No. 7 position and Part No. 18G 123 AN to the No. 10 position on the arbor.
B. The cutter Part No. 18G 123 B fitted to the No. 7 position on the arbor.

Position the larger of the two 'D' washers on the centre screw with the cut-away portion turned away from the butt joint of the liner: this joint **must** be covered by the washer.

Place the slotted washer on the flat at the rear of the centre screw and insert the tommy-bar into the screw behind the slotted washer.

Tighten the wing nut to pull the liner squarely into position.

The rear liner is replaced by the same method, using the adaptor 18G 124 M and pulling the liner into position from the rear of the block. The 'D' washer **is not** to be used when refitting a rear liner.

Centre

Insert the pilot adaptor 18G 124 K into the camshaft front liner from the inside of the block.

Place a new liner on the small end of the adaptor 18G 124 B and position the adaptor in the centre liner bore from the rear, largest diameter first.

With the body of the tool positioned on the centre screw insert the screw through the pilot adaptor and the adaptor in the centre liner bore.

Position the larger 'D' washer on the centre screw with the cut-away portion turned away from the butt joints of the liner; this joint must be covered by the washer.

Place the slotted washer and the tommy-bar in the centre screw and tighten up the wing nut to pull the liner into position.

Reaming the liners

It is essential that the cutter flutes are kept clear of swarf at all times during the cutting operation, preferably with air-blast equipment. The cutter should be withdrawn from the liner half-way through the cut and the swarf removed from the cutter and the liner.

Feed the reamer very slowly and keep the cutters dry.

The arbor should be lightly lubricated before assembling the cutters and pilots. All oilways should be thoroughly cleaned when the cutting operations have been completed.

Front and rear

Insert the taper pilots 18G 123 AT and 18G 123 BA into the centre and rear liners respectively.

Place the parallel pilot 18G 123 AQ in the arbor, followed by the cutter 18G 123 AN.

Thread the arbor through the front and centre liners, fit the cutter 18G 123 AP on the arbor, and thread the arbor through the taper pilot in the rear liner.

Secure the cutters and pilots in their respective positions; 18G 123 AN is located in No. 10 and 18G 123 AP is located in No. 7 on the arbor.

The cutter for the front liner will cut first with the arbor piloting in the centre and rear liners. The cutter for the rear liner will follow with the arbor piloting in the front and centre liners. Clear away all the swarf before the plain pilot is allowed to enter the front liner.

When the cut in the rear liner is finished free the cutters and withdraw the arbor.

Centre

Set up for the second part of the operation by inserting the pilots 18G 123 BC and 18G 123 BB in the front and rear liners.

Thread the arbor through the pilot in the front liner and place the cutter for the centre liner on the arbor. Thread the arbor through the centre liner and the pilot located in

the rear liner. Secure the cutter and pilots in position; 18G 123 B is located in No. 7 position on the arbor.

Ream the centre liner, release the cutter, and withdraw the arbor.

Section AAA.16

PISTONS AND CONNECTING RODS (10MA, 10ME, 10V Engines)

Should the piston or connecting rod suffer damage or the small-end bush or gudgeon pin require renewal, the piston/gudgeon pin and connecting rod/small-end bush can only be obtained as assemblies. Therefore, under no circumstances should the small-end bush or gudgeon pin be renewed separately.

Dismantling

The gudgeon pins are fully floating; remove the two circlips locating each pin and press the pins out. It is essential that the piston assemblies should be replaced in their own bores and fitted the same way round; they should be marked to facilitate this.

Reassembling

Assemble the pistons to the connecting rods with the gudgeon pin, which should be a hand push fit at a room temperature of 20° C. (68° F.). Secure each pin in its piston with two circlips, ensuring that they fit well into their grooves.

Section AAA.17

PISTON SIZES AND CYLINDER BORES (10MA, 10ME, 10V Engines)

In production, piston and connecting rod assemblies are fitted by selective assembly.

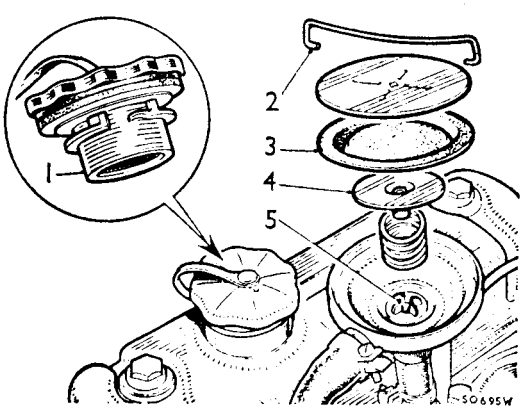

Fig. AAA.8

The breather control valve and oil filler cap with filter

1. Combined air filter/oil filler cap.
2. Spring clip.
3. Diaphragm.
4. Metering needle.
5. Cruciform guides.

In addition to the standard piston and connecting rod assemblies there is a range of two oversize piston and connecting rod assemblies available for Service purposes.

Piston and connecting rod assemblies are supplied in the sizes indicated in the following table:

Piston marking	*Suitable bore size*	*Metric equivalent*
STANDARD	2·5424 to 2·5447 in.	64·576 to 64·635 mm.
OVERSIZE		
+·010 in. (·254 mm.)	2·5524 to 2·5547 in.	64·830 to 64·889 mm.
+·020 in. (·508 mm.)	2·5624 to 2·5647 in.	65·084 to 65·143 mm.

Section AAA.18

TIMING COVER (Modified Timing Cover and Oil Thrower)

A modified timing cover and oil thrower is fitted to later engines and must be used together if required for earlier engines.

Note the following when replacing or refitting:

(1) The oil thrower must be fitted with the face marked 'F' away from the engine.
(2) Fit the oil seal from inside the cover, with Service tool 18G 134 and adaptor 18G 134 BD.
(3) When refitting the cover ensure that it is centralized on the crankshaft, using Service tool 18G 1044.
(4) Lightly lubricate the oil seal and refit the crankshaft pulley.

Section AAA.19

CRANKCASE BREATHING (10ME Engines)

Closed-circuit breathing

Fresh air enters the engine through two holes and a filter in the filler cap on the rocker cover. The air then passes to the crankcase via the push-rod drillings.

The crankcase fumes leave the engine through a breather outlet pipe on the front engine side cover. Oil droplets and mist are trapped in an oil separator before the fumes pass through a breather control valve and to the intake manifold, thus providing closed-circuit crankcase breathing.

Servicing

Oil filler cap filter

Detach the filler cap from the engine rocker cover and fit a new filler cap assembly.

Breather control valve

Remove the spring clip and dismantle the valve. Clean all metal parts with a solvent (trichlorethylene, fuel, etc.). If deposits are difficult to remove, immerse in boiling water before applying the solvent. **Do not use an abrasive.**

Clean the diaphragm with detergent or methylated spirits.

Replace components showing signs of wear or damage.

Reassemble the valve, making sure the metering needle is in the cruciform guides and the diaphragm is seated correctly.

Testing

Run the engine at idling speed and normal operating temperature and remove the oil filler cap. If the valve is functioning correctly the engine speed will increase by approximately 200 r.p.m.; this change can be detected by ear. If there is no change in engine speed the valve must be renewed.

SECTION AAA

ENGINE (APJM, 9M, 10MA, 10ME AND 10V)
OF THE MORRIS MINOR 1000

SECTION B

THE FUEL SYSTEM

OF THE MORRIS MINOR (Series MM)

Section B.1

REMOVAL AND REPLACEMENT OF THE PETROL TANK

Drain all petrol from the tank by removing the ½ in. hexagon-headed drain plug. Replace the plug when the tank is empty.

Disconnect the petrol pipe from the tank by undoing the $\frac{5}{16}$ in. union nut.

Support the luggage boot lid in the open position and remove the spare wheel.

Extract the screws securing each half of the luggage compartment floor and lift the floor from its frame.

Slacken the filler neck hose clip and withdraw the filler and rubber ferrule. Disconnect and insulate the flexible lead from the negative battery terminal and disconnect the petrol gauge wire from the tank attachment.

Withdraw the screws securing the petrol tank to the body and lift out the tank, taking care not to damage the packing strip beneath the flange.

The tank is replaced by reversing the above procedure. Ensure that the filler neck rubber ferrule forms an effective joint with the body and that the drain plug and washer are fully tightened.

Section B.2

CONSTRUCTION OF THE PETROL PUMP

The petrol pump is an S.U. Type L, 12-volt electric pump (see Fig. B.1).

The pump consists of three main assemblies—the body, the magnet assembly, and the contact breaker.

The alloy body is die-cast in two pieces, the joint between them being sealed by a gasket.

The filter (12) is screwed into the bottom of the hollow main body or casting (8). The pump inlet union (29) is screwed in at an angle on one side. The outlet union (1) is screwed into the top and tightens down on the delivery valve cage (5), which is clamped between the two fibre washers (2 and 6). In the top of the delivery cage is the delivery valve, a thin brass disc (4) held in position by a spring clip (3). Inserted in the bottom of the cage is the suction valve (7), being a similar disc to (4) and resting on a seating machined in the body. Holes connect the space between the valves to the pumping chamber, which is a shallow depression on the forward face of the body. This space is closed by a diaphragm assembly (9) which is clamped at its outside edge between the magnet housing (27) and body (8) and at its centre between the retaining plate and the steel armature (15). A bronze rod (16) is screwed through the centre of the armature, to which the diaphragm is attached, and it passes through the magnet core to the contact breaker, which is located at the other end. A volute spring (28) is interposed between the armature and the end plate of the coil to return the armature and diaphragm.

In order to overcome cases of pressure building up between the laminations of the diaphragm in tropical climates the latest pumps have a small relief hole in the outer diaphragm.

The magnet consists of a cast-iron pot having an iron core (17), on which is wound a coil of copper wire which energizes the magnet. Between the magnet housing and the armature are fitted 11 spherical-edged brass rollers (10). These locate the armature centrally within the magnet at all times and allow absolute freedom of movement in a longitudinal direction. The contact breaker consists of a small bakelite moulding carrying two rockers (25 and 26), which are both hinged to the moulding at one end and are connected together at the top end by two small springs arranged to give a 'throw-over' action. A trunnion is fitted into the centre of the inner rocker, and the bronze push-rod (16) connected to the armature is screwed into this. The outer rocker (26) is fitted with a tungsten point, which makes contact with a further tungsten point on a spring blade (24). This spring blade is connected to one end of the coil, and the other end of the coil is connected to the terminal (20), which also serves to hold the bakelite moulding onto the magnet housing.

A short length of flexible wire is connected to the outer rocker and to the other terminal (23) to provide the earth return when the contacts are closed.

The rocker mechanism is insulated by fibre bushes. Two fibre bushes are fitted to one of the spindles of the 'throw-over' mechanism in order to silence the operation of the contact breaker.

Section B.3

ACTION OF THE PETROL PUMP

The action of the pump is as follows.

When the pump is at rest the outer rocker lies in the outer position and the tungsten points are in contact. The current passes from the terminal through the coil back to the blade, through the points, and to the earth return, thus energizing the magnet and attracting the armature. This comes forward, bringing the diaphragm with it and sucking petrol through the suction valve into the pumping chamber. When the armature has advanced nearly to the end of its stroke the 'throw-over' mechanism operates and the outer rocker flies back, separating the points and breaking the circuit. The spring (28) then pushes the armature and diaphragm back, forcing petrol through the delivery valve at a rate determined by the

requirements of the engine. As soon as the armature gets near the end of this stroke the 'throw-over' mechanism again operates, the points again make contact, and the cycle of operations is repeated.

Section B.4

TO DISMANTLE AND REASSEMBLE THE PETROL PUMP

When a pump comes in for reconditioning the first thing to do is to determine whether it has been in contact with gum formation in the fuel, resulting in the parts in contact with the fuel becoming coated with a substance similar to varnish. These deposits also cause the eventual destruction of the neoprene diaphragm. The easiest way to identify this deposit is by the sense of smell. Smell the pump outlet union; if an unpleasant, stale smell is noticed it will indicate that there is some gum present in the pump. The ordinary sharp, acrid smell of petrol denotes that no gum is present.

Assuming that trouble with gum formation is indicated, the whole of the parts coming into contact with petrol will have to be dismantled, boiled in 20 per cent. caustic soda solution, given a dip in strong nitric acid, and then washed in boiling water, with the exception of aluminium body castings, of course, which should be washed in methylated spirit only.

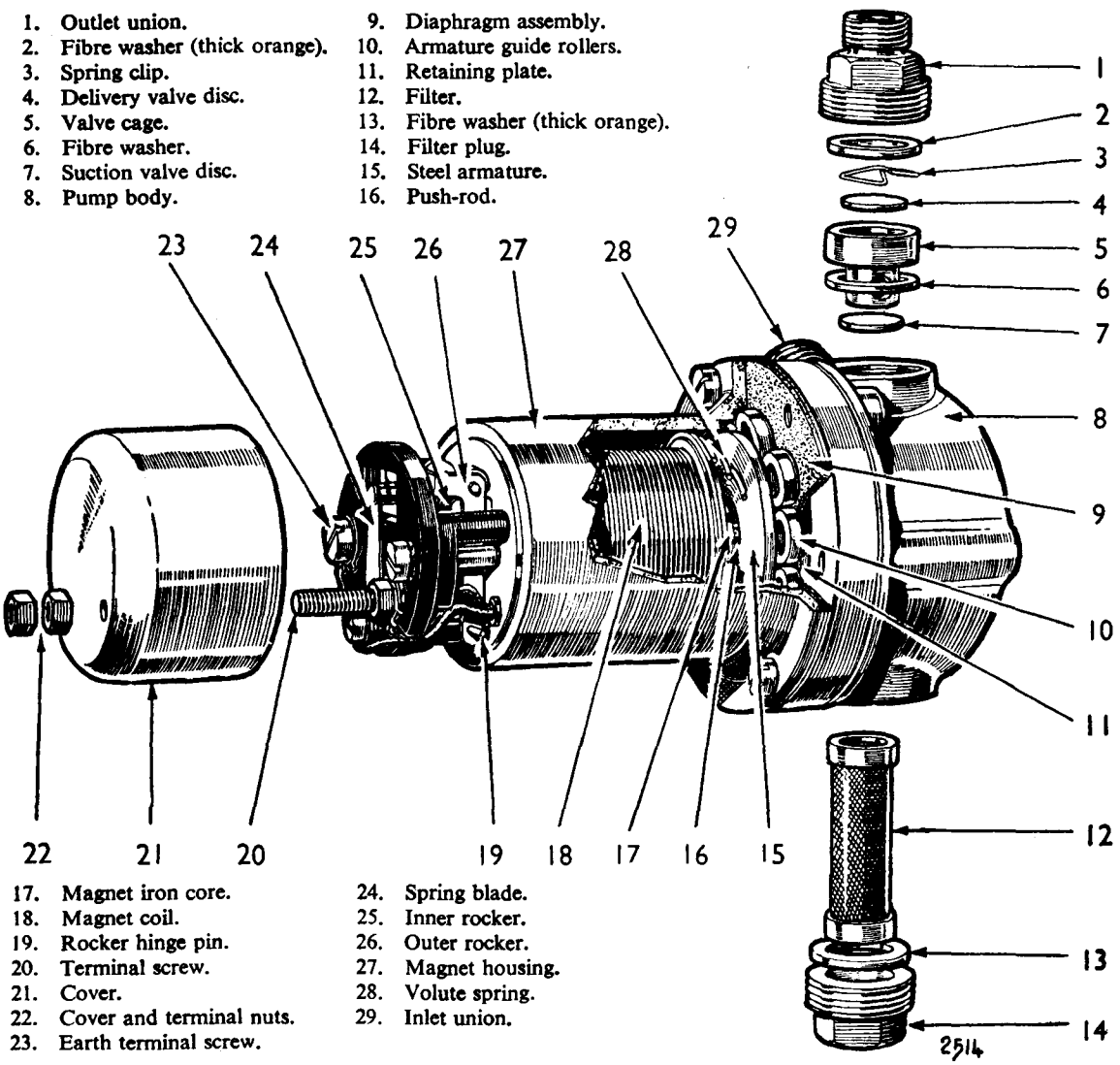

Fig. B.1
The S.U. petrol pump

To dismantle the pump

First undo the filter plug. Remove the filter plug washer and the filter; the latter may be found to be clogged completely with gum. Next the inlet union and its washer should be removed, followed by the outlet

union, outlet union washer, valve cage, valve cage washer, and suction valve. The valve cage should then be dismantled by removing the circlip retaining the delivery valve in place, and the valve itself can then be withdrawn.

Next undo the six screws holding the two main components of the pump together. All the components of the pump body—with the exception of the washer, and the pump body itself when made in aluminium—should now be given the caustic soda and nitric acid treatment. New fibre washers should be used on replacement.

If there is no evidence of gum formation, proceed as follows: first undo the six screws holding the two parts of the pump together. The action of the valves can then

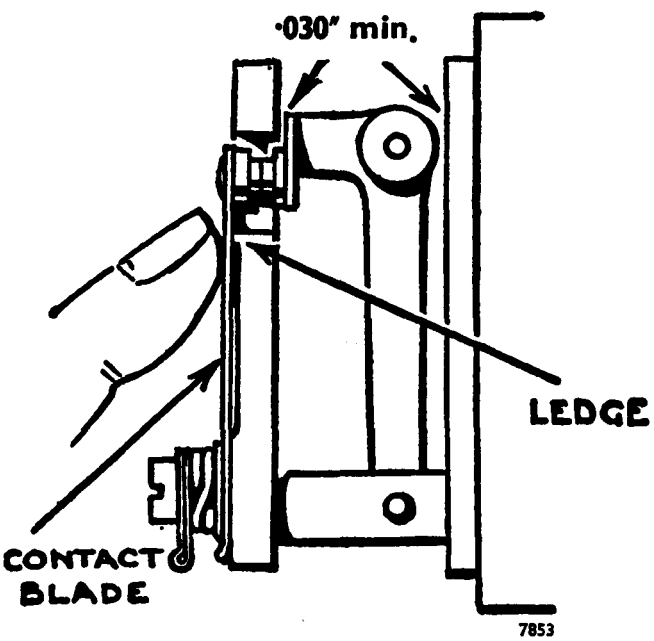

Fig. B.2

The correct setting for the contact breaker points is clearly indicated in this illustration

be checked by blowing and sucking in the inlet union, which will check the suction valve; carrying out the same procedure with the outlet union will check the delivery valve. In the case of the former you should be able to blow freely but not be able to suck air back, and with the latter you should be able to suck freely and not blow air back. If these are in order it is best to leave the valves alone.

Clean the filter in petrol with a brush and swill out the body of the pump.

Next unscrew the diaphragm assembly from its trunnion in the contact breaker. This is done by rotating the whole assembly in an anti-clockwise direction. While doing this care should be taken not to lose the brass rollers fitted behind the diaphragm. The easiest method is to hold the body in the left hand and to rotate the diaphragm.

Now remove the contact breaker cover by taking off the nut which holds it in place on the terminal, and then undo the additional nut on the terminal which acts as a seating for the cover. Beneath this will be found a lead washer which is squeezed into the thread on the terminal. This should be cut away with a pocket-knife, allowing the terminal to be pushed down a short way so that the tag on the coil end is freed.

The 5 B.A. screw holding the contact blade in position should now be removed, together with its spring washer and the contact blade.

The two long 2 B.A. screws holding the bakelite pedestal in place should now be removed, together with their spring washers. This will enable the contact breaker assembly to be taken off, using great care to get the coil end tag over the terminal without damaging the coil end.

The hinge pin on which the rockers pivot can now be pushed out sideways and the pump is completely dismantled, since the rocker mechanism is not supplied in broken-down sections but only as a complete assembly.

Under no circumstances should any attempt be made to disturb the core of the magnet. The core can only be located in position correctly with special press tools, and in any case should not need to be interfered with.

To reassemble the pump

When reassembling see that all parts are clean. The valves (4 and 7) should be fitted with the smooth side downwards. Care should be taken that the valve retaining clip (3) in the delivery valve cage (5) is correctly located in its groove. The thin, hard, red fibre washer (6) should be fitted under the valve cage and a thick, orange-coloured one (2) above the valve cage and also above the filter plug. The washer on the inlet union (29) is a thick, red fibre one.

The contact breaker should be assembled on its pedestal in such a manner that the rockers are free in their mountings, without appreciable side-play. Any excessive side-play on the outer rocker will allow the points to get out of line, while excessive tightness will make the action of the contact breaker sluggish and interfere with its action. To obtain the required freedom in cases of tightness it may be necessary to square the outer rocker up with a pair of thin-nosed pliers. **The hinge pin is case-hardened, and on no account should ordinary wire be used as a replacement. Always use the correct hardened pin.**

Should the spring contact breaker blade be removed, it should always be replaced bearing directly against the bakelite pedestal, i.e. underneath the tag.

When properly fitted the blade should rest against the ledge formed below the opening in the pedestal for the contact points when the points are separated, and it should not be sufficiently stiff to prevent the outer rocker from coming right forward when the points are in contact. The points should make contact when the rocker is in its midway position. The simplest way to check this is to hold the blade in contact with the pedestal, taking care not to press on the overhanging portion, and see that a ·030 in. (·76 mm.) feeler can be inserted between the white rollers and the cast-iron body of the pump (see Fig. B.2). If necessary, the tip of the blade may be set to give the correct clearance.

NOTE.—The spring washer on the B.A. screw to which the earth connection is made should be fitted between the tag and the pedestal. The reason for this is that the spring washer is not a reliable conductor, and the brass tag must therefore bear directly against the head of the screw.

All four connections—namely, the two ends of the earthing tag and the two ends of the coil—should be soldered. The coil end leading to the terminal should be soldered to its tag and not to the retaining nut. In the case of the terminal screw which holds the bakelite cover in position, similar considerations apply, the assembly being—spring washer (1), wiring tag (2), lead washer (3), and recessed nut (4) (see Fig. B.3). A lead washer has been found necessary at this point as some few cases of bad connection have been found. Under no circumstances must the spring washer be omitted or the assembly shortened in any way. Any attempt to do so is likely to lead to breakage of the pedestal when the nut retaining the cover in position is tightened up.

The armature return spring should be fitted with its larger diameter towards the coil and its smaller diameter resting against the armature. This spring must not be stretched or otherwise interfered with, or the action of the pump will be affected.

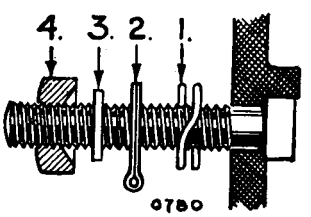

Fig. B.3

The correct sequence of assembly of the connecting components on the terminal screw

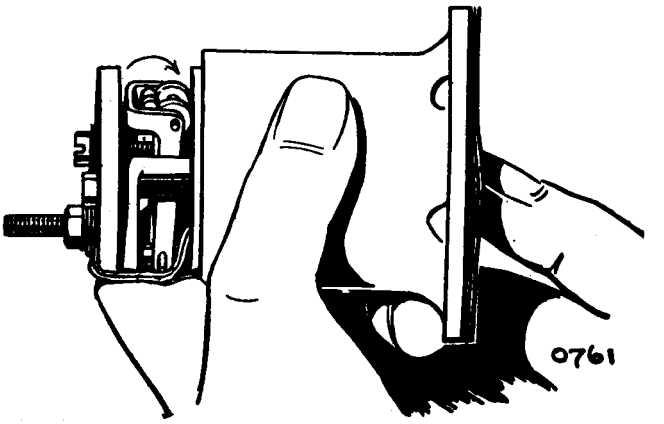

Fig. B.4

The method which should be employed to check the correct setting of the armature

Section B.5

RESETTING THE DIAPHRAGM FOR CONTACT BREAKER 'THROW-OVER'

(1) If the armature and centre rod have been unscrewed it will be necessary to reset them. In order to do this **swing to one side the spring blade which carries the contact points.**

(2) Fit the impact washer in the recess of the armature.

(3) Screw the armature into position.

(4) Place the 11 guide rollers in position around the armature. **No jointing compound may be used on the diaphragm.**

(5) Hold the magnet assembly in the left hand in an approximately horizontal position.

(6) The armature should then be screwed inwards, generously, until the 'throw-over' ceases to operate, and should then be screwed back gradually, a sixth of a turn (or one hole) at a time, and pressed in after each part of a turn until it is found that when it is pushed in slowly and firmly the 'throw-over' mechanism operates. **Then unscrew the armature a further two-thirds of a turn** (four of the six holes). When a new diaphragm is fitted it is probable that considerable pressure will be required to push the armature right home.

(7) Place the cast-iron body in position on the main body, taking care to see that the drain hole in the cast-iron body is at the bottom in line with the filter plug in the main body and that all the rollers are still in their correct positions.

If a roller drops out of position it will get trapped between the two ports, and this will cut a hole in the diaphragm.

Make sure that the cast-iron body is seating properly on the main body and insert the six securing screws. **Before tightening these down it is essential that the diaphragm should be stretched to its outermost position.**

Do this by inserting a matchstick behind one of the white fibre rollers on the outer rocker, thus holding the points in contact (after first repositioning the spring blade into its normal position). If a current is then passed through the pump the magnet will be energized and will pull the armature and diaphragm forward, and while it is in this position the six screws should be tightened Although the diaphragm-stretching operation can

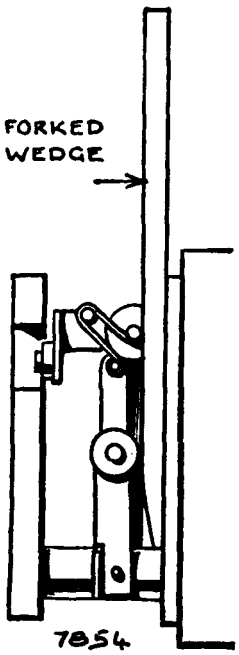

Fig. B.5

The use of a forked wedge to keep the armature in the correct position for fitting the diaphragm

be effected by the matchstick method, a special tool for the purpose is available from the S.U. Carburetter Co. and their distributors. The tool is a steel wedge to be inserted under the trunnion (Fig. B.5) in the centre of the inner rocker in order to stretch the diaphragm to its outermost position before tightening the six flange screws.

(8) Finally, check that when the spring blade is in its normal position the clearance hole in it is so positioned around the locking screw that each contact point, according to the operation of the outer rocker, **wipes over the centre-line of the other contact point,** and that this wiping action is not all to one side of the centre on either contact. The width of the gap at the points is approximately ·030 in. (·76 mm.).

(9) The pump should now be placed on test, using a cut-away cover to enable the contact breaker action to be observed and at the same time prevent the rocker hinge pin from falling out.

A test rig of the type illustrated in Fig. B.6 is advised, and can be obtained complete and ready for use from the S.U. Carburetter Co. or their distributors. Either petrol or paraffin may be used for testing purposes, and the pump should be mounted approximately 3 ft. (90 cm.) above the test tank. The use of a glass tube and rubber connections between the pump and the test tank is advised. When the pump is switched on it should prime itself promptly, and the paraffin, which is normally used for testing, should rise in the glass tube until it flows over the top of the pipe having the $\frac{5}{32}$ in. (4 mm.) hole drilled in it 2 in. (5 cm.) below the top of the pipe. If the output of the pump is not up to normal the $\frac{5}{32}$ in. (4 mm.) diameter hole will be able to deal with all the paraffin pumped and the liquid will not flow over the top of the pipe. If a time test is used 1 pint (·57 litre) of fuel per minute should be pumped.

This, therefore, constitutes a simple form of flow-meter which establishes in a simple manner whether the pump is giving a sufficient output or not. If there is any air leak in the pump or in its connections bubbles will be seen coming out of the pipe projecting downwards into the flow-meter. Bubbles will certainly come through here for a short while after starting up, but they should cease after the pump has been running for a minute or so. The tap should then be turned right off and the pump should stand without repeating its action for at least 15 seconds. If it repeats within this time the suction valve is not seating correctly.

The tap should then be turned off slowly to see if the pump idles satisfactorily and that the outer rocker comes forward till it makes contact with the pedestal, and while it is in this position the tip of the blade should be pressed inwards to reduce the stroke of the pump gradually. However much this stroke is reduced, the pump should go on pumping normally until it fails altogether owing to there being no gap left. If instead of pumping it buzzes, it usually indicates excessive flexibility in the diaphragm. This, of course, is not likely to be experienced with a new diaphragm. The tap should then be turned on again and the pump tested on 9 volts (or on 4½ volts if it is a 6-volt pump), and it should work satisfactorily under these conditions, although probably with a reduced output.

It is as well to let the pump run for 10 minutes or so before carrying out these various tests. The cover, which is black for 12-volt andbrown for 6-volt, should then.

be fitted and held in place with an ordinary brass nut and an insulated dome nut fitted on the end of the terminal. The type of the pump can always be identified by the colour of the sleeving on the coil ends, this being red for low pressure and brown for high pressure (both being 12-volt).

NOTE.—There are three important points which are repeatedly overlooked by operators. These seriously affect the functioning of the pump; they are:

(1) To keep the contact breaker blade out of contact while obtaining the correct diaphragm setting.

(2) To press firmly and steadily on the armature instead of jerking it while obtaining the setting.

(3) Omission to stretch the diaphragm to the limit of its stroke while tightening up the body screws.

Section B.6

TRACING PETROL PUMP TROUBLES

Should the pump cease to function, first disconnect the petrol delivery pipe from the pump. If the pump then works the most likely cause of the trouble is a sticking needle in the float-chamber of the carburetter. Should the pump not work, disconnect the lead from the terminal and strike it against the body of the pump after switching on the ignition. If a spark occurs it indicates that the necessary current is available at the terminals and that the trouble arises with the pump mechanism. If no spark can be detected, then it is an indication that the current supply has failed and that attention should be given to the wiring and battery. If current is present, further investigation should be carried out by removing the bakelite cover, which is retained by the terminal nut. Touch the terminal with the lead. If the pump does not operate and the contact points are in contact, yet no spark can be struck off the terminal, it is very probable that the contact points are dirty and require cleaning. These may be cleaned by inserting a piece of card between them, pinching them together lightly, and sliding the card backwards and forwards.

If, when the wire is connected to the terminal and the tickler of the carburetter is depressed, the points fail to break it is possible that there is either an obstruction in the suction pipe, which should be cleared by blowing it through with air, or some irregularity in the pump itself is preventing the correct movement. This may be due either to the diaphragm having stiffened, or to foreign matter in the roller assembly which supports the diaphragm, in which case the diaphragm should be removed and the whole assembly cleaned and reassembled in accordance with the instructions in Sections B.4 and B.5.

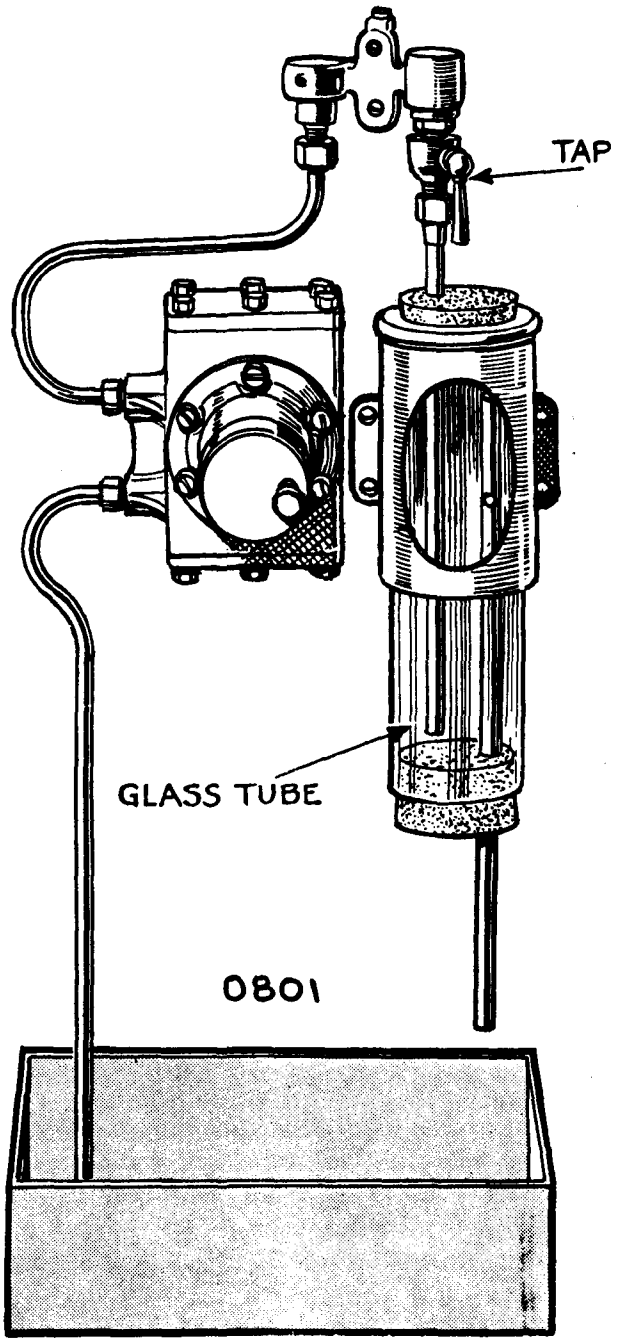

Fig. B.6
Checking rig

On the other hand, if the points are not making contact, see that the tips of the inner rocker (25) are in contact with the magnet housing. If they are not it is an indication that the armature has failed to return to the end of its normal travel.

To cure this loosen the six screws which attach the magnet housing to the pump body and make sure that the diaphragm is not sticking to the face of the magnet

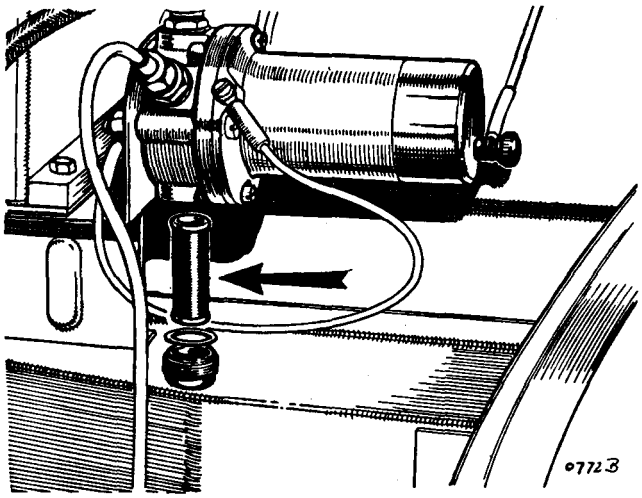

Fig. B.7

The petrol pump, showing the filter withdrawn for cleaning. Make sure that the terminal nuts are tight, particularly the one for the earth wire

housing by carefully passing a penknife between the two. The hinge pin (19) should then be removed and the six retaining screws tightened up again. The tips of the inner rockers will probably now be found to be making contact with the face of the magnet housing, but if they are not it will be necessary to remove and dismantle the whole magnet assembly in order to ascertain if an accumulation of foreign matter has caused a jam. Remember that whenever the magnet housing is removed care should be taken to see that the guide rollers (10) do not drop out.

Pump noisy

If the pump becomes noisy and works rapidly it is usually an indication that there is an air leak on the suction side of the pump. Check the level of the petrol in the tank and see that it is not too low.

The simplest way to test for air leakage is to disconnect the petrol pipe from the carburetter and place its end in a glass jar (approximately 1 pint or half a litre) and allow the pump to deliver petrol into it. If air bubbles appear when the end of the pipe has become submerged in the petrol it is a clear indication of an air leak on the suction side of the pump in the petrol feed pipe between the tank and the pump which should be found and cured. Check all the unions and joints, making sure that the filter union and inlet unions are all quite air-tight.

Failure to deliver petrol

Should the pump continue beating without delivering petrol, it is probable that some dirt has become lodged under one of the valves, in which case they should be dismantled by unscrewing the top or delivery union and lifting out the valve cage, when they can be cleaned and reassembled. When replacing it see that the thin, hard, red fibre washer is **below** the valve cage and the thick, orange one above.

If the pump struggles to pump and becomes very hot it is probable that the filter has become clogged or there is an obstruction on the suction side. The filter is readily removed for cleaning by unscrewing its retaining plug at the bottom of the pump.

Section B.7

PETROL PUMP MAINTENANCE

Apart from keeping the contacts clean and removing the filter at regular intervals for cleaning, there is no maintenance required on the petrol pump.

The filter can be removed by unscrewing the hexagon plug at the bottom of the pump, when it can be cleaned in petrol with a stiff brush. Never use rag to clean a filter.

Many of the troubles encountered with the pump are a result of the terminals not being tight, resulting in poor connections. Make sure that the earth wire terminal, in particular, is quite tight.

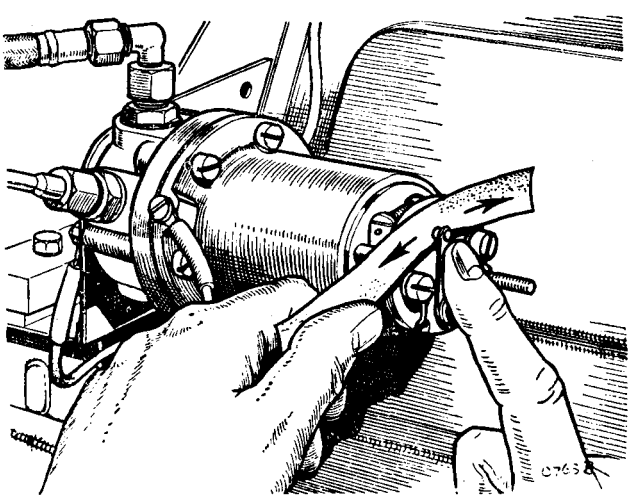

Fig. B.8

The contact breaker points can be cleaned by drawing a strip of paper between them while holding them lightly together with a finger. If in bad condition they should be cleaned with a fine carborundum stone after dismantling

Section B.8

CARBURETTER

The carburetter is an S.U. of the controllable jet type, fitted with an air silencer or air cleaner.

A damper is provided consisting of a plunger and non-return valve attached to the oil cap nut and operating in the hollow piston rod, which is partly filled with oil. Its function is to give a slightly enriched mixture on acceleration by controlling the rise of the piston and prevent piston flutter.

At the specified intervals remove the damper unit and pour oil to Ref. F (page P.2) into the hollow piston rod to a point ½ in. (13 mm.) above the top of the rod.

tion that the engine idles at a moderate speed. Adjust the jet to give a richer mixture by screwing the jet adjusting nut downwards, keeping the jet head in contact with it, until the mixture is obviously too rich, as indicated by 'hunting' and a sooty exhaust. Now screw the jet adjusting nut upwards, still keeping the jet head in contact with it, until it brings the jet to the position where the engine idles with an even exhaust and runs at the best possible speed for this throttle opening.

A simple way to test for correct mixture at this stage is to lift the piston up slightly to a height of approxi-

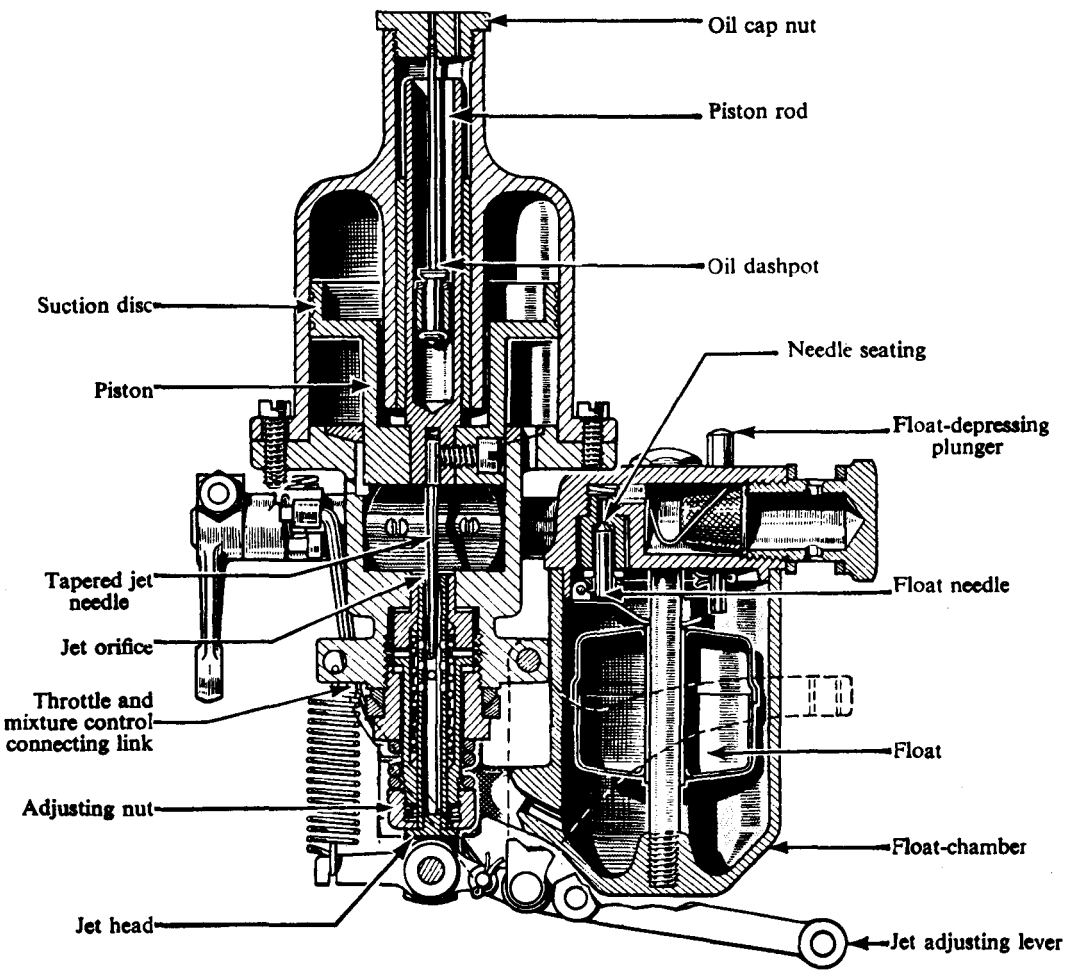

Fig. B.9

The S.U. carburetter. On later models the float-chamber is on the forward side of the carburetter

Section B.9

CARBURETTER ADJUSTMENTS

Mixture

Run the engine until it attains its normal running temperature.

Adjust the throttle abutment screw to such a posi-

mately $\frac{1}{32}$ in. (·8 mm.). When this is done the engine should run slightly faster. If it runs appreciably faster and continues to do so when the piston is still further lifted the mixture is too rich.

If the engine stops when the piston is raised $\frac{1}{32}$ in. (·8 mm.) the mixture is too weak. Final slow-running adjustment is carried out by resetting the throttle.

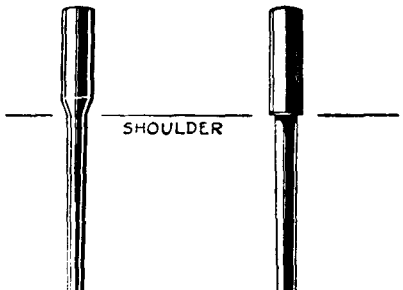

Fig. B.10

The shoulder of the needle should be flush with the under face of the piston. Two types of shoulder are in use and the correct datum point for each is shown

If, after this adjustment has been made, the performance is not satisfactory a different needle may be necessary. If the car pulls better with the manual control pulled out slightly a richer needle is indicated, and the reverse if the running becomes worse.

Should it be necessary to change the needle, this can be done by removing the two screws holding the suction chamber in position and lifting off the suction chamber, after marking its position to ensure that it is refitted in its original position. The piston can now be removed. At the side of the piston will be found a set screw. When this is slackened off the needle can be withdrawn and the new needle fitted. **The correct position of the needle is with its shoulder flush with the face of the piston.** When replacing, ensure that the keyway at the side of the piston registers with the key in the body and that all machined faces and parts are kept scrupulously clean.

Float-chamber

On early models the float-chamber is at the rear of the carburetter, and on later models it is fitted on the forward side of the carburetter.

The position of the forked lever in the float-chamber must be such that the level of the float (and therefore the height of the fuel at the jet) is correct.

This is checked by inserting a $\frac{3}{8}$ in. (9·5 mm.) round bar between the forked lever and the machined lip of the float-chamber lid. Use a $\frac{7}{16}$ in. (11 mm.) bar to set the lever on $2\frac{1}{4}$ in. (5·7 cm.) diameter float-chambers. The prongs of the lever should just rest on the bar (see Fig. B.12) when the needle is on its seating. If this is not so, the lever should be reset at the point where the prongs meet the shank. Do not bend the shank.

Mixture control and throttle interlinkage

Adjust the throttle interlinkage screw so that there is just clearance between its end and the anvil of the small rocking lever, which is linked to the jet control lever when the mixture control knob is pushed right home.

Section B.10

CENTRING THE JET

First remove the clevis pin at the base of the jet which attaches the jet head to the jet operating lever; withdraw the jet completely and remove the adjusting nut and the adjusting nut spring. Replace the adjusting nut without its spring and screw it up to the highest position. Slide the jet into position until the jet head is against the base of the adjusting nut. When this has been done feel if the piston is perfectly free by lifting it up with the finger with the dashpot piston removed. If it is not, slacken the jet holding screw and manipulate the lower part of the assembly, including the projecting part of the bottom half jet bearing, adjusting nut, and jet head. Make sure that this assembly is now slightly loose. The piston should then rise and fall quite freely as the needle is now able to move the jet into the required central position. The jet holding screw should now be tightened and a check made to determine that the piston is still quite free. If it is not found to be so the jet holding screw should be slackened again and the operation repeated. When complete freedom of the piston is achieved the jet adjusting nut should be removed, together with the jet, and the spring replaced. The adjusting nut should now be screwed back to its original position.

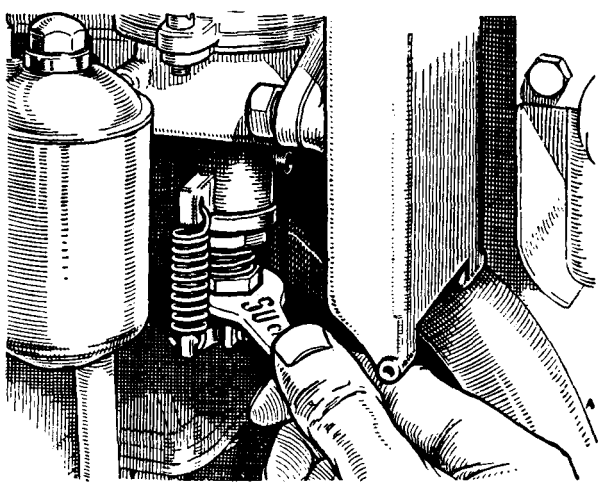

Fig. B.11

Adjustment of the jet is achieved by turning the jet adjusting nut in the appropriate direction as shown

Section B.11

SOURCES OF CARBURETTER TROUBLE

Piston sticking

The piston assembly comprises the suction disc and the piston forming the choke, into which is inserted the hardened and ground piston rod which engages in a bearing in the centre of the suction chamber and in which is, in turn, inserted the jet needle. The piston rod running in the bearing is the only part which is in actual contact with any other part, the suction

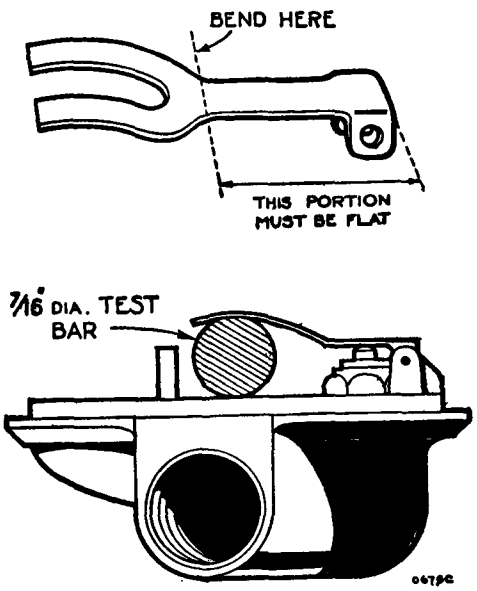

Fig. B.12

Showing the place where the float lever should be set and (below) the method of checking the correct adjustment of the lever

disc, piston, and needle all having suitable clearances to prevent sticking. If sticking does occur the whole assembly should be cleaned carefully and the piston rod lubricated with a spot of thin oil. No oil must be applied to any other part except the piston rod. A sticking piston can be ascertained by removing the dashpot piston damper, inserting a finger in the air intake, and lifting the piston, which should come up quite freely and fall back smartly onto its seating when released.

Water or dirt in the carburetter

When this is suspected lift the piston with a pencil. The jet can then be seen. Flood the carburetter by depressing the float-depressing plunger and watch the

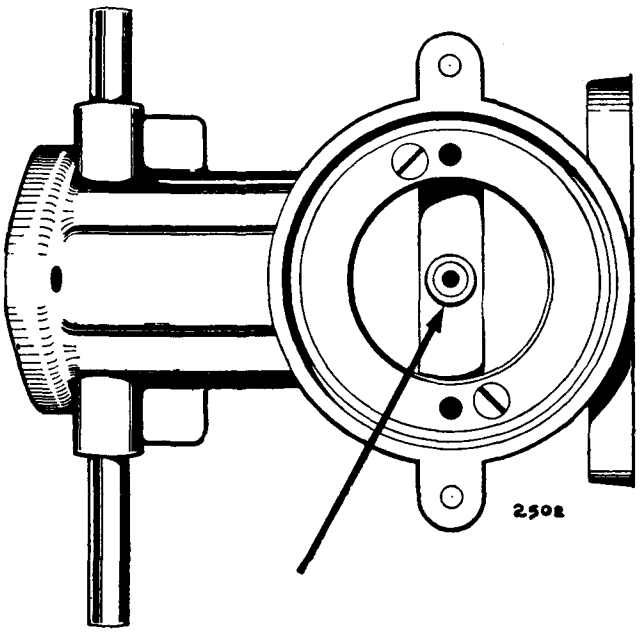

Fig. B.13

Indicates an incorrectly centred jet which is eccentric to the jet aperture in the carburetter body

jet; if the petrol does not flow through freely there is a blockage. To remedy this, start the engine, open the throttle, and block up the air inlet momentarily without shutting the throttle, keeping the throttle open until the engine starts to race. This trouble seldom arises with the S.U. carburetter owing to the size of the jet and petrol ways. When it does happen the above method

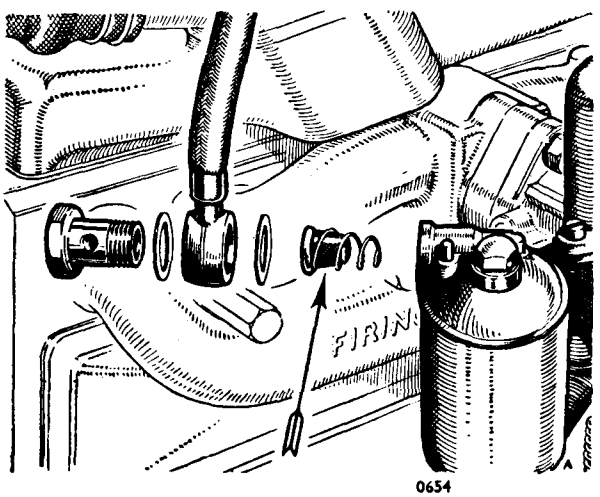

Fig. B.14

The carburetter filter should be removed and cleaned at the specified intervals. Use a brush and petrol—never use a rag

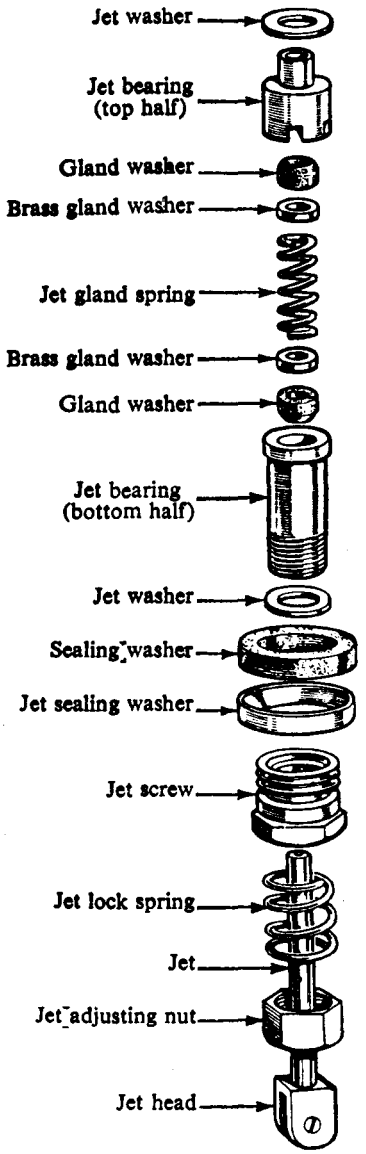

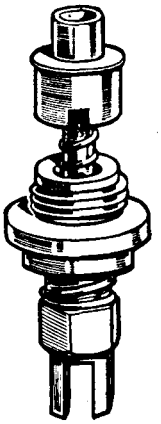

The jet assembly

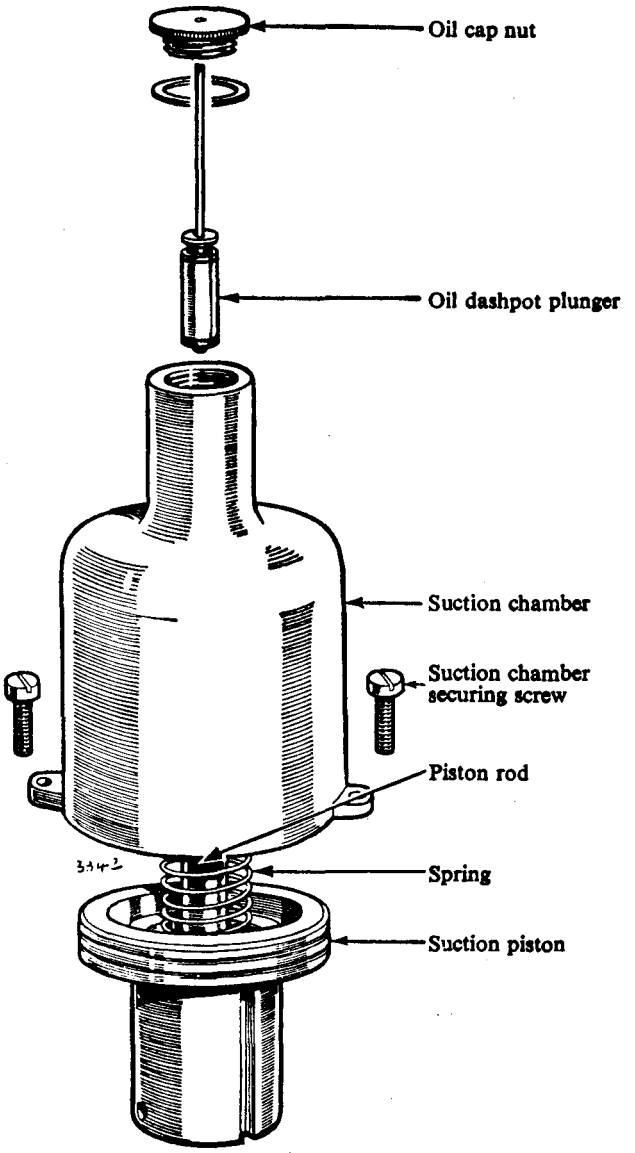

Fig. B.15 (above)

The component parts of the S.U. carburetter jet and suction chamber

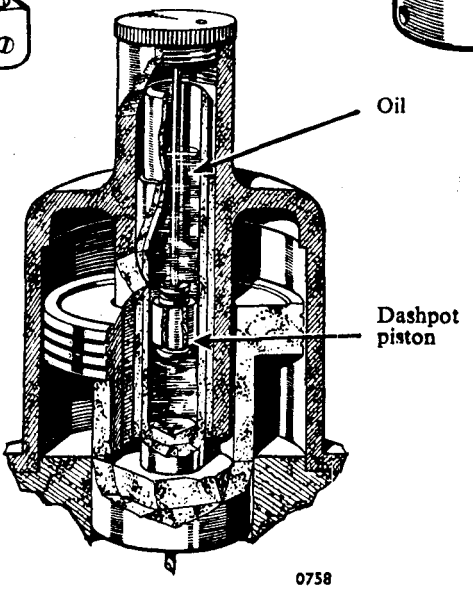

Fig. B.16 (right)

The carburetter suction chamber, suction disc, piston, and piston rod partly sectioned to show the details of the oil dashpot

will nearly always clear it. Should it not do so, the only alternative is to remove the jet.

This, however, should on no account be done unless it is absolutely necessary as it has to be carefully centred when fitting, and it is practically impossible to assemble this part correctly unless it is first thoroughly understood how to carry this out (see Section B.10).

Float needle sticking

If the engine stops, apparently through lack of fuel, when there is plenty in the tank and the pump is working properly, the probable cause is a sticking float needle. An easy test for this is to disconnect the pipe from the electric pump to the carburetter and switch on the ignition to check if fuel is delivered; if it is, starvation has almost certainly been caused by the float needle sticking to its seating, and the float-chamber lid should therefore be removed, the needle and seating cleaned, and refitted. At the same time it will be advisable to clean out the entire fuel feed system as this trouble is caused by foreign matter in the petrol, and unless this is removed it is likely to recur. It is of no use whatever renewing any of the component parts of the carburetter,

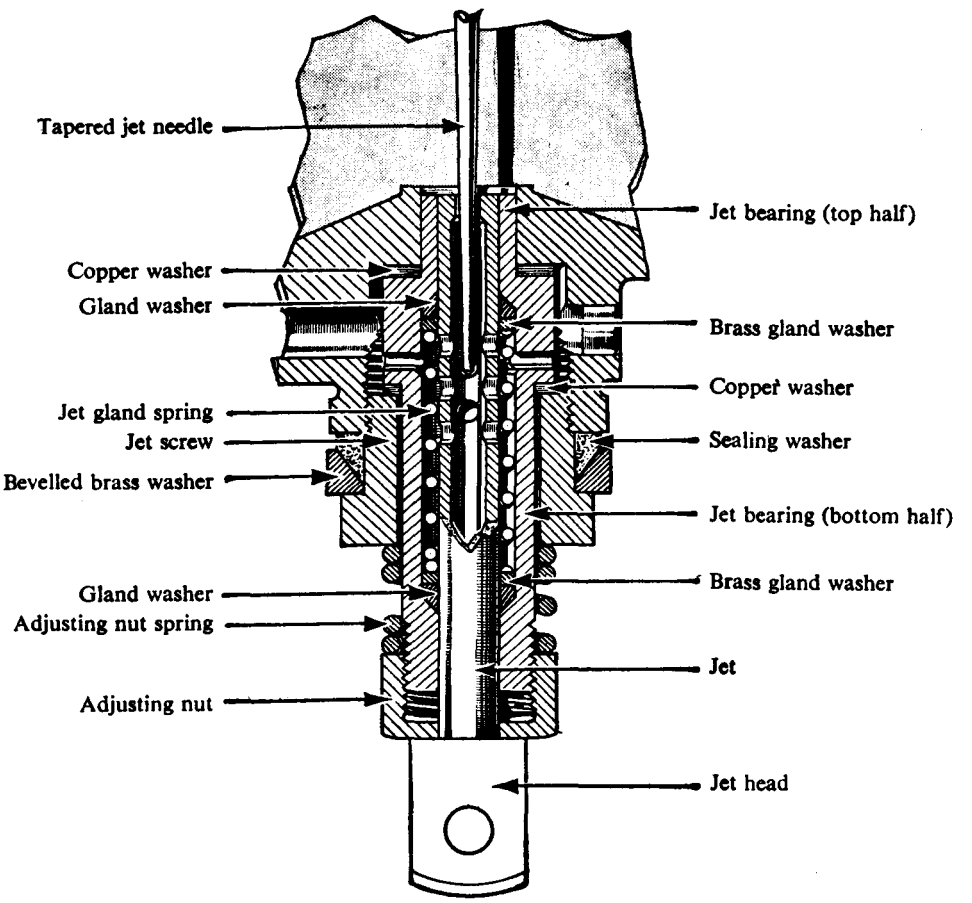

Fig. B.17

An enlarged view of the jet assembly, showing its component parts

Float-chamber flooding

This can be seen by the petrol flowing over the float-chamber and dripping from the air inlet, and is generally caused by grit between the float-chamber needle and its guide. This can usually be cured by depressing the float-depressing plunger to allow the incoming flow of petrol to wash the grit through the guide and into the float-chamber.

THE CARBURETTER AND STARTER CONTROL COMPONENTS

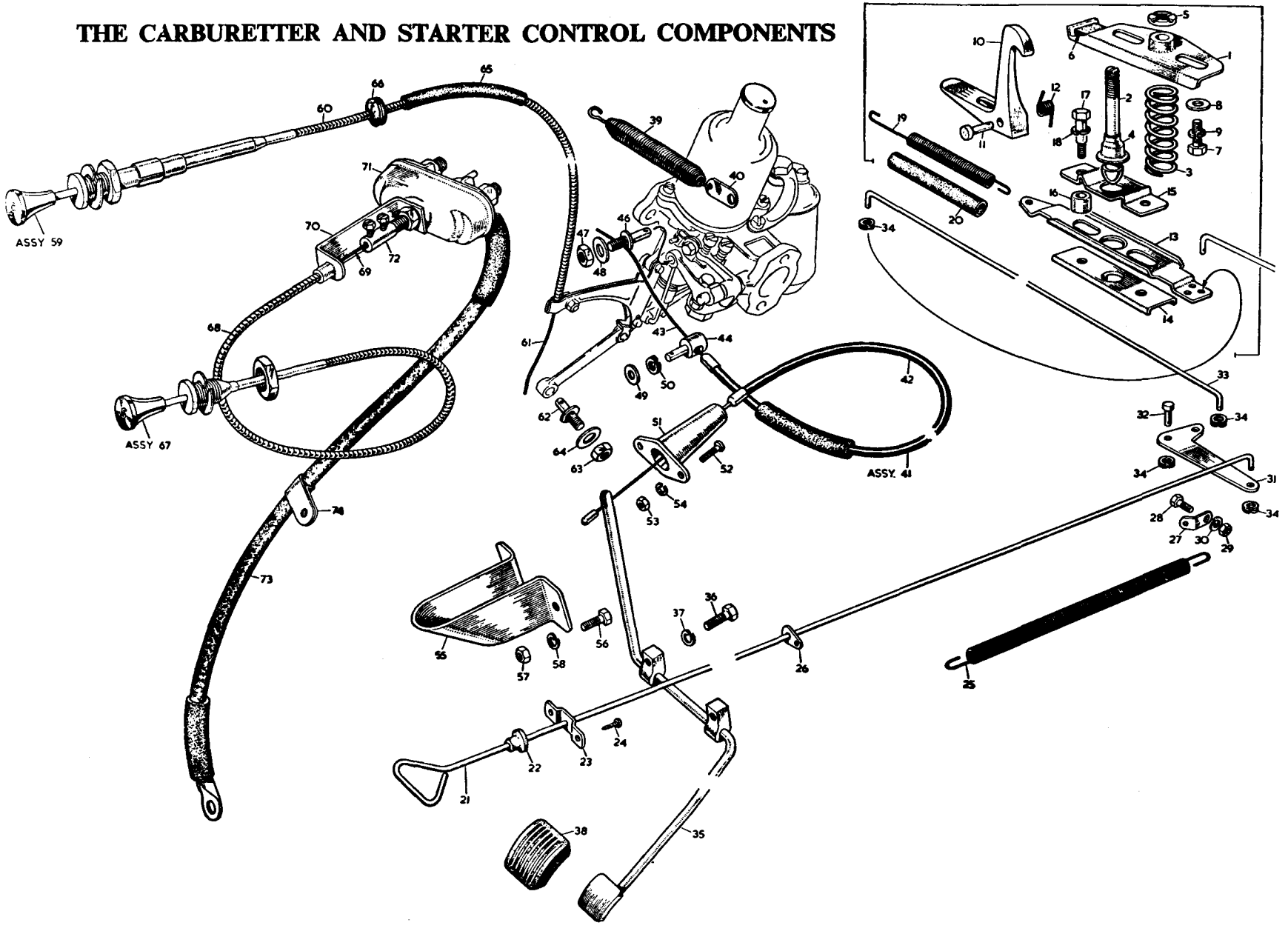

KEY TO THE CARBURETTER AND STARTER CONTROL COMPONENTS

No.	Description
1.	Bracket—lower.
2.	Pin—lock striker.
3.	Spring—striker pin.
4.	Cup—spring retaining.
5.	Ring—pin locking.
6.	Buffer—safety hook.
7.	Screw—pin assembly to bonnet.
8.	Washer—pin screw.
9.	Washer—spring.
10.	Catch assembly—safety.
11.	Pin—safety catch.
12.	Spring—safety catch.
13.	Slide—bonnet lock.
14.	Support—lock slide.
15.	Plate—slide guide.
16.	Tube—distance—slide.
17.	Bolt—slide to cowl.
18.	Washer—spring.
19.	Spring—slide tension.
20.	Sleeve—rubber—tension spring.
21.	Rod—bonnet lock control.
22.	Grommet—rod through dash.
23.	Retainer—grommet.
24.	Screw—retainer to dash.
25.	Spring—anti-rattle.
26.	Link—spring to control rod.
27.	Link—spring to body.
28.	Screw—link to body.
29.	Nut—link screw.
30.	Washer—spring—link screw.
31.	Lever—control rod.
32.	Pin—lever pivot.
33.	Rod—lever to lock slide.
34.	Washer—spring—rods and lever pin.
35.	Pedal assembly.
36.	Bolt—pedal to dash.
37.	Washer—spring—pedal bolt.
38.	Pad—rubber.
39.	Spring—pedal return.
40.	Link—spring to cable.
41.	Cable assembly—accelerator.
42.	Cable—outer.
43.	Cable—inner.
44.	Ferrule pin.
46.	Pin—cable to carburetter lever.
47.	Nut—lever pin.
48.	Washer—lever pin nut.
49.	Washer—ferrule pin to bracket.
50.	Washer—spring—ferrule pin.
51.	Guide—cable through dash.
52.	Screw—guide to dash.
53.	Nut—guide screw.
54.	Washer—spring.
55.	Guard—pedal.
56.	Screw—guard to dash.
57.	Nut—guard screw.
58.	Washer—spring.
59.	Control assembly—mixture.
60.	Cable—outer.
61.	Cable—inner.
62.	Pin—cable to carburetter lever.
63.	Nut—lever pin.
64.	Washer—lever pin.
65.	Tube—rubber.
66.	Grommet through dash.
67.	Control assembly.
68.	Cable—outer.
69.	Cable—inner.
70.	Bracket—cable.
71.	Switch—starter.
72.	Coupling—starter switch.
73.	Cable—switch to starter.
74.	Clip—starter cable to dash.

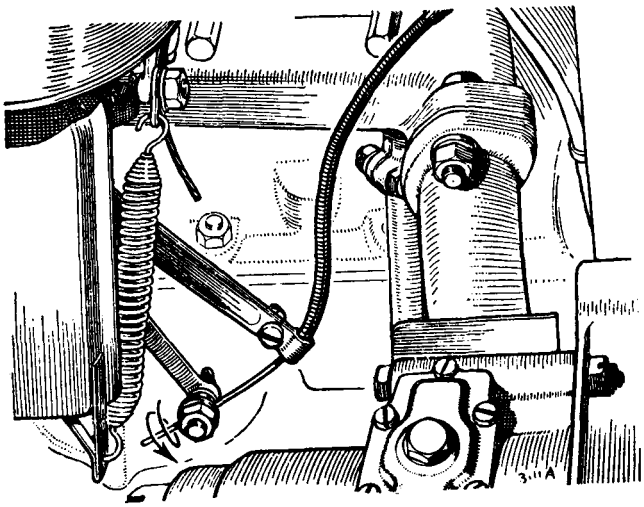

Fig. B.18

The manner in which the inner cable of the carburetter mixture control must be twisted to ensure proper functioning of the ratchet device on later models

and the only cure is to make sure that the petrol tank and pipe-lines are entirely free from any kind of foreign matter or sticky substance capable of causing this trouble.

Mixture control failing to lock

An improved mixture control having a radial movement restricted to 90° is fitted to later models, and it is essential for the proper functioning of the ratchet device that there is a rotational bias on the cable when it is clamped in position to the carburetter mixture control lever. To ensure this the inner cable must be given an initial twist of approximately half a turn in a clockwise direction, looking at the end of the cable, before the clamping nut is tightened up (see Fig. B.18).

Section B.12

AIR SILENCER (Home Models)

Cars supplied to the Home market are fitted with an air intake silencer.

No maintenance is required.

AIR CLEANER (Export Models)

Cars supplied overseas are fitted with an oil bath air cleaner of the A.C. type.

Reference to Fig. B.21 shows that the air enters the cleaner through the opening between the shell and the top cover. It then passes downwards through the annular passage between the two and strikes the oil shelf, reversing upwards into the filter element through the openings provided in the filter casing.

The majority of the dust and dirt suspended in the ingoing air is precipitated into the oil in the bottom of the cleaner when the air stream reverses above the oil shelf and settles in the bottom of the oil sump as sludge. Subsequently a cleaning operation also takes place as the partly cleaned air is drawn upwards through the woven metallic mesh filtering element.

The cleaned air passes out of the filter element through the top openings and then to the air intake through the central passage.

The filter element is automatically oiled and washed by oil picked up from the shelf by the incoming air.

Cleaning and re-oiling

The cleaner should be cleaned and filled with new oil at the specified intervals, or more frequently if inspection for sludge shows this to be necessary.

Wash the filter element thoroughly in a bowl of paraffin (kerosene), and allow it to drain and dry thoroughly.

Lift out the oil container, empty the oil, and scrape out the accumulated sludge. Wash the entire oil container in paraffin (kerosene) and fill to the indicated level with engine oil (Ref. A, page P.2). It is not necessary to re-oil the filter element as this is done automatically as soon as the engine starts up.

Make sure that the cork sealing gaskets are in good condition and reassemble the cleaner.

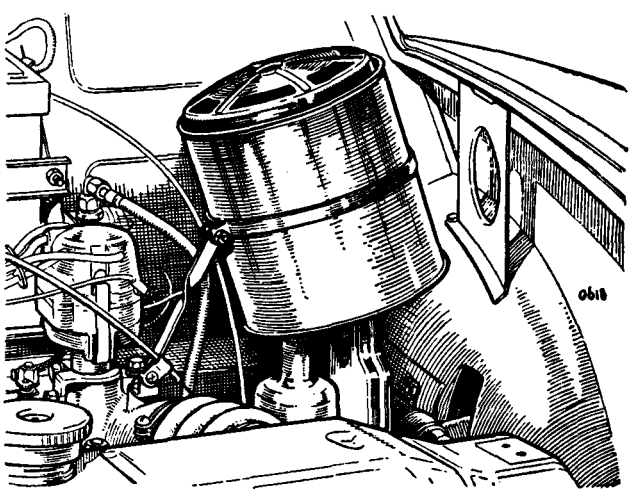

Fig. B.19

The air silencer fitted to Home models

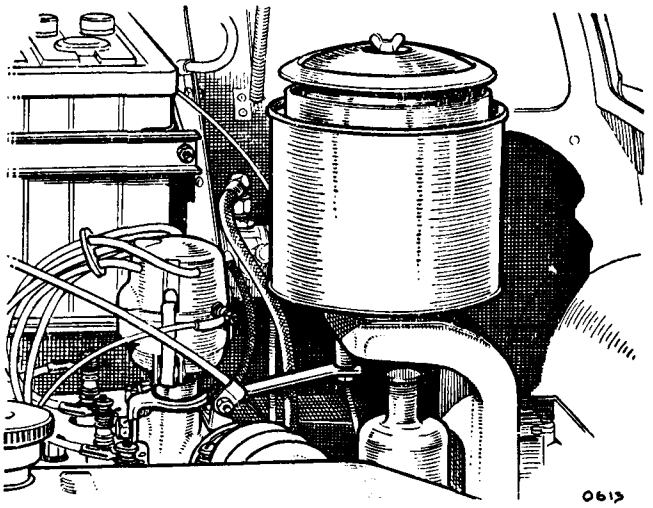

Fig. B.20

The oil bath air cleaner fitted to models for use overseas

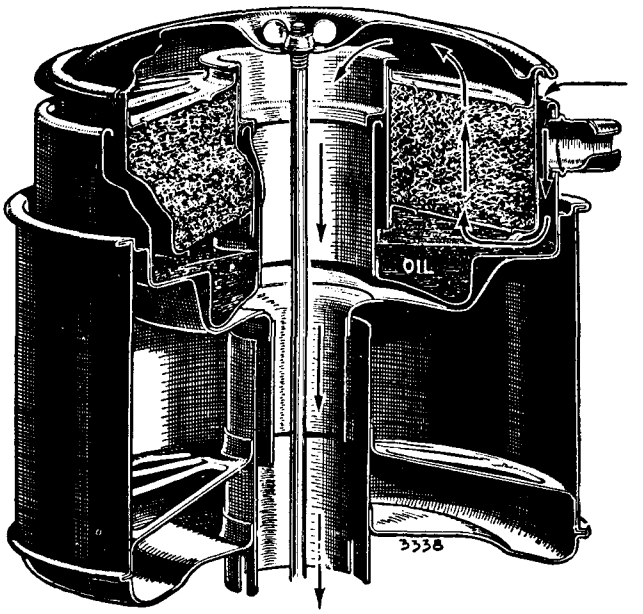

Fig. B.21

A section through the air cleaner, showing its construction and the path taken by the incoming air

Section B.13

INDUCTION HEATERS

To deal with the conditions of extreme cold existing in some countries an induction heater is fitted between the carburetter and the induction manifold on models exported to the countries affected.

Induction heaters (Part No. 31670) can be fitted to cars not so equipped in the following manner:

(1) Remove the existing air silencer (or oil bath cleaner) and carburetter intake pipe.
(2) Remove the carburetter from the manifold.
(3) Remove the carburetter studs from the manifold flange and clean the flange face thoroughly, taking care to keep it perfectly flat.
(4) Insert two longer studs (Part No. 31672).
(5) Fit the induction heater (Part No. 31670) on the studs with the bulb of the thermostat at the top and pointing inwards towards the centre-line of the engine and without the spacer (Part No. 15615).
(6) Drill a $\frac{13}{32}$ in. (10·5 mm.) diameter hole through the bulkhead and fit the grommet (Part No. 86663).
(7) Pass the tag end of the heater wire through the grommet and bulkhead from the inside, and connect it to the thermostat terminal.
(8) Disconnect the single snap connector in the windscreen wiper lead and connect the two wires into the double snap connector on the heater.
(9) Refit the carburetter intake pipe and the new air cleaner bracket (Part No. 31671) for the Export-type cleaner, or bracket (Part No. 31673) for the Home-type air silencer.
(10) Replace the air cleaner or silencer.

SECTION BB

THE FUEL SYSTEM
OF THE MORRIS MINOR (Series II)

Section BB.1

MAINTENANCE OF THE FUEL SYSTEM

The fuel system used on the Morris Minor (Series II) is similar in principle to that on the Morris Minor (Series MM), and when maintaining or adjusting the carburetter or petrol pump reference should be made to the appropriate paragraph in Section B. To assist in using the instructions given in Section B a number of illustrations are given here of the components of the Morris Minor (Series II) fuel system.

Section BB.2

AIR CLEANER (Home Models)

Cars supplied to the Home market are fitted with an oil-wetted-type air cleaner.

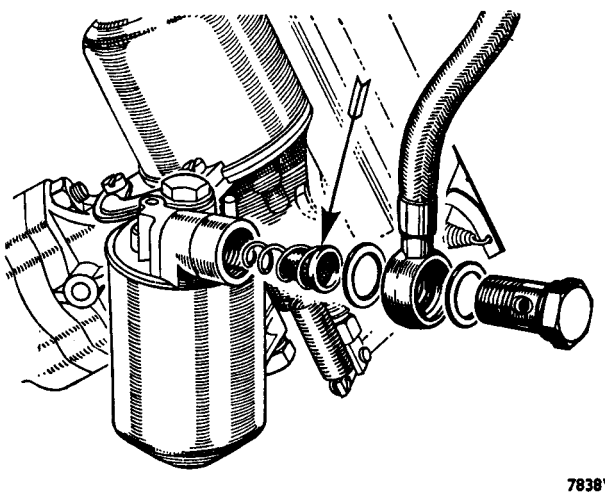

Fig. BB.1

The carburetter filter should be removed and cleaned at the specified intervals (see Section B.11)

At the specified intervals remove the cleaner and wash it in petrol (gasoline). After washing, dry the cleaner thoroughly and re-oil the gauze before refitting.

AIR CLEANER (Export Models)

The oil-bath-type air cleaner fitted to the Morris Minor (Series II) differs from that fitted to the Morris Minor (Series MM) in that the cover and filter element assembly are in one piece as opposed to being separate components. A similar procedure should be followed in both cases when cleaning and re-oiling, except that there is only one gasket which may need renewing on the Series II air cleaner.

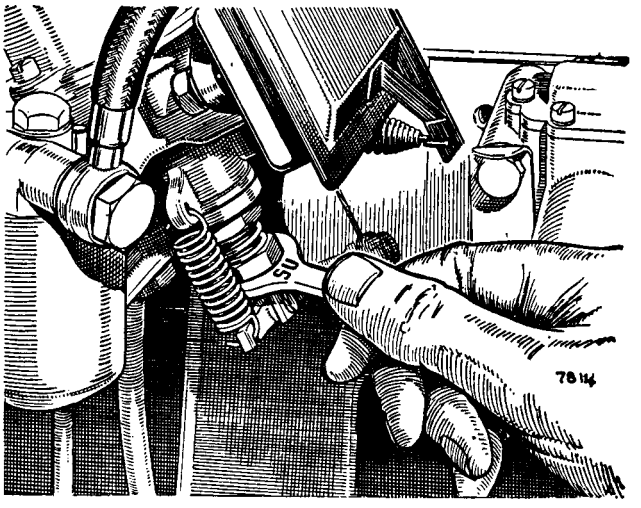

Fig. BB.2

Adjusting the jet (see Section B.9)

Section BB.3

INDUCTION HEATERS

To deal with the conditions of extreme cold existing in some countries an induction heater is fitted between the carburetter and the induction manifold on models exported to the countries affected.

Induction heaters (Part No. 31670) can be fitted to cars not so equipped in the following manner:

(1) Remove the existing air silencer (or oil bath cleaner) and carburetter intake pipe.

(2) Remove the carburetter from the manifold.

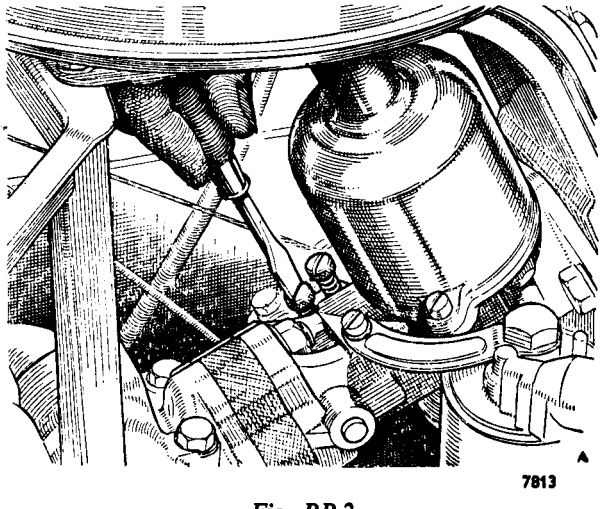

Fig. BB.3

Adjusting the slow-running by means of the throttle lever stop screw (see Section B.9)

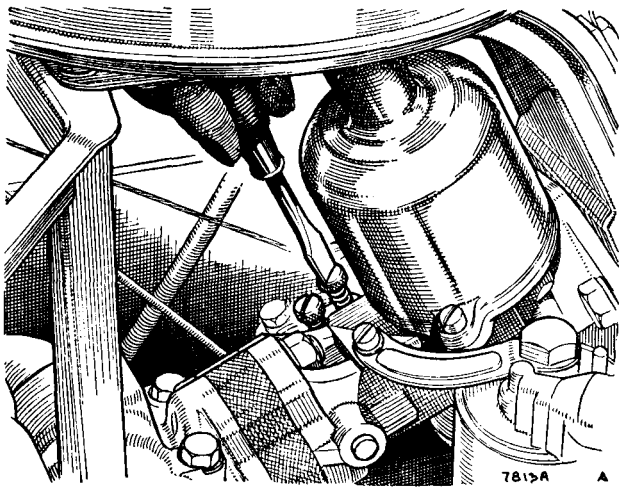

Fig. BB.4

Adjusting the gap between the throttle interconnecting lever and the throttle operating lever (see Section B.9)

(3) Clean the flange face thoroughly, taking care to keep it perfectly flat.

(4) Fit the induction heater on the studs with the bulb of the thermostat at the bottom pointing inwards towards the centre-line of the engine and without the spacer.

(5) Pass the tag end of the wire through one of the existing holes in the dash and connect it to the thermostat terminal.

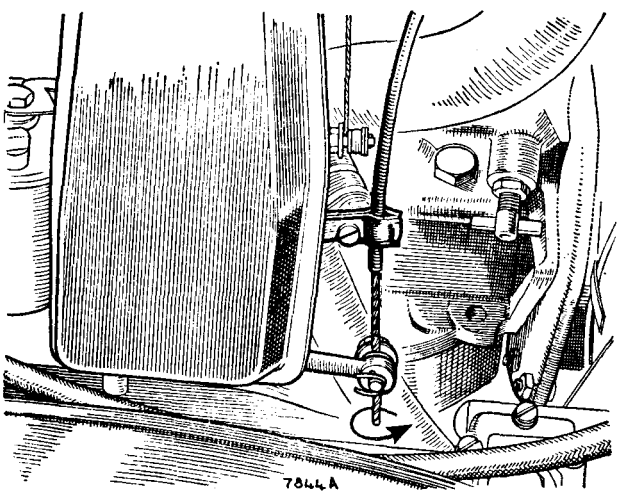

Fig. BB.5

The method in which the inner cable of the carburetter mixture control must be twisted to ensure proper functioning of the ratchet device (see Section B.11)

(6) Disconnect the single snap connector in the windscreen wiper lead behind the instrument panel and connect the two wires into the double snap connector on the heater.

(7) Refit the carburetter intake pipe and replace the air cleaner or silencer.

Section BB.4

DUST-PROOFED CARBURETTERS

A dust-proofed carburetter in which the piston suction chamber draws cleaned air from the air cleaner pipe only is fitted to later models and can be recognized by

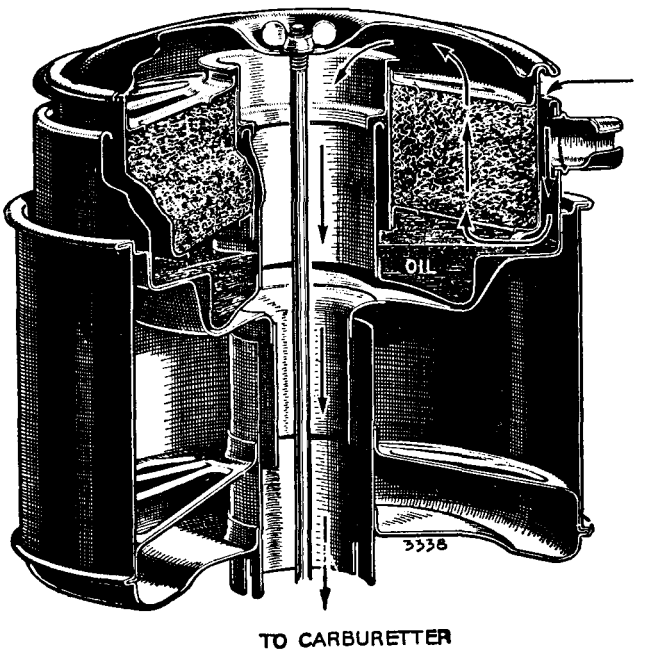

Fig. BB.6

A section through the oil bath air cleaner fitted to the Morris Minor (Series II) (Export)

the additional hole in the carburetter air cleaner flange. There is also an additional hole in the flange seal and air pipe, and it is essential that only the latest-type air pipe (Part No. ARA 0013) and latest-type seal (Part No. ACA 5071) are used with the latest-type carburetter. The new pipe and seal may be used to service an earlier carburetter without affecting its operation.

The new carburetter also has a larger union for the vacuum ignition advance pipe, and a new pipe with a larger nut is fitted.

The above changes were introduced at Engine No. 61601.

SECTION BBB

THE FUEL SYSTEM
OF THE MORRIS MINOR 1000

Section BBB.1

MAINTENANCE OF THE FUEL SYSTEM

The fuel system used on the Morris Minor 1000 is similar in principle to that on the Morris Minor (Series MM and Series II), and when maintaining or adjusting the carburetter or petrol pump reference should be made to the appropriate paragraph in Section B.

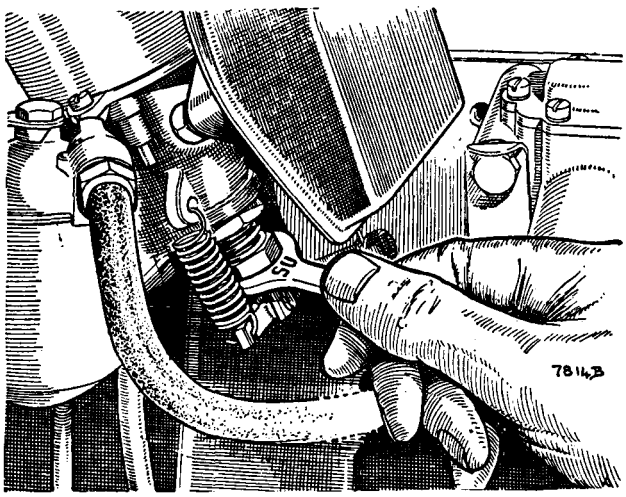

Fig. BBB.1
Adjusting the jet (see Section B.9)

Section BBB.2

OIL BATH AIR CLEANER

An oil bath air cleaner of the A.C. type is fitted to all earlier models.

Most of the dust and dirt suspended in the ingoing air is precipitated into the oil in the bottom of the cleaner when the air stream reverses above the oil shelf and settles in the bottom of the oil sump as sludge. Subsequently a cleaning operation also takes place as the partly cleaned air is drawn upwards through the woven metallic mesh.

The filter element is automatically oiled and washed by oil picked up from the shelf by the incoming air.

Cleaning and re-oiling

The cleaner should be cleaned and filled with new oil at the specified intervals, or more frequently if inspection shows this to be necessary.

Wash the filter element in a bowl of paraffin (kerosene) and allow it to drain and dry **thoroughly.**

Lift out the oil container, empty the oil, and scrape out the accumulated sludge. Wash the entire oil container in paraffin (kerosene) and fill to the level with engine oil. It is not necessary to re-oil the filter element; it is done automatically as soon as the engine starts up.

Make sure that the cork gasket is in good condition and reassemble the cleaner.

Section BBB.3

DRY-TYPE AIR CLEANER
(9M Engines)

A dry-type air cleaner has superseded the oil bath type of air cleaner on all Home models of the Minor 1000 and subsequently on all Export models. The new air cleaner was fitted from Car Nos. 698137 and 693918 (Traveller) for the Home market and from Car No. 720666 (all models) for the Export market.

To suit both the oil bath and dry types of air cleaner, carburetters were fitted with a different needle having the designation 'M'. The 'BX1' needle employed previously is not suitable for use with the dry-type air cleaner, though the 'M' needle may be used in conjunction with an oil bath air cleaner. This modification was incorporated on the following engines:

9M–U–H284925 to 285000 and 285091 onwards.

9M–U–L282078 to 282100 and 282680 onwards.

Maintenance attention required by the dry-type air cleaner differs from that recommended for the oil bath air cleaner used previously.

At the specified intervals renew the element.

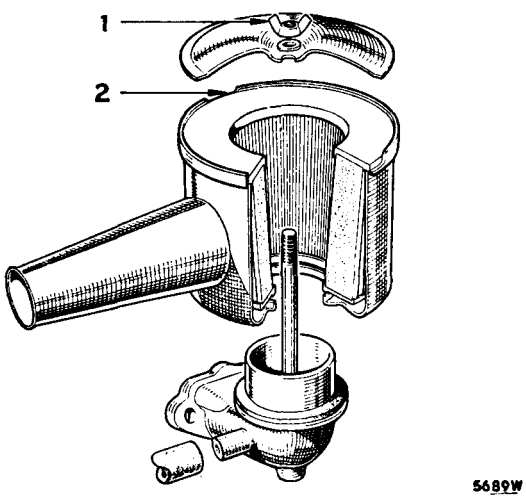

Fig. BBB.2
The component parts of the dry-type air cleaner (9M Engines)

1. Cover-securing wing nut.
2. Cleaner body cut-out.

THE MORRIS MINOR 1000 OIL BATH AIR CLEANER COMPONENTS

No.	*Description*
11.	Pipe—air.
12.	Sleeve—rubber.
13.	Clip.
14.	Pipe—breather.
15.	Stud—pipe to air cleaner.
16.	Spring washer—stud.
17.	Steady bracket—air cleaner.
19.	Bush—rubber—steady bracket.
20.	Spring washer—steady bracket to adaptor.
21.	Nut—steady bracket to adaptor.
22.	Plain washer—adjusting.
23.	Plain washer—steady bracket to adaptor.
24.	Gasket—air pipe to carburetter.
25.	Screw—air pipe to carburetter.
26.	Spring washer—screw.
27.	Adaptor—cylinder head.
28.	Cleaner—air.
29.	Cover.
30.	Container—oil.
31.	Chamber—silencer.
32.	Wing stud.
33.	Spring washer—stud.

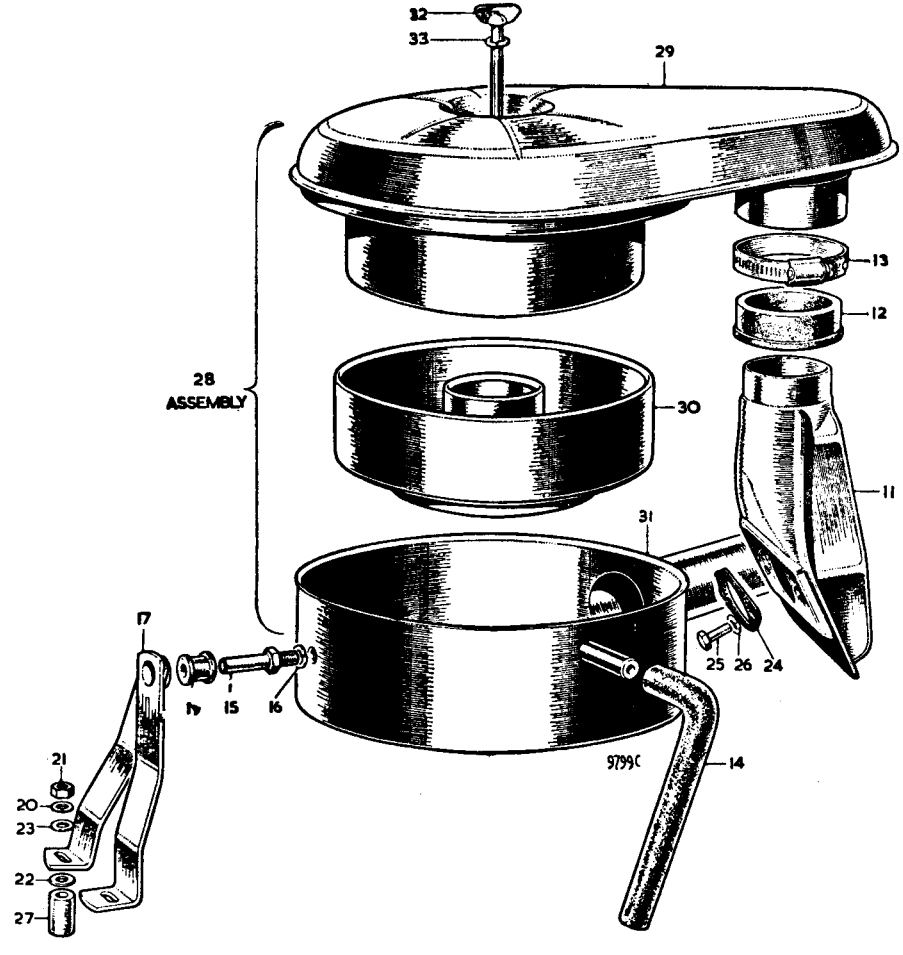

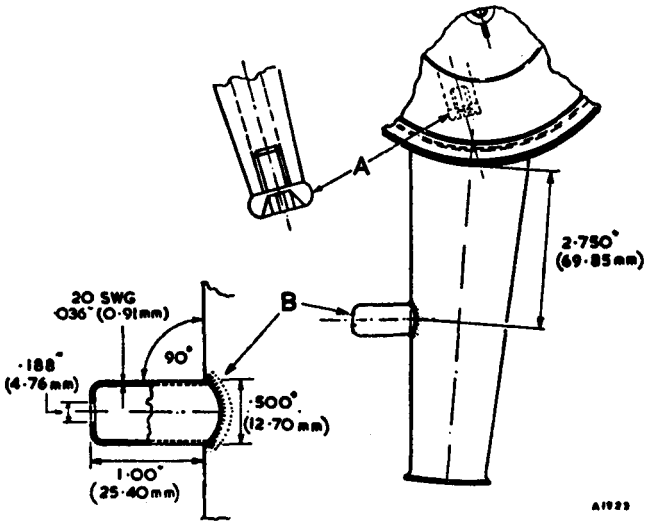

Fig. BBB.3

Alternative position for breather nozzle (9M Engines)

To remove the paper element (see Fig. BBB.2) unscrew the wing nut (1) on the top of the cleaner and lift the assembly from the induction pipe. Prise the cover from the cleaner body with a screwdriver inserted into one of the two cut-outs (2), remove the cover, and lift out the element.

Section BBB.4

PREVENTING CARBURETTER FROM FREEZING (9M Engines)

Under very low temperature conditions water vapour passing from the rocker cover to the air cleaner can condense and form ice in the carburetter. This trouble can be overcome by trapping the vapour in the air cleaner element in the following way.

Remove the pipe between the rocker cover and the air cleaner elbow, and plug connection (A) with a screw (Fig. BBB.3). A suitable screw is PMZ 0406 $\frac{1}{4}$ in. × $\frac{3}{8}$ in. UNF. pan head.

Drill a $\frac{17}{32}$ in. (13·49 mm.) dia. hole in the air cleaner intake at the position (B) (Fig. BBB.3), make a restricted inlet nozzle of 20 S.W.G. (9·10 mm.) material to the dimensions shown, and silver-solder into the hole. Cut off the original rubber breather pipe to the requisite length and refit it between the rocker cover and the nozzle (B).

Section BBB.5

DRY-TYPE AIR CLEANER (10MA Engines)

Removing

To remove the element, unscrew the wing nut from the top of the cleaner, remove the body, and extract the element. Collect the base and rubber washer, remove the screws securing the air cleaner tie-rod casting to the carburetter body, and lift away the tie-rod casting and joint washer.

Refitting

Reverse the removal procedure.

Fit a new element at the specified intervals, or more frequently in dusty operating conditions. Do not disturb the air cleaner body or remove the element at any other time.

NOTE.—**The air cleaner intake should be positioned adjacent to the exhaust manifold during winter operating conditions in order that the possibility of carburetter icing is reduced to the minimum. It is advisable to move the intake away from the manifold in warmer weather.**

Section BBB.6

HS2 CARBURETTER

Description

The HS2 carburetter is of the automatically expanding choke type in which the size of the main air passage (or

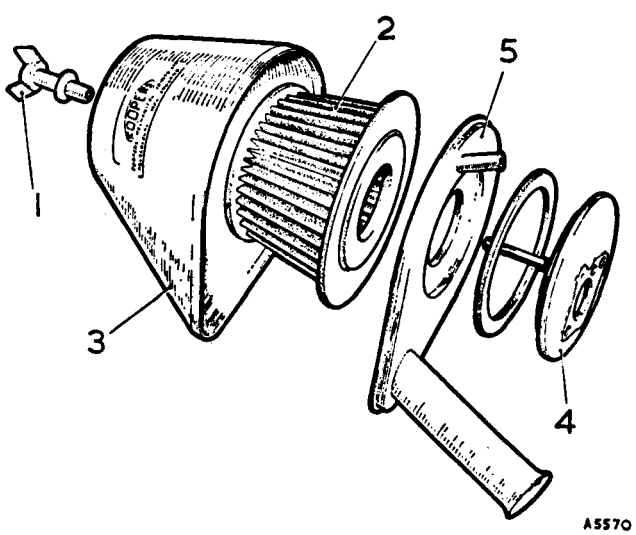

Fig. BBB.4

Dry-type air cleaner (10MA Engines)

1. Wing nut.
2. Element.
3. Body.
4. Casting and tie-rod.
5. Base and venturi.

choke) over the jet, and the effective area of the jet, are variable according to the degree of throttle opening used on the engine against the prevailing road conditions (which may differ widely from light cruising to heavy pulling).

Therefore, to serve the complete throttle range a single jet only is used, being a simple metal tube sliding in a single bearing bush, fed by fuel along a small-diameter nylon tube leading direct from the base of the float-chamber. The jet is varied in effective area by a tapered fuel metering needle sliding into it.

The HS2 carburetter is of improved design, and is fitted to the Minor 1000 and Traveller 1000 from Engine Nos. 9M-U-H353564 to 9M-U-H353600, 9M-U-L351279 to 9M-U-L351300, and 9M-U-H353642 and 9M-U-L353449 on. Modifications to the accelerator cable, throttle return spring, mixture control, and ignition control pipe are entailed, and the HS2 carburetter is not readily interchangeable with the earlier type, except in complete sets of components.

Maintenance and adjustments are as previously described in Sections B.8 to B.11, with the following exceptions.

Mixture control and throttle interlinkage adjustment

Pull out the mixture-control knob on the fascia (a minimum of ¼ in. or 6 mm.) until the linkage is about to move the carburetter jet and adjust the fast-idle cam screw to give an engine speed of about 1,000 r.p.m. when hot.

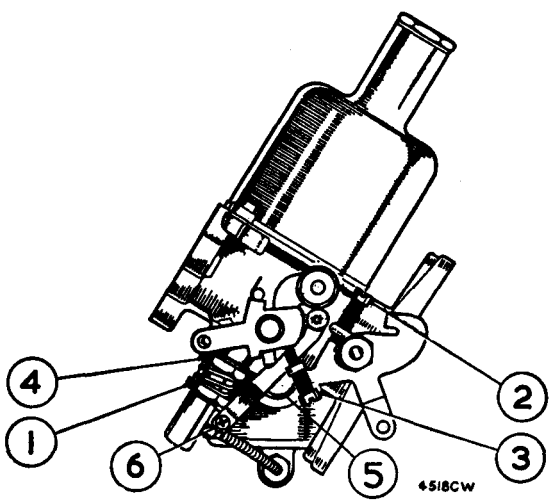

Fig. BBB.5

The HS2 carburetter

1. Jet adjusting nut.
2. Throttle stop screw.
3. Fast-idle adjusting screw.
4. Jet locking nut.
5. Float-chamber securing bolt.
6. Jet link securing screw.

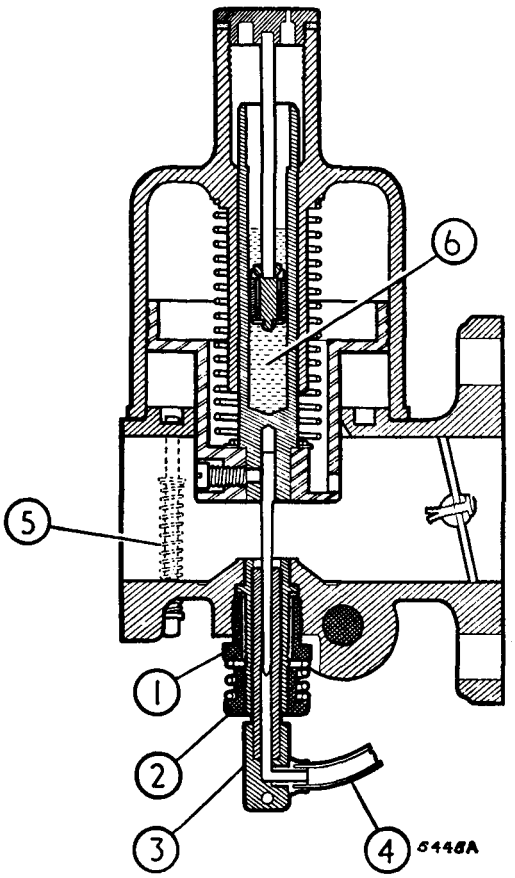

Fig. BBB.6

A section through the HS2 carburetter, showing:

1. Jet locking nut.
2. Jet adjusting nut.
3. Jet head.
4. Nylon fuel pipe.
5. Piston lifting pin.
6. Piston damper oil well.

Centring the jet

When the suction piston is lifted by the spring-loaded piston lifting pin it should fall freely and hit the inside jet bridge with a soft, metallic click—that is, with the jet adjusting nut (2) (Fig. BBB.6) in its topmost position.

If this click is not audible, but is so when the test is repeated with the jet in the fully lowered position, then the jet unit requires recentring on the needle, as described below.

(1) Disconnect the link between the jet lever and the jet head by removing the screw (6, Fig. BBB.5).

(2) Unscrew the union holding the nylon feed tube into the base of the float-chamber, and withdraw the tube and jet together. Unscrew the jet adjusting nut and remove the lock spring. Replace the adjusting nut and screw it right up to its topmost position, then replace the jet and feed tube.

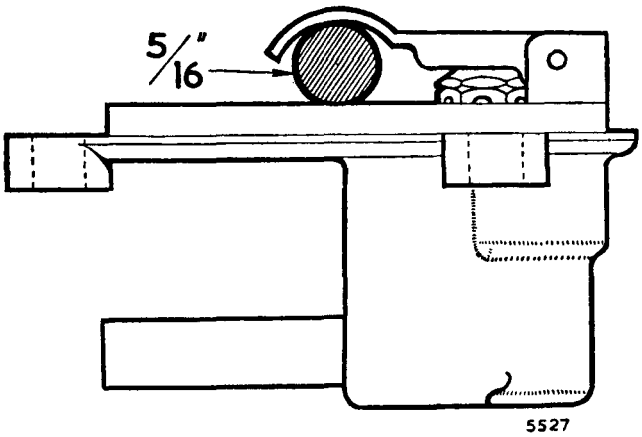

Fig. BBB.7

The method of checking the correct adjustment of the float lever (9M Engines)

(3) Slacken off the large jet locking nut (1, Fig. BBB.6) until the jet bearing is just free to rotate by finger pressure.

(4) With the damper removed and using a pencil on top of the piston rod, gently press the piston and needle down onto the jet bridge.

(5) Tighten the jet locking screw, observing that the jet head is still in its correct angular position.

(6) Lift the piston and check that it falls freely and evenly, hitting the jet bridge with a soft, metallic click. Then fully lower the jet and re-check to see if there is any difference in the sound of the impact; if there is and the second test produces a sharper impact sound, the centring operation will have to be repeated until successful, the nut and lock spring being replaced after the conclusion of the operation.

Float-chamber (9M Engines)

The position of the float lever in the float-chamber must be such that the level of the float (and therefore the height of the fuel at the jet) is correct.

This is checked by inserting a $\frac{5}{16}$ in. (7·94 mm.) round bar between the float lever and the machined lip of the float-chamber lid. The forked end of the lever should just rest on the bar (see Fig. BBB.7) when the needle is on its seating. If this is not so, the lever should be reset at the point where the forked end meets the shank.

Do not bend the shank, which must be perfectly flat and at right angles to the needle when it is on its seating.

Float-chamber (10MA Engines)

To check the float level hold the float-chamber lid and float assembly upside-down and place a $\frac{1}{8}$ in. (3·18 mm.) diameter bar across the diameter of the machined lip of the float-chamber lid parallel to the float lever hinge pin and under the float lever. The face of the float lever should just rest on the bar when the float needle is fully on its seating. If this is not so, carefully reset the angle made between the straight portion of the float lever and its hinge until the correct position is obtained.

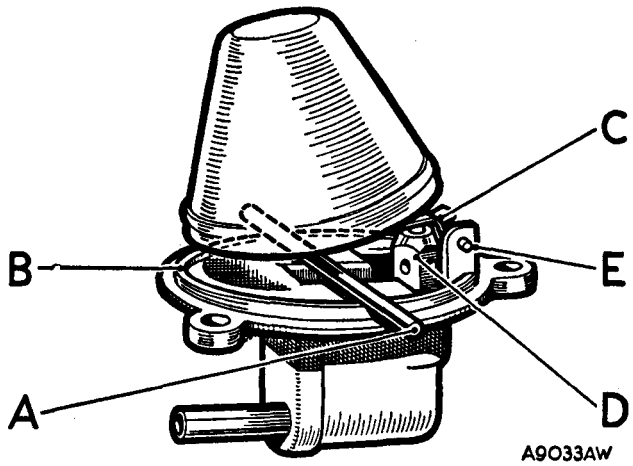

Fig. BBB.8

The method of checking the correct adjustment of the float lever (10MA Engines)

A. $\frac{1}{8}$ in. (3·18 mm.) bar.
B. Machined lip.
C. Angle of float lever.
D. Float needle and seat assembly.
E. Lever hinge pin.

Section BBB. 7

INDUCTION AND CARBURETTER SUCTION CHAMBER HEATERS

Heaters are fitted between the carburetter and the induction manifold and to the carburetter suction chamber on models exported to countries where conditions of extreme cold exist.

The induction heater is fitted with the bulb of the thermostat pointing inwards towards the centre-line of the engine and the insulating washer against the manifold. Earth return is through a small cut-away in the insulating washer, and contact is made against the manifold flange. The accelerator cable abutment plate is interposed between the heater and the carburetter with an insulating washer on each side of the plate.

The carburetter suction chamber heater is fitted on the outside of the suction chamber and secured in position by a retaining clip. The lead is connected to the thermostat on the induction heater.

SECTION C

THE IGNITION SYSTEM
OF THE MORRIS MINOR (Series MM)

Description and specification of equipment.

GENERAL DESCRIPTION

The ignition equipment is of the coil type and is provided with automatic advance mechanism which relieves the driver of the necessity of adjusting the timing. Its advantages are particularly evident when accelerating and during hill climbing, since the danger of knocking or pinking through excessive advance is very much reduced.

The automatic advance device is housed in the distributor unit, and it consists of a centrifugally operated mechanism by means of which the ignition is advanced in proportion to the engine speed.

Like the rest of the electrical equipment, it is wired on the positive earth system, which results in longer sparking plug life.

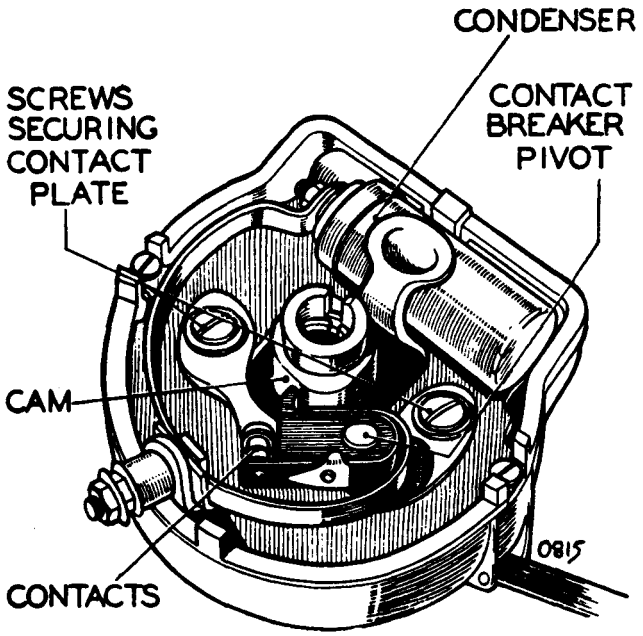

Fig. C.1

The distributor with the cover and rotor arm removed, showing its components

Distributor type

The distributor is a Lucas Model DKYH4A, Service No. 40056, on early models. These identification marks are stamped on the side of the distributor. When ordering replacements always quote these numbers.

Later models are fitted with a distributor with a high-lift cam bearing Type No. D2AH4/A176 and Service No. 40333 (see Section C.14).

Ignition coil type

The coil is a Lucas Model Q12, Service No. 45020. These identification marks are stamped on the base of the ignition coil. When ordering always quote these numbers.

Sparking plugs

The standard sparking plugs for the Morris Minor (Series MM) are Champion L10, 14 mm., ½ in. reach.

Section C.1

LOCATING THE CAUSE OF UNEVEN FIRING

To test with sparking plugs in position

(1) Start the engine and set it to run at a fairly fast idling speed.

(2) Short-circuit each plug in turn by placing a hammer head or the blade of a screwdriver with a wooden or insulated handle between the terminal and the cylinder head. No difference in the engine performance will be noted when short-circuiting the plug in the defective cylinder. Shorting the other plugs will make uneven running more pronounced.

(3) Having located the cylinder which is at fault, stop the engine and remove the cable from the terminal of the sparking plug. Restart the engine and hold the end of the cable about $\frac{3}{16}$ in. (4·8 mm.) from the cylinder head.

(4) If the sparking is strong and regular the fault probably lies in the sparking plug. Remove the plug, clean it, and adjust the gap to the correct setting, or alternatively fit a replacement plug. See Section C.4.

(5) If there is no spark, or if it is weak and irregular, examine the cable from the sparking plug to the distributor. After a long period of service the rubber insulation may be cracked or perished, in which case the cable should be renewed. Finally, examine the distributor moulded cap, wipe the inside and outside with a clean dry cloth, see that the carbon brush moves freely in its holder, and examine the moulding closely for signs of breakdown. After long service it may have become tracked, that is, a conducting path may have formed between two or more of the electrodes or between one of the electrodes and some part of the distributor in contact with the cap. Evidence of a tracked cap is shown by the presence of a thin black line in the places indicated. A replacement distributor cap must be fitted in place of one that has become tracked.

Section C.2

TESTING THE LOW-TENSION CIRCUIT

Testing in position

(1) Spring back the securing clips on the distributor and remove the moulded cap and rotor. If the

rotor is a tight fit it can be levered off carefully with a screwdriver.

(2) Check that the contacts are clean and free from pits, burns, oil, or grease. Turn the engine and check that the contacts are opening and closing correctly and that the clearance when the contacts are fully opened is between ·010 and ·012 in. (·25 and ·30 mm.) or ·014 and ·016 in. (·36 and ·40 mm.), according to the distributor fitted. Correct the gap if necessary.

Disconnect the cable at the contact breaker terminal 'CB' of the coil and at the low-tension terminal of the distributor and connect a test lamp between these terminals. If the lamp lights when the contacts close and goes out when the contacts open, the low-tension circuit is in order.

To locate fault

(1) Having determined, by testing as previously described, that the fault lies in the low-tension circuit, switch on the ignition and turn the engine until the contact breaker points are fully opened.

(2) Refer to the wiring diagram and check the circuit with a voltmeter (0–20 volts) as follows.

NOTE.—If the circuit is in order the reading on the voltmeter should be approximately 12 volts.

(3) *Battery to starter switch.* Connect a voltmeter between the starter terminal and a good earthing point. No reading indicates a damaged cable or loose connections.

(4) *Starter switch to control box terminal 'A'* (brown lead). Connect a voltmeter to the control box terminal 'A' and to earth. No reading indicates a damaged cable or loose connections.

(5) *Control box.* Connect a voltmeter to the control box terminal 'A1' and to earth. No reading indicates a broken or loose connection.

(6) *Control box terminal 'A1' and feed terminal of the lighting switch* (brown with blue lead). Connect a voltmeter to the feed terminal of the lighting switch and to earth. No reading indicates a damaged cable or loose connections.

(7) *Lighting switch feed terminal to terminal on ignition switch* (brown with blue). Connect a voltmeter to the ignition switch terminal and to earth. No reading indicates a damaged cable or loose connections.

(8) *Ignition switch.* Connect a voltmeter to the other ignition switch terminal and to earth. No reading indicates a fault in the ignition switch.

(9) *Ignition switch to control box terminal 'A3'* (white lead). Connect the voltmeter to the control box terminal 'A3' and to earth. No reading indicates a damaged cable or loose connections.

(10) *Control box terminal 'A3' to ignition coil terminal 'SW'* (white lead). Connect a voltmeter to the ignition coil terminal 'SW' and to earth. No reading indicates a damaged cable or loose connections.

(11) *Ignition coil.* Disconnect the cable from the 'CB' terminal of the ignition coil and connect a voltmeter to this terminal and to earth. No reading indicates a fault in the primary winding of the coil and a replacement coil must be fitted. If the correct reading is given remake the connections to the coil terminal.

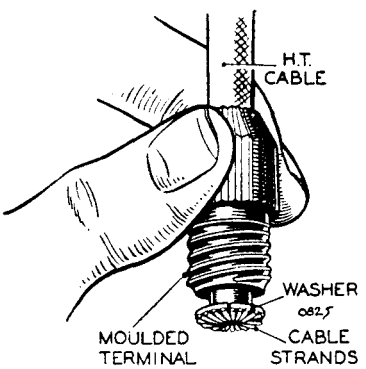

Fig. C.2

Demonstrates the correct method of fitting the high-tension cable to the moulded terminal of the ignition coil

(12) *Ignition coil to distributor* (white with black lead). Disconnect the cable from the low-tension terminal on the distributor and connect the voltmeter to the end of this cable and to earth. No reading indicates a damaged cable or loose connections.

(13) *Contact breaker and condenser.* Connect the voltmeter across the contact breaker points. No reading indicates a fault in the condenser.

Section C.3

HIGH-TENSION CABLES

(1) The high-tension cables must be examined carefully and any which have the insulation cracked, perished, or damaged in any way must be replaced.

(2) To fit the cable to the terminal of the ignition coil thread the knurled moulded terminal over the lead, bare the end of the cable for about ¼ in. (6 mm.), thread the wire through the brass washer removed from the original cable, and bend back the strands over the washer. Finally, screw into its terminal.

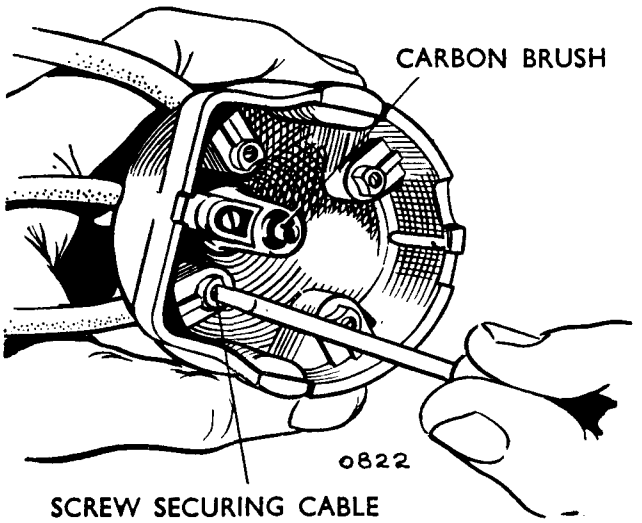

Fig. C.3

Pointed fixing screws secure the high-tension cables to the distributor pick-up segments

To make the connections to the terminals in the distributor moulded cap first remove the cap and slacken the screws on the inside of the moulding till they are clear of the cables. Cut the new cables off to the required length, fill the holes in the distributor cap with Silicone grease, and push the cables fully home. Tighten the fixing screws.

(3) The cables from the distributor to the sparking plugs must be connected up in the correct firing order, which is 1, 3, 4, 2.

Section C.4

ATTENTION TO SPARKING PLUGS

To obtain the best engine performance and most economical running the sparking plugs must be kept clean and correctly adjusted.

Inspect, clean, adjust, and renew sparking plugs at the recommended mileage intervals.

When removing plugs note the condition of their gaskets. A large proportion of the heat from the insulator is dissipated to the cylinder head by means of the gasket between the plug and the cylinder head. Plugs not screwed down tight become overheated, causing pre-ignition, short plug life, and 'pinking'. The plug leads should be numbered before they are disconnected from the plug terminals so that they can easily be replaced in the correct positions.

Plug inspection

After removal of the plug the condition of the electrodes and deposits on the insulator and plug body should be examined.

(1) If the insulator is brown in colour, the electrodes grey, and the plug body dry or covered with a thin layer of soot the engine condition and mixture strength are satisfactory.

(2) A dry, greyish-yellow or brown insulator with a thin layer of light-fawn powder deposit indicates the use of a leaded fuel or a rich mixture.

(3) When the insulator is dry and fawn or white in colour and the electrodes are corroded and burnt at the tips the plug temperature is too high. This is caused either through the use of an unsuitable plug, by a weak mixture, or by high combustion temperatures.

(4) Soot deposits, forming a black velvety coating on the insulator and plug body, show that the plug does not reach a self-cleansing temperature. This may be due to a mixture which is too rich, but if the deposit is wet it indicates that oil is also reaching the combustion space in excessive quantities. Correct operation may be restored by adjusting the mixture, but an overhaul of the engine is necessary to reduce the amount of oil passing the piston.

(5) After cleaning, examine the plugs for cracked insulators and the lower end for wear produced through previous cleaning.

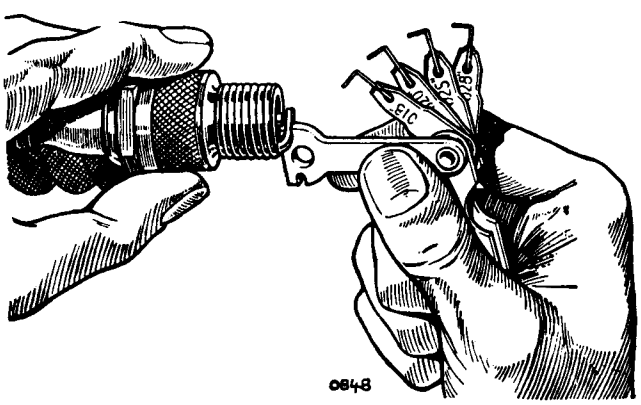

Fig. C.4

Adjustments to the spark plug gap should be made only by bending the side wire, preferably with a Champion setting tool as shown here

Whenever possible, sparking plugs should be cleaned in a special plug cleaner of the type supplied by the plug manufacturer. Oily plugs should be washed with petrol first. A compressed-air jet should then be used to remove any abrasive from the interior of the plug body and the insulator. If a plug cleaner is not available a wire brush is the best substitute. This should also be used to clean any accumulation of carbon from the threads.

Having ensured that the plug is thoroughly clean and still serviceable, the electrodes should be reset. A combination gauge and setting tool produced by the makers of Champion sparking plugs greatly facilitates the correct and easy setting of the sparking plug points, but care should be taken to avoid a false reading through distortion of the points.

When resetting the points the side electrode only should be adjusted to give the correct clearance. **Never bend the centre electrode.**

Fig. C.5

The Champion L10 14 mm. sparking plug, reach ½ in., which is the standard equipment for the Morris Minor (Series MM)

Champion L10 plugs are fitted as standard and their spark gap should be set correctly (see **'GENERAL DATA'**).

Since each engine design has its own particular working temperature and pressure inside the cylinder, it is essential that only sparking plugs recommended by Morris Motors Ltd. be used. A plug designed for a hot, dry engine will not function satisfactorily in relatively cool, oily engines as it will constantly oil up and cause trouble. On the other hand, a plug suitable for the oily engine will not function in the hot type of engine as the points will overheat and cause pre-ignition.

The threaded portion or 'reach' of the plug is also important since it determines the position of the points in the combustion chamber and may produce pre-ignition if the threads on the plug body protrude beyond the cylinder head.

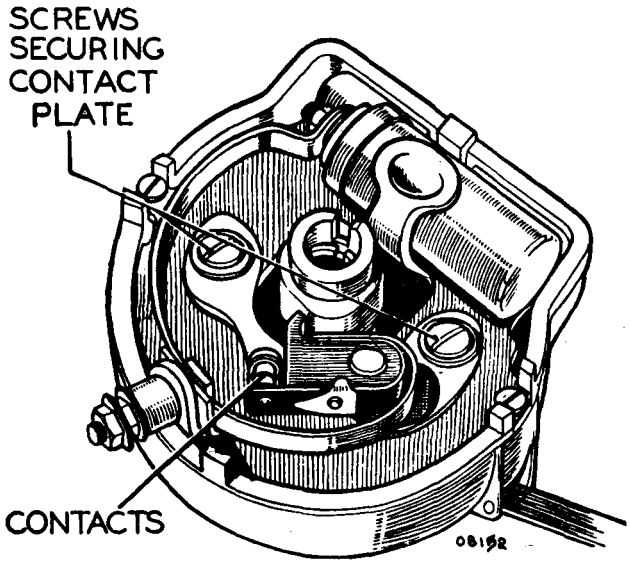

Fig. C.6

The contact breaker, showing the adjustment screws

Section C.5

CONTACT BREAKER MECHANISM

At the specified intervals check the contact breaker as follows:

(1) Turn the engine until the contact breaker points are fully opened and check the gap with a gauge

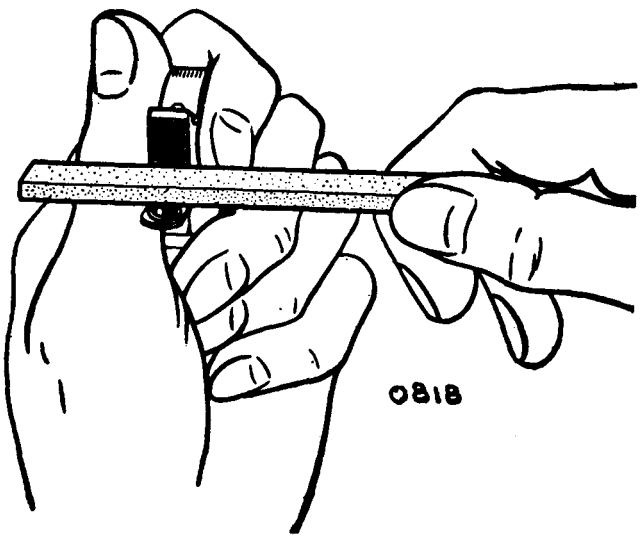

Fig. C.7

Cleaning the contact breaker points with a stick of carborundum

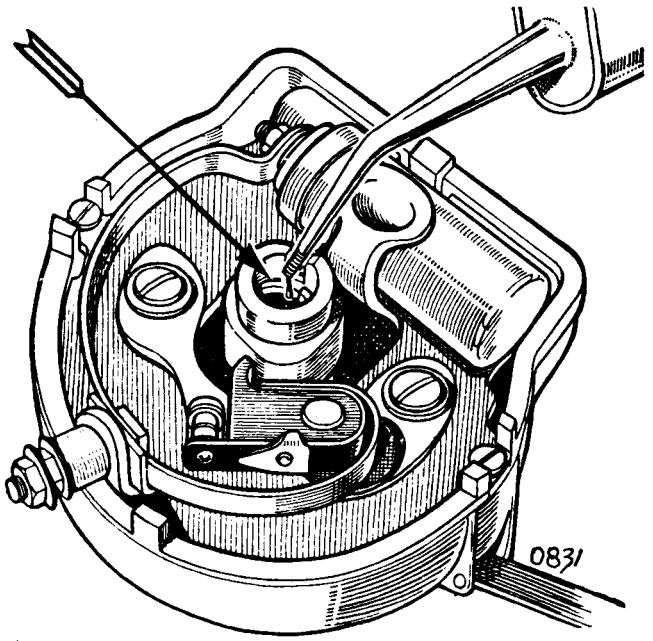

Fig. C.8

The cam bearing is lubricated through the opening revealed when the distributor rotating arm is withdrawn. Thin machine oil should be used

having a thickness of from ·010 to ·012 in. (·25 to ·30 mm.) or ·014 to ·016 in. (·36 to ·40 mm.), according to the distributor fitted. If the gap is correct the gauge should be a sliding fit. Do not alter the setting unless the gap varies considerably from the gauge thickness.

To adjust the setting keep the engine in the position which gives maximum opening of the contacts and then slacken the two screws securing the fixed contact plate. Adjust the position of the plate until the gap is set to the thickness of the gauge and then tighten the two locking screws.

Remember that the cam only keeps the contact points fully open over 10° and that care must be taken to ensure that the points are in the fully open position.

(2) If the contacts are dirty or pitted they must be cleaned by polishing them with a fine carborundum stone and afterwards wiping them with a petrol-moistened cloth. The moving contact can be removed from its mounting in order to assist cleaning (see Fig. C.7). Check and adjust the contact breaker setting after cleaning the contacts.

(3) Check that the moving arm moves freely on its pivot. If it is sluggish remove the moving arm and polish the pivot pin with a strip of fine emery-cloth. Afterwards clean off all trace of emery dust and apply a spot of clean engine oil to the top of the pivot.

The contact breaker spring tension should be between 20 and 24 oz. (567 and 680 gm.) measured at the contacts.

Section C.6

DISTRIBUTOR LUBRICATION

To be carried out after servicing the distributor and at the specified intervals.

(1) Give the cam a light smear of grease to Ref. D (page P.2) and apply a slight trace of oil to the top of the contact breaker lever pivot pin.

(2) Lift the rotor arm off the top of the spindle and add a few drops of thin machine oil through the lubricating passage provided in the spindle to lubricate the cam bearing and distributor shaft. (Do not remove the screw in the top of the spindle as an oilway is provided.) Refit the rotor correctly, and push it on the shaft as far as it will go.

(3) Add a few drops of engine oil to Ref. F (page P.2) through the hole in the contact breaker base through which the cam passes in order to lubricate the automatic timing control. Do not allow any oil to get on or near the contacts.

Section C.7

REMOVAL AND REPLACEMENT OF THE DISTRIBUTOR

The distributor on early models can be removed and replaced without interfering with the ignition timing,

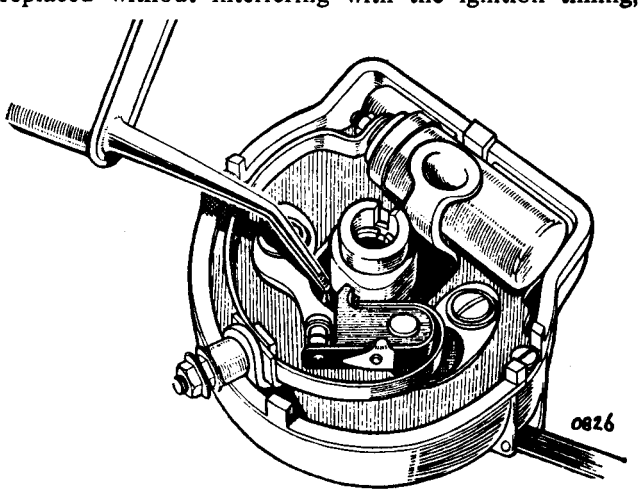

Fig. C.9

The advance control mechanism is lubricated through the aperture round the cam spindle. Take care that no oil finds its way onto the contact points

provided the clamp plate pinch-bolt is not disturbed. Later models with cotter bolt attachment must first be marked and then dealt with in the manner indicated in Section C.13.

To facilitate the replacement of the distributor turn the engine over until the rotor arm is pointing to the segment in the cover for No. 1 cylinder plug lead to provide a datum for replacement.

Remove the distributor cover and disconnect the low-tension lead from the 2 B.A. terminal on the distributor.

Extract the lock wire from the dowel bolt locating the distributor clamp plate to the cylinder head on early models and remove the bolt. In the case of later models slacken the cotter bolt nut and gently tap back the cotter to release the distributor.

To replace the distributor insert it into the cylinder head until the driving dog rests on the distributor drive shaft. The rotor arm should then be rotated slowly until the driving dog lugs engage with the drive shaft slots, both of which are offset to ensure correct replacement. The remainder of the assembly is now in the reverse order to that of removal.

NOTE.—Provided that the engine has not been turned, the rotor arm will be opposite the segment for No. 1 plug lead. The high-tension leads can then be replaced on their respective plug terminals in the order of firing, i.e. 1, 3, 4, 2, remembering that the distributor rotation is anti-clockwise.

The firing angles are 0°, 90°, 180°, and 270°.

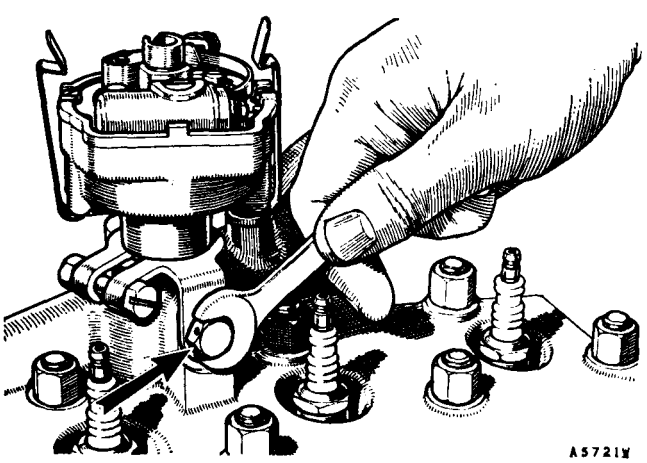

Fig. C.10

The distributor can be withdrawn on early models after removing the retaining bolt indicated. Later models are retained by a cotter bolt the nut of which must be loosened and the cotter tapped back to release the distributor (see Section C.13)

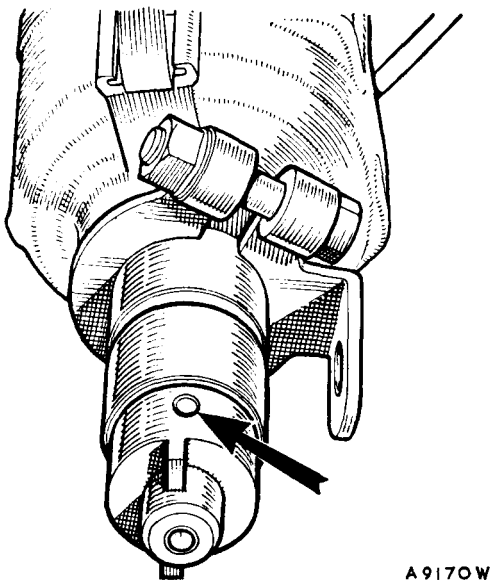

Fig. C.11

The parallel driving pin locating the driving collar to the contact breaker spindle is here shown, together with the offset driving tongue

Section C.8

IGNITION TIMING

The ignition timing varies according to the condition of the engine and the fuel used and can only be determined by actual road test.

When setting the ignition timing commence by setting the ignition so that the spark occurs at T.D.C. or just before T.D.C. Then gradually increase the amount of advance until the engine just shows signs of 'pinking' when given full throttle in top gear on a normal steep incline. This is the correct setting.

To set the distributor in the correct position for firing if the timing has been lost the following procedure should be followed:

(1) Turn the engine until No. 1 piston is at T.D.C. on its compression stroke. This can best be effected by turning the engine and observing the valves. When the valves are 'rocking' (i.e. exhaust just closing and inlet just opening) on No. 4 cylinder No. 1 piston is approximately at T.D.C. on its compression stroke. If the engine is now rotated until the groove in the crankshaft pulley is in line with the pointer on the timing cover the piston is exactly at T.D.C. (see Fig. A.23).

(2) Set the contact breaker points to ·010 to ·012 in. (·25 to ·30 mm.) or ·014 to ·016 in. (·36 to ·40 mm.), whichever applies, when in their maximum open position.

(3) Insert the distributor into its housing and engage the drive dog lugs with the drive shaft slots (both of which are offset) by slowly rotating the rotor arm.
(4) Screw in the dowel bolt locating the distributor clamp plate to the cylinder head on early models and secure the bolt with locking wire.
(5) Position the distributor so that the flat side of the body is facing, and parallel to, the sparking plugs.
(6) Rotate the distributor body anti-clockwise until the points are fully closed. Then slowly rotate it in a clockwise direction until the points just commence to open. Secure the distributor body in this position by tightening up the clamp plate pinch-bolt and nut on early models or the cotter bolt on later models. Finally, check that the rotor arm is opposite the correct segment for the cylinder which is at the top of its compression stroke.

IMPORTANT.—To obtain an accurate setting an electrical method should be used to determine the actual position at which the points break, and the following method can be used.

With the low-tension lead connected to the distributor, turn on the ignition switch and connect a 12-volt lamp in parallel with the contact breaker points (i.e. one lead from the distributor low-tension terminal, and the other to earth) and turn the distributor as detailed in paragraph (6) until the lamp lights, which indicates that the points have just opened.

If a stroboscopic lamp is used, do not allow the engine r.p.m. to rise high enough to operate the centrifugal advance weights.

NOTE.—If the distributor drive gear assembly has been removed from the engine it should be refitted in accordance with instructions given in the last sub-section of Section A.19, and the above operation should then be carried out.

Section C.9

DISMANTLING THE DISTRIBUTOR

Before dismantling carefully note the positions in which the various components are fitted so that they can be replaced correctly.

(1) Spring back the securing clips and remove the moulded cap.
(2) Lift the rotor off the top of the spindle. If it is a tight fit it should be levered off carefully with a screwdriver.
(3) Slacken the nut on the terminal post and lift off the end of the contact breaker spring, which is slotted to assist removal. Lift the contact breaker lever off its pivot pin. Take out the two screws, complete with spring washers and flat steel washers, from the plate carrying the fixed contact and remove the plate.
(4) Undo the two screws fitted at the edge of the contact breaker base and lift them out together with the spring washers. The contact breaker base can then be removed from the body of the distributor.
(5) Unscrew the condenser terminal nut, lift off the spring washer, and remove the connector strip. Soften the solder securing the condenser in its clip with a hot iron, and remove the condenser by applying pressure at one end.

NOTE.—The condenser should not be removed unless absolutely necessary.

(6) Drive out the parallel driving pin passing through the collar of the driving tongue member at the lower end of the spindle and withdraw the driving tongue from the spindle. Note that the driving tongue itself is offset and that the small offset is towards the front of the engine when the slot for the rotating arm faces the condenser in the distributor body.
(7) Lift the cam, automatic timing control, and shaft assembly from the distributor. Take out the screw from inside the top of the cam spindle and lift the cam off. The automatic timing control is then accessible.

Section C.10

CONDENSER

The best method of testing the condenser is by substitution. Disconnect the original condenser and connect a new one between the low-tension terminal of the distributor and earth.

Should a new condenser be necessary, it is advisable to fit a complete condenser and contact breaker plate assembly, but should a condenser only be available, use a hot iron to soften the solder securing the defective condenser in the clip and remove the condenser by applying pressure at one end. Care must be taken not to overheat the new condenser when soldering it in position.

The capacity of the condenser is 0·2 microfarad.

Section C.11

FITTING NEW DISTRIBUTOR BUSHES

(1) In order to ensure easy running of the distributor shaft when the shank has been rebushed the new bushes must be fitted so that they are in correct alignment. The bushes must be fitted by means of a vertical drilling machine or hand press, using a mandrel and a packing block of the type shown (Fig. C.12).

(2) Fit the mandrel in the drilling machine or hand press and place the distributor body in an inverted position on the table below it.
(3) To remove the bushes a sleeve must be fitted over the mandrel to build it up to the required size. With this sleeve fitted in position, force the old bushes out of the shank by applying a steady pressure. Before new bushes are fitted they should be allowed to soak for 24 hours in thin engine oil to Ref. F (page P.2).
(4) Take the sleeve off the mandrel. Place one of the longer bushes on the mandrel, then the distributor body in an inverted position, and finally one of the smaller bushes.
(5) Locate the end of the mandrel through the packing piece and press the mandrel downwards, taking care that both bushes enter the distributor shank squarely. Continue forcing the bushes into the shank until the mandrel reaches the end of its travel.

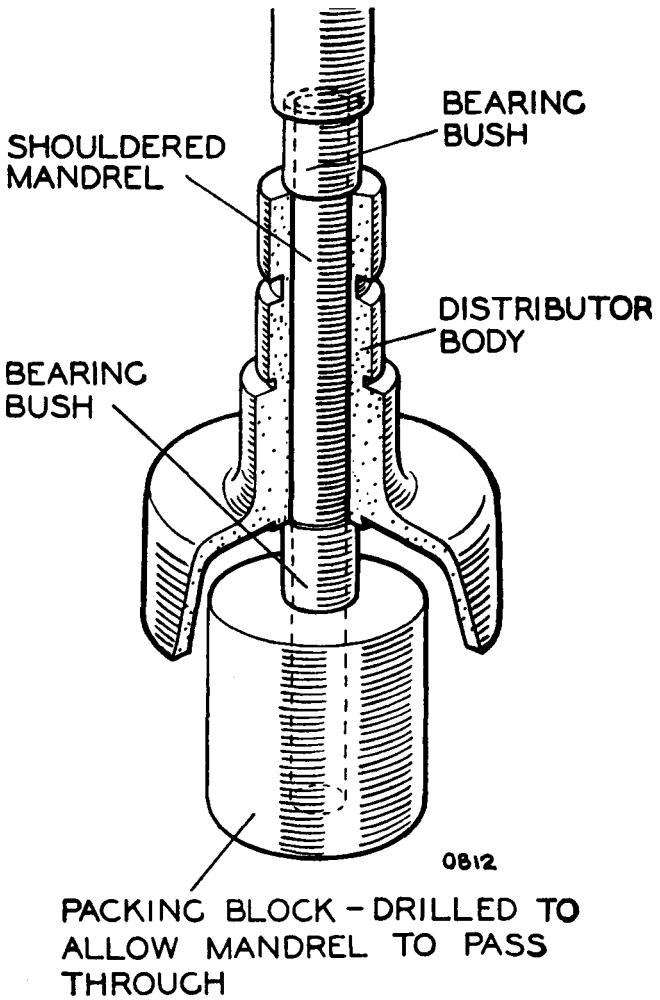

Fig. C.12
Replacement of bearing bushes

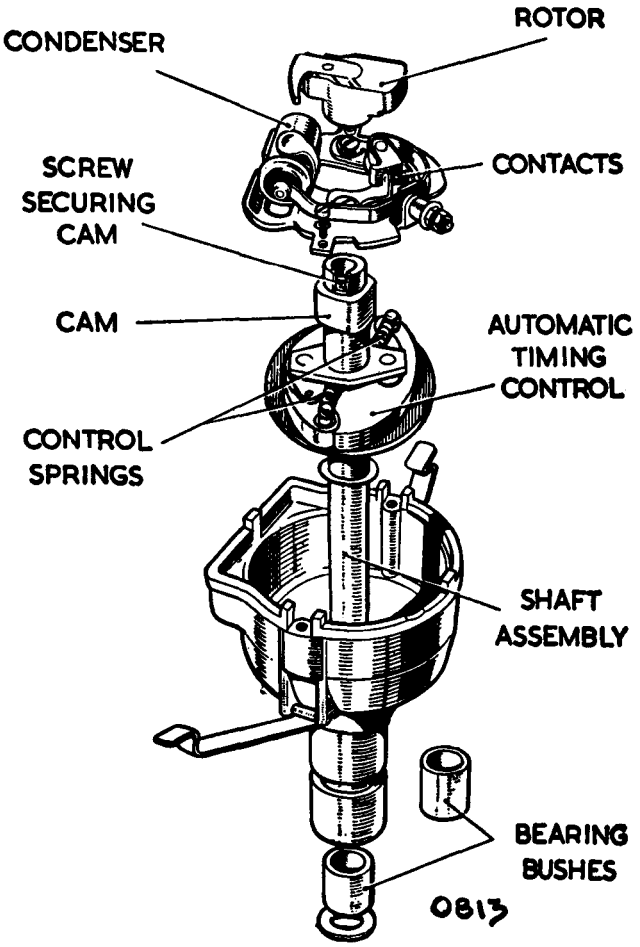

Fig. C.13
The component parts of the distributor on the Morris Minor (Series MM)

(6) After fitting, the bushes must not be opened out by reaming or any other means, as this would tend to impair the porosity of the bushes and so prevent effective lubrication being obtained.

Section C.12

REASSEMBLING THE DISTRIBUTOR

NOTE.—Before reassembly the automatic advance mechanism, distributor shaft, and the portion of the shaft on which the cam fits must be lubricated with thin, clean engine oil to Ref. F (page P.2).

(1) Assemble the automatic timing control, taking care that the parts are fitted in their original positions and that the control springs are not stretched. Two holes are provided in each toggle; the springs must be fitted to the inner hole in each case. Place the cam on its spindle and secure by tightening the locking screw.

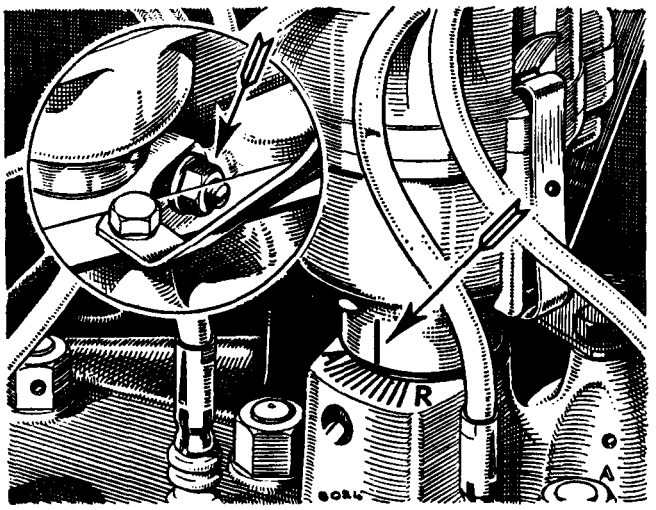

Fig. C.14

The later distributor mounting, showing the markings on the distributor body and the face of the mounting, and (inset) the nut of the cotter bolt which clamps the distributor in position

(2) Fit the shaft in its bearings and replace the driving member. Remembering that the small offset of the driving tongue lies towards the front of the engine when the slot for the rotating arm in the cam faces towards the centre of the engine (or towards the condenser in the distributor body). Fit the driving pin and with a suitable punch burr over the collar each side to retain it in position.

(3) Place the contact breaker base in position on the distributor body and secure it by replacing the two screws. A spring washer must be fitted under each of the screw heads, and the screws must be fully tightened.

(4) Place the end of the connector strip over the condenser terminal post, refit the spring washer, and secure it by tightening the terminal nut.

(5) Position the plate carrying the fixed contact on the contact breaker base and secure it by replacing and lightly tightening the two screws, placing a spring washer and flat steel washer under the heads of each of the screws. Place the insulating washer over the contact breaker pivot pin and position the contact breaker lever over the pivot pin. Locate the slotted end of the contact breaker spring under the head of the terminal screw and tighten the nut to lock the spring in position. Adjust the contact breaker setting to give a maximum opening of from ·010 to ·012 in. (·25 to ·30 mm.).

NOTE.—If it becomes necessary to renew the contacts a replacement set comprising fixed and moving contacts must be fitted.

(6) Place the rotor on the top of the spindle, locating the register correctly, and push it fully home.

(7) Fit the distributor moulding and secure it by means of the spring clips.

NOTE.—Later models are fitted with interference suppressors as standard. Contrary to popular belief, these suppressors have no adverse effect whatever on the ignition equipment.

Section C.13

LATER DISTRIBUTOR MOUNTING

On later models a new distributor mounting is employed which dispenses with the clamp plate for locating the distributor body. The later fixing consists of a cotter bolt which clamps the distributor body in its housing in the cylinder head, and datum marks are provided on the distributor body and the face of the cylinder head boss to facilitate timing.

To release this type of distributor it is first necessary to note the position of the vertical mark on the distributor body in relation to the radial scale on the face of the housing so that they can be replaced in the same position. The cotter nut should then be slackened a turn or two and the cotter gently tapped inwards to release the distributor, which can now be turned for adjustment of the ignition setting or completely removed if desired.

When replacing the distributor first make sure that the cut-away of the cotter bolt is in the position which will allow the distributor body to pass, and make sure that the same markings on the distributor body and housing coincide before tightening the cotter nut.

This will ensure correct timing, since the distributor drive tongue is offset and the two halves of the coupling can only be re-engaged in their correct relative positions.

It will, of course, be understood that the engine must on no account be turned while the cotter is loose without first making a note of the timing and retightening the cotter.

Fig. C.15

The three types of cam contour used on Lucas distributors, showing their appearance

Section C.14

HIGH-LIFT CAM

As a result of research it has been established that improved ignition characteristics are obtained by the combination of a high-lift cam and a wider gap for the contact breaker points.

All distributors bearing Lucas Service No. 40333 with the suffix 'A' and onwards are fitted with the high-lift cam contour and the contact breaker points on these should be set between ·014 and ·016 in. (·36 and ·40 mm.).

All distributors bearing Lucas Service No. 40251 with the suffix 'E' and onwards are also fitted with high-lift cams.

SECTION CC

THE IGNITION SYSTEM

OF THE MORRIS MINOR (Series II) AND MORRIS MINOR 1000

Description and specification of equipment.

GENERAL DESCRIPTION

The automatic advance device is housed in the distributor unit, and it consists of a centrifugally and vacuum-operated mechanism by means of which the ignition is advanced in proportion to the engine speed and load.

Like the rest of the electrical equipment, it is wired on the positive earth system, which results in longer sparking plug life.

Distributor type

The distributor is a Lucas Model DM2A4, Service No. 40299. These identification marks are stamped on the side of the distributor. When ordering replacements always quote these numbers.

Ignition coil type

The coil is a Lucas Model Q12, Service No. 45020. These identification marks are stamped on the base of the ignition coil. When ordering always quote these numbers. On later models a fluid-filled coil, Lucas Model LA12 (Part No. 2A536), is fitted as standard.

Sparking plugs

The standard sparking plugs for the Morris Minor (Series II) are Champion NA8, 14 mm., ¾ in. reach.

The correct points gap should be between ·020 and ·022 in. (·50 and ·56 mm.).

Section CC.1

LOCATING THE CAUSE OF UNEVEN FIRING

This is carried out in the same way as described in Section C.1.

Section CC.2

TESTING THE LOW-TENSION CIRCUIT

Testing in position

(1) Spring back the securing clips on the distributor and remove the moulded cap and rotor. If the rotor is a tight fit it can be levered off carefully with a screwdriver.

(2) Check that the contacts are clean and free from pits, burns, oil, or grease. Turn the engine and check that the contacts are opening and closing correctly and that the clearance when the contacts are fully opened is between ·014 and ·016 in. (·36 and ·40 mm.). Correct the gap if necessary.

(3) Disconnect the cable at the contact breaker terminal 'CB' of the coil and at the low-tension terminal of the distributor, and connect a test lamp between these terminals. If the lamp lights when the contacts close and goes out when the contacts open the low-tension circuit is in order.

To locate fault

(1) Having determined, by testing as previously described, that the fault lies in the low-tension circuit, switch on the ignition and turn the engine until the contact breaker points are fully opened.

(2) Refer to the wiring diagram and check the circuit with a voltmeter (0–20 volts) as follows.

NOTE.—If the circuit is in order the reading on the voltmeter should be approximately 12 volts.

(3) *Battery to starter switch.* Connect a voltmeter between the starter terminal and a good earthing point. No reading indicates a damaged cable or loose connections.

(4) *Starter switch to control box terminal 'A'* (brown lead). Connect a voltmeter to the control box terminal 'A' and to earth. No reading indicates a damaged cable or loose connections.

(5) *Control box.* Connect a voltmeter to the control box terminal 'A1' and to earth. No reading indicates a broken or loose connection.

(6) *Control box terminal 'A1' and feed terminal of the lighting switch* (brown with blue lead). Connect a voltmeter to the feed terminal of the lighting switch and to earth. No reading indicates a damaged cable or loose connections.

(7) *Lighting switch feed terminal to terminal on ignition switch* (brown with blue). Connect a voltmeter to the ignition switch terminal and to earth. No reading indicates a damaged cable or loose connections.

(8) *Ignition switch.* Connect a voltmeter to the other ignition switch terminal and to earth. No reading indicates a fault in the ignition switch.

(9) *Ignition switch to fusebox terminal 'A3'* (white lead). Connect the voltmeter to the fusebox terminal 'A3' and to earth. No reading indicates a damaged cable or loose connections.

(10) *Fusebox terminal 'A3' to ignition coil terminal 'SW'* (white lead). Connect a voltmeter to the ignition coil terminal 'SW' and to earth. No reading indicates a damaged cable or loose connections.

(11) *Ignition coil.* Disconnect the cable from the 'CB' terminal of the ignition coil and connect a voltmeter to this terminal and to earth. No reading indicates a fault in the primary winding of the coil and a replacement coil must be fitted. If the correct reading is given, remake the connections to the coil terminal.

(12) *Ignition coil to distributor* (white with black lead). Disconnect the cable from the low-tension terminal on the distributor and connect the voltmeter to the end of this cable and to earth. No reading indicates a damaged cable or loose connections.

(13) *Contact breaker and capacitor.* Connect the voltmeter across the contact breaker points. No reading indicates a fault in the capacitor.

Section CC.3

HIGH-TENSION CABLES

The high-tension cables must be examined carefully and any which have the insulation cracked, perished, or damaged in any way must be replaced.

To fit the cables to the terminal of the ignition coil or the distributor cap on earlier cars carry out the instructions indicated in Section C.3. Later cars are fitted with plug-in type cables and sealing sleeves.

Section CC.4

CONTACT BREAKER MECHANISM

At the specified intervals check the contact breaker as follows:

(1) Turn the crankshaft until the contact breaker points are fully opened and check the gap with a gauge having a thickness of from ·014 to ·016 in. (·36 to ·40 mm.). If the gap is correct the gauge should be a sliding fit. Do not alter the setting unless the gap varies considerably from the gauge thickness.

To adjust the setting keep the engine in the position which gives maximum opening of the contacts and then slacken the two screws securing the fixed contact plate. Adjust the position of the plate until the gap is set to the thickness of the gauge and then tighten the two locking screws.

Remember that the cam only keeps the contact points fully open over a very small angle and that care must be taken to ensure that the points are in the fully open position.

(2) If the contacts are dirty or pitted they must be cleaned by polishing them with a fine carborundum stone and afterwards wiping them with a petrol-moistened cloth. The moving contact can be removed from its mounting in order to assist cleaning. Check and adjust the contact breaker setting after cleaning the contacts.

(3) Check that the moving arm moves freely on its pivot. If it is sluggish remove the moving arm and polish the pivot pin with a strip of fine emery-cloth. Afterwards clean off all trace of emery dust and apply a spot of clean engine oil to the top of the pivot.

The contact breaker spring tension should be between 20 and 24 oz. (567 and 680 gm.) measured at the contacts.

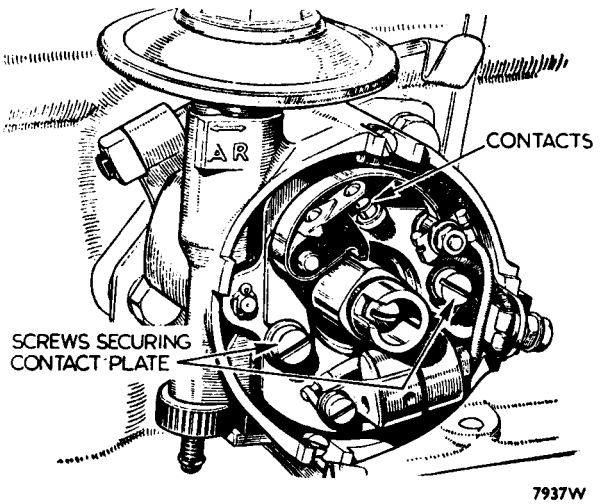

Fig. CC.2

The contact breaker, showing the adjustment screws

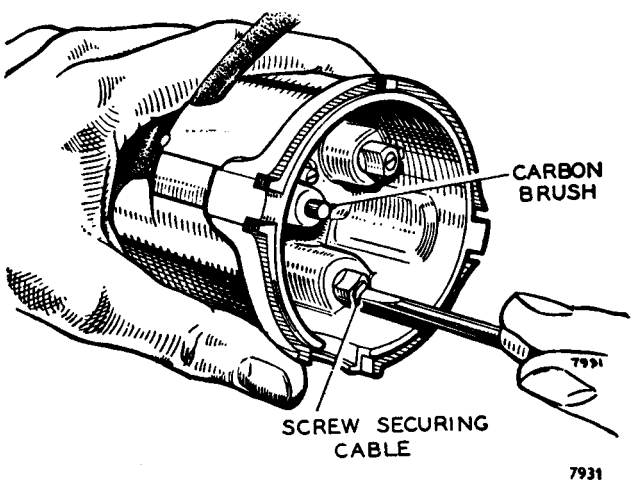

Fig. CC.1

Shows how the high-tension cables are secured to the distributor pick-up segments by means of pointed fixing screws (earlier cars)

Section CC.5

DISTRIBUTOR LUBRICATION

To be carried out after servicing the distributor, and at the specified intervals.

(1) Give the cam a light smear of grease to Ref. C (page PP.2) and apply a slight trace of oil to the top of the contact breaker lever pivot pin.

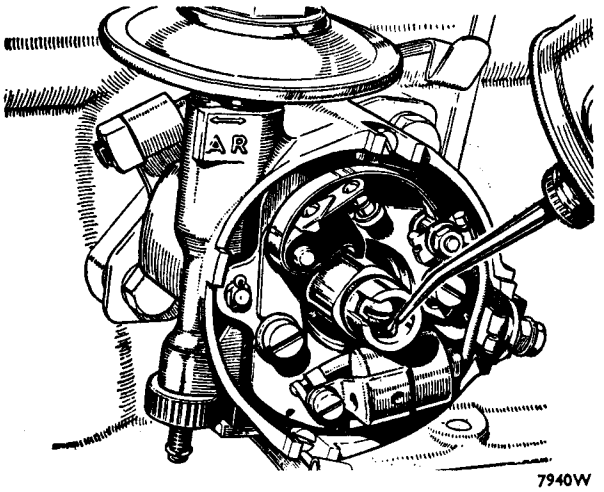

Fig. CC.3

The cam bearing is lubricated through the opening revealed when the distributor rotating arm is withdrawn. Thin machine oil should be used

(2) Lift the rotor arm off the top of the spindle and add a few drops of thin machine oil through the lubricating passage provided in the spindle to lubricate the cam bearing and distributor shaft. (Do not remove the screw in the top of the spindle as an oilway is provided.) Refit the rotor correctly and push it on the shaft as far as it will go.

(3) Add a few drops of engine oil to Ref. D (page PP.2) through the hole in the contact breaker base through which the cam passes in order to lubricate the automatic timing control. Do not allow any oil to get on or near the contacts.

Section CC.6

REMOVAL AND REPLACEMENT OF THE DISTRIBUTOR

The distributor can be removed and replaced without interfering with the ignition timing, provided the clamp plate pinch-bolt is not disturbed.

To facilitate the replacement of the distributor turn the engine over until the rotor arm is pointing to the segment in the cover for No. 1 cylinder plug lead.

Remove the distributor cap; disconnect the low-tension lead from the 2 B.A. terminal and the suction advance pipe at the union on the distributor.

Extract the two bolts securing the distributor clamp plate to the distributor housing and withdraw the distributor.

To replace the distributor insert it into the distributor housing until the driving dog rests on the distributor drive shaft. The rotor arm should then be rotated slowly until the driving dog lugs engage with the drive shaft slots, both of which are offset to ensure correct replacement. Turn the distributor body to align the clamping plate holes with those in the housing. The remainder of the assembly is now in the reverse order to that of removal.

NOTE.—Provided that the engine has not been turned, the rotor arm will be opposite the segment for No. 1 plug lead. The high-tension leads can then be replaced on their respective plug terminals in the order of firing, i.e. 1, 3, 4, 2, remembering that the distributor rotation is anti-clockwise when viewed from above.

Section CC.7

STATIC IGNITION TIMING

Before timing the ignition refer to **'GENERAL DATA'** for the correct setting.

To set the distributor in the correct position for firing if the timing has been lost the following procedure should be followed:

(1) Turn the engine until No. 1 piston is at T.D.C. on its compression stroke. This can best be effected by turning the engine and observing the valves. When the valves are 'rocking' (i.e. exhaust just closing and inlet just opening) on No. 4 cylinder

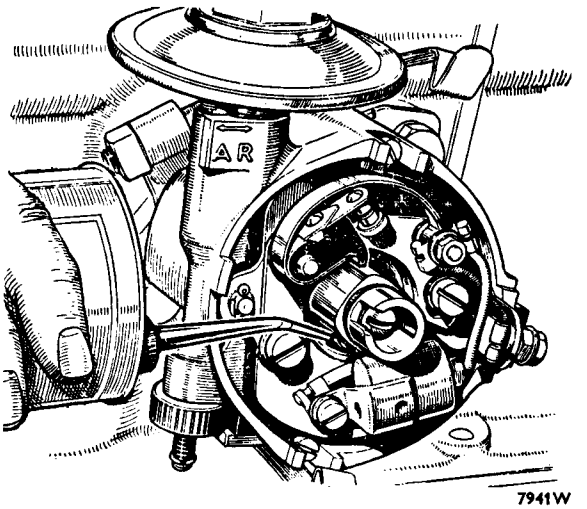

Fig. CC.4

The advance control mechanism is lubricated through the aperture round the cam spindle. Take care that no oil finds its way onto the contact points

No. 1 piston is approximately at T.D.C. on its compression stroke. If the engine is now rotated until the groove in the crankshaft pulley is in line with the pointer on the timing cover or the dimples on the crankshaft and camshaft gears are in line the piston is exactly at T.D.C. (see Figs. AA.15 and AA.16).

(2) Set the contact breaker points to ·014 to ·016 in. (·36 to ·40 mm.) when fully open.

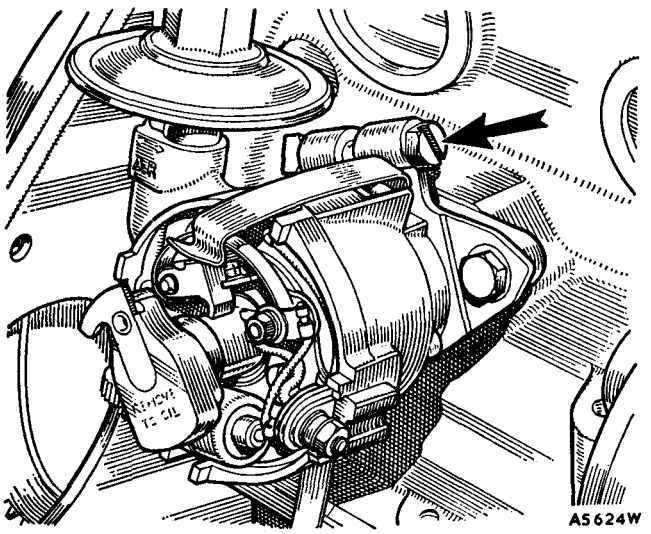

Fig. CC.5

The distributor can be withdrawn after removing the two bolts. Do not slacken the clamp bolt indicated by the arrow

(3) Insert the distributor into its housing, and engage the drive dog with the drive shaft slots (both of which are offset) by slowly rotating the rotor arm.

(4) Fit but do not tighten the two bolts securing the distributor clamp plate to the distributor housing.

(5) Position the distributor so that the vacuum control unit is to the rear and the unit is vertical.

(6) Rotate the distributor body anti-clockwise until the points are fully closed. Then slowly rotate it in a clockwise direction until the points just commence to open. Tighten up the clamp plate pinch-bolt and check that the rotor arm is opposite the correct segment for the cylinder which is at the top of its compression stroke.

(7) Tighten the two bolts securing the distributor clamp plate to the distributor housing.

IMPORTANT.—To obtain an accurate setting an electrical method should be used to determine the actual position at which the points break.

With the low-tension lead connected to the distributor, turn on the ignition switch and connect a 12-volt lamp in parallel with the contact breaker points (i.e. one lead from the distributor low-tension terminal and the other to earth) and turn the distributor as detailed in paragraph (6) until the lamp lights, which indicates that the points have just opened.

If a stroboscopic lamp is used, do not allow the engine r.p.m. to rise high enough to operate the centrifugal advance weights.

NOTE.—If the distributor drive gear assembly has been removed from the engine it should be refitted in accordance with the instructions given in Section AA.28, and the above operations can then be carried out.

Section CC.8

DISMANTLING THE DISTRIBUTOR

The contact breaker plate may be removed as an assembly to give access to the centrifugal weights. To do this the rotor arm must first be removed and then the low-tension terminal nuts slackened to enable the slotted connector to be withdrawn from between the head of the terminal bolt and the insulating washer. Next take out the spring clip securing the suction advance unit arm to the plate and release the plate assembly by extracting the two screws which secure it to the distributor body.

The following procedure is necessary if the distributor is to be completely stripped. Before dismantling note the positions in which the various components are fitted so that they may be replaced correctly.

(1) Spring back the clips and remove the moulded cap.

(2) Lift the rotor off the top of the spindle. If it is a tight fit it must be carefully levered off.

(3) Remove the nut and washer from the moving contact anchor pin. Withdraw the insulating sleeve from the capacitor lead and low-tension lead connectors, noting the order in which they are fitted. Lift the moving contact from the pivot pin and remove the large insulating washer from the pivot pin and the small one from the anchor pin.

(4) Take out the two screws, each with a spring and flat washer, securing the fixed contact plate and remove the plate.

(5) Take out the securing screw and remove the capacitor. Note that the earthing lead, which is attached to the same screw, passes under the capacitor to keep clear of the cams.

(6) Remove the spring clip retaining the suction advance unit arm to the contact breaker base plate. Extract the two screws securing the base plate to the distributor body, noting that one also secures the earthing lead, and lift out the base plate.

IMPORTANT.—Note the relative position of the rotor arm drive slot in the cam spindle and the offset drive dog at the driving end of the spindle to ensure that the timing is not 180° out when the cam spindle is engaged with the centrifugal weights during reassembly.

(7) Take out the cam retaining screw and remove the cam spindle.

(8) Take out the centrifugal weights. These may be lifted out as two assemblies, each complete with a spring and toggle.

(9) To release the suction advance unit remove the circlip, adjusting nut, and spring. Withdraw the unit. Take care not to lose the adjusting nut lock spring clip.

(10) To release the spindle from the body drive out the parallel driving pin passing through the collar of the driving tongue member at the lower end of the spindle.

Section CC.9

CAPACITOR

The best method of testing the capacitor is by substitution. Disconnect the original capacitor and connect a new one between the low-tension terminal of the distributor and earth.

Should a new capacitor be necessary, it is advisable to fit a complete capacitor and bracket, but should a capacitor only be available, use a hot iron to soften the solder securing the defective capacitor to the bracket. Care must be taken not to overheat the new capacitor when soldering it in position. The capacity of the capacitor is 0·2 microfarad.

Section CC.10

REASSEMBLING THE DISTRIBUTOR

Reassembly is a direct reversal of the dismantling procedure given in Section CC.8, although careful attention must be given to the following points:

(1) As they are assembled the components of the automatic advance mechanism, the distributor shaft, and the portion of the shaft on which the cam fits must be lubricated with thin, clean engine oil to Ref. D (page PP.2).

(2) Turn the vacuum control adjusting nut until it is in the half-way position when replacing the control unit.

(3) When engaging the cam driving pins with the centrifugal weights ensure that they are in the original position. When seen from above, the small offset of the driving dog must be on the right and the driving slot for the rotor arm must be downwards.

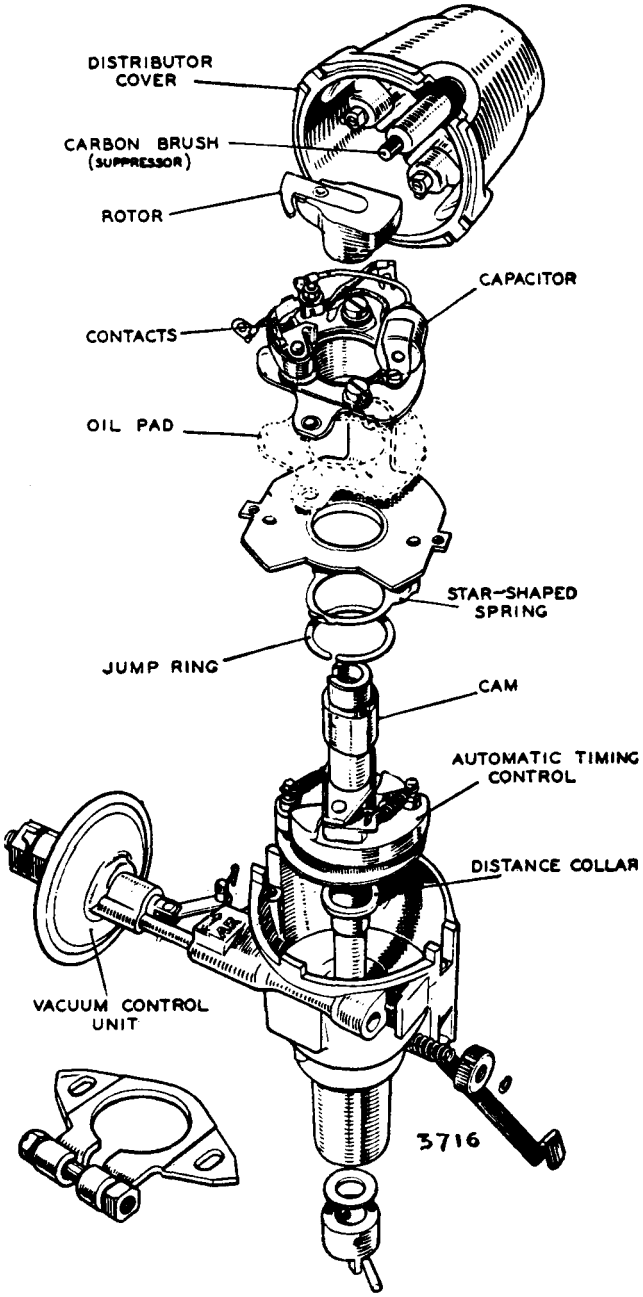

Fig. CC.6

The component parts of the distributor fitted to the Morris Minor (Series II)

(4) Adjust the contact breaker to give a maximum opening of ·014 to ·016 in. (·36 to ·40 mm.).

Section CC.11

IGNITION VACUUM PIPE

On later engines a modified ignition vacuum pipe (Part No. 2A 546) is fitted. A small trap, which contains a fine-mesh gauze, is incorporated in the pipe to prevent fuel entering the vacuum control unit. This modified pipe may be fitted to earlier models.

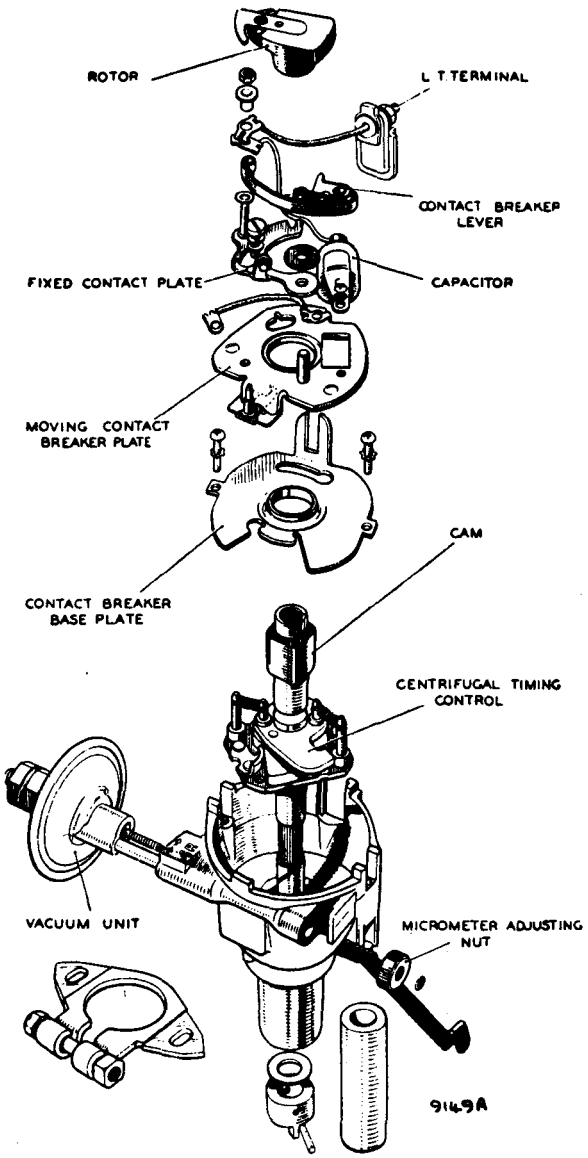

Fig. CC.7

The component parts of the DM2P4 pre-tilt distributor

Section CC.12

DM2P4 PRE-TILT DISTRIBUTOR

The DM2P4 distributor fitted to later cars has a pre-tilted contact breaker unit. The moving contact breaker plate is balanced on two nylon studs and the angle through which the plate may be tilted is controlled by a stud riveted to the moving contact breaker plate locating in a slot in the base plate. The plate carrying the fixed contact is secured by one screw only (centre arrow, Fig. CC.8) on the new units.

To adjust the contact breaker gap (left-hand arrow, Fig. CC.8) turn the engine by hand until the contacts show the maximum opening. This should measure ·014 to ·016 in. (·36 to ·40 mm.). If the setting is incorrect

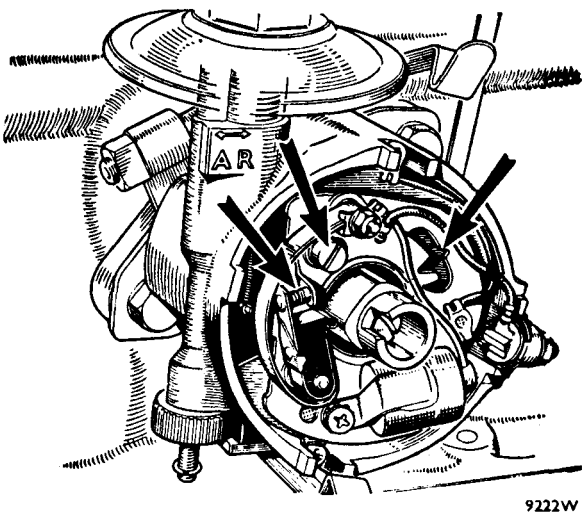

Fig. CC.8

The DM2P4 distributor with the cover and rotor arm removed, showing the contact breaker mechanism

slacken the securing screw and adjust the contact gap by inserting a screwdriver in the notched hole (right-hand arrow, Fig. CC.8) and moving the plate carrying the fixed contact. Turn clockwise to reduce the gap and anti-clockwise to increase the gap. Tighten the securing screw.

The base plate components are assembled with a special lubricant and no further lubrication is necessary during the normal service life of the distributor.

An improved version of the metallized capacitor is fitted, and the eyelets on the cables connected to the contact breaker terminal post are squared and slotted to prevent them twisting round and short-circuiting against the distributor. A flexible actuating link connects the diaphragm in the vacuum unit with the moving contact breaker plate.

The new contact breaker base plates are not interchangeable with those of the previous type, and to avoid confusion distributors incorporating them are issued under a new part number (2A 610). A number of parts associated with the contact breaker plates have also changed, and it is important to state clearly the number stamped on the side of the DM2 distributor when ordering new components.

This change is introduced at Engine No. 241328 and on earlier models from Engine Nos. 240327 to 240601.

Section CC.13

ENGINE/DISTRIBUTOR FIXING

When fitting a distributor it is important that one or both of the two set screws, distributor clamp plate to distributor housing, are left slack until after the clamp plate pinch-bolt has been tightened.

A clamp plate pinch-bolt incorporating a fixed nut and rotating bolt should be tightened to 50 lb. in. (·576 kg. m.), but the torque loading of a pinch-bolt, which is tightened by means of the nut, is 30 lb. in. (·346 kg. m.).

SECTION D

THE COOLING SYSTEM

OF THE MORRIS MINOR (Series MM)

Description of the circulating system.

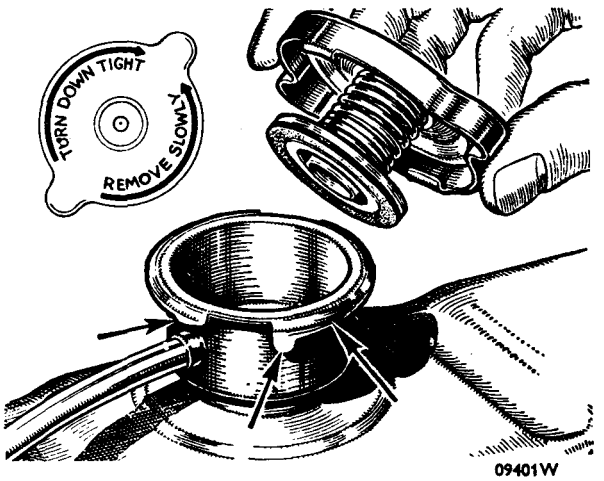

Fig. D.1

The filler cap of the pressurized cooling system, showing its retaining cam with safety lobe

GENERAL DESCRIPTION

The cooling system is of the pressurized thermo-siphon type in which water circulates from the base of the radiator and passes around the cylinders and cylinder head, reaching the header tank of the radiator core via the top water hose. From the header tank it passes down the radiator core to the base tank of the radiator. Air is drawn through the radiator by a fan attached to the dynamo pulley, which is driven by a belt from the crankshaft.

Section D.1

REMOVING THE FILLER CAP

The cooling system is under considerable pressure while the engine is hot after a run, and the radiator filler cap must be removed very carefully or left in position until the water has cooled.

If it is necessary to remove the filler cap when the engine is hot it is absolutely essential to remove it gradually, and the filler spout is provided with a specially shaped cam to enable this to be done easily.

Unscrew the cap slowly till the retaining tongues are felt to engage the small lobes on the end of the filler spout cam, and wait until the pressure in the radiator is fully released before finally removing the cap.

It is definitely advisable to protect the hand against escaping steam while removing the cap when the system is hot.

Section D.2

DRAINING THE COOLING SYSTEM

Remove the radiator header tank filler cap.

Open the drain tap on the right-hand side of the base of the radiator.

NOTE.—If Bluecol or other anti-freeze mixture is being used it should be drained into a suitable container and carefully preserved for replacement.

Later models have a rubber extension on the radiator drain tap to facilitate this.

Section D.3

FILLING THE COOLING SYSTEM

Close the radiator drain tap.

Ensure that the water hose clips are tightened.

Fill up the system through the filler in the radiator header tank until the water is ½ in. (12 mm.) below the top of the filler orifice.

When possible, rain-water should be used for filling the system.

Avoid overfilling when anti-freeze is in use to avoid unnecessary loss on expansion.

Screw the filler cap firmly into position.

The cooling system is unsuitable for use with anti-freeze mixtures having an alcohol base owing to the high temperatures attained in the top tank. Only anti-freeze mixtures of the ethylene glycol or glycerine type should be employed.

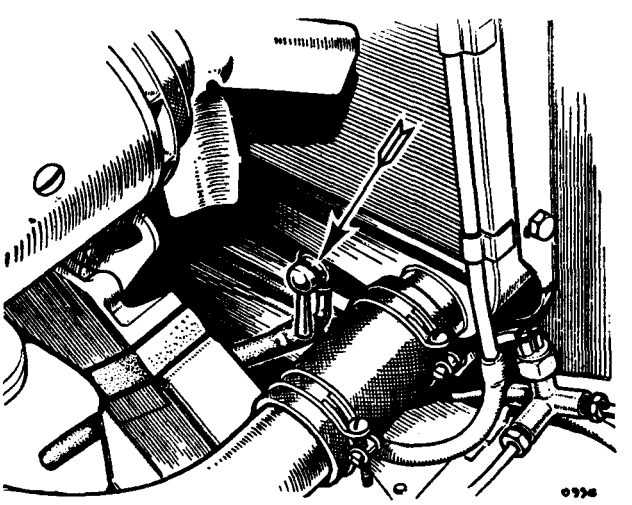

Fig. D.2

The location of the drain tap for the cooling system

Section D.4

REMOVAL AND REPLACEMENT OF THE RADIATOR

It is unnecessary to detach the radiator mask to remove the radiator core.

Drain the water from the radiator as in Section D.2.

Release the clips on the top and bottom water hoses and detach the hoses from their connections.

Remove the four ¼ in. bolts and spring washers securing the radiator assembly to the cowl and lift out the radiator.

The radiator core is replaced by a reversal of the above procedure.

Section D.5

DYNAMO AND FAN BELT ADJUSTMENT

The adjustment of the dynamo and fan belt tension is effected by slackening off slightly the two bolts on which the dynamo pivots, releasing the bolt securing it to the slotted link, and raising the dynamo bodily until the belt tension is correct. Tighten up the three bolts with the dynamo in this position.

NOTE.—A gentle hand pull only must be exerted on the dynamo, otherwise the belt tension will be excessive and undue strain thrown on the dynamo bearings.

To check the tension for correctness rotate the fan blades. If the dynamo pulley slips inside the fan belt the tension is insufficient. When the tension is correct it should be possible to move the belt from side to side to the extent of 1 in. (2·5 cm.) at the centre of the belt run.

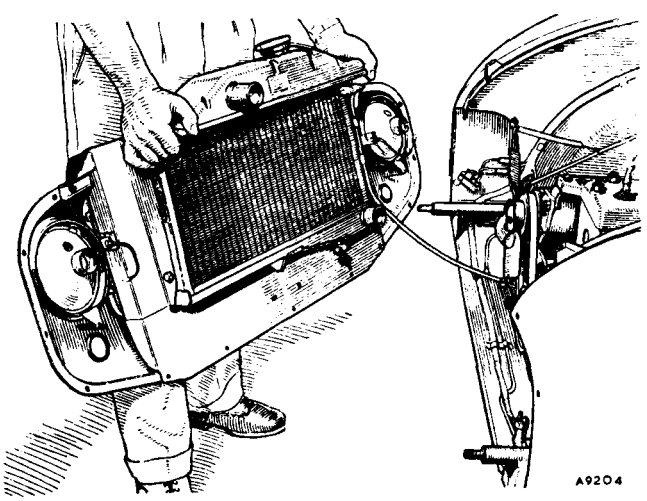

Fig. D.3

The radiator can be removed complete with its mask, as shown in this illustration, if desired

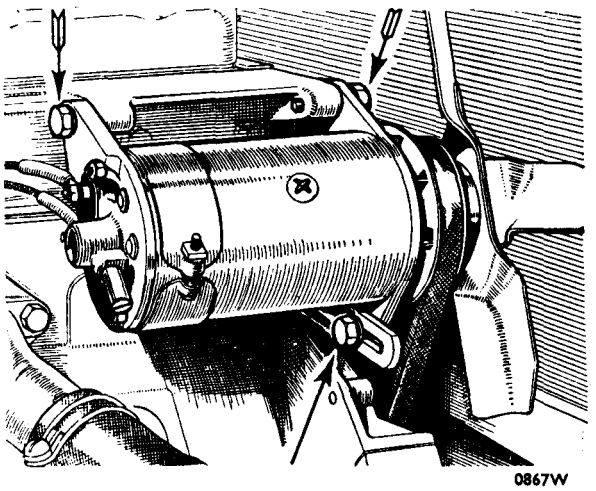

Fig. D.4

The two upper arrows indicate the pivot bolts of the dynamo mounting and the lower arrow the adjusting bolt

Section D.6

RADIATOR BOTTOM HOSE

A new one-piece radiator bottom hose (Part No. 139232) now replaces the connecting pipe and short hoses used on the earlier models.

This provides greater flexibility and reduces the number of joints.

Section D.7

REMOVING THE WATER PUMP

Morris Minor cars subsequent to Engine No. 77000 which are fitted with heater equipment are provided with a water pump of the impeller type which also carries the cooling fan. The water pump and fan assembly is attached to the front of the cylinder block by four studs and nuts.

To remove the water pump it is first necessary to drain the water from the cooling system by opening the tap at the base of the radiator and removing the filler cap, remembering to collect the water for re-use if it contains anti-freeze mixture, and then disconnect the battery lead from the negative terminal.

Slacken the attachment clips for the top radiator hose and remove the hose.

Release the hose clips from the radiator inlet at the base of the radiator and release the hose from the pipe.

Remove the radiator by unscrewing the two set bolts on each side which attach it to the cowl assembly and withdrawing it vertically.

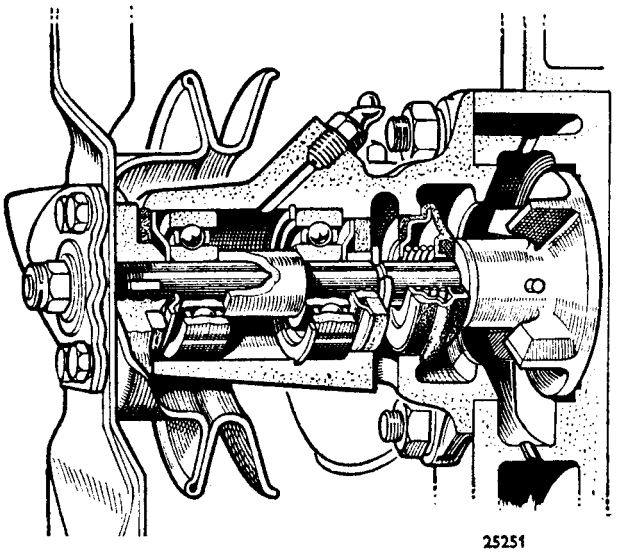

Fig. D.5

The water pump in section, showing the disposition of its components

Release the heater pipe from the pump after undoing the hose retaining clips.

Release the belt tension by slackening the three dynamo attachment bolts.

Unscrew the four nuts attaching the pump assembly to the front of the cylinder block and withdraw the fan and pump assembly from the studs.

Replacement of the fan and pump assembly is a reversal of this procedure, but care must be taken to see that the joint gasket between the pump body and the cylinder block is in good condition and not damaged in any way. It is always best to fit a new gasket.

Section D.8

DISMANTLING THE WATER PUMP

When the fan and water pump assembly have been removed from the engine, as indicated in Section D.7, the water pump may be dismantled for attention in the following way.

Unscrew the four set bolts which attach the fan and belt pulley to the hub and remove the fan and pulley.

Unscrew the self-locking nut from the end of the pump spindle and pull off the fan hub with a suitable extractor, taking care of the felt oil seal at the back of the hub.

Remove the Woodruff key from the spindle and remove any burrs from the keyway. Withdraw the dished oil seal washer.

Gently tap the pump spindle rearwards out of the pump body. This will release the spindle assembly with the sealing gland and impeller and also the flat dust cover for the rear bearing felt oil seal.

If it is necessary to withdraw the water seal for renewal the impeller should be released from the spindle by driving out the taper pin and pulling the impeller and water seal off the spindle.

Alternatively the circlip washer can be released from its groove in the spindle, but this is generally more difficult.

Should it be necessary to withdraw the ball races, the front one can be withdrawn without difficulty with an extractor or by tapping it out carefully from the rear with a suitable drift, after removing the rear felt oil seal, seal collar, and dished dust cover.

When the front bearing is removed it releases the distance tube between the bearings and gives access to the circlip retaining the rear bearing in the pump body. When this circlip is extracted it permits the withdrawal of the rear bearing from the front of the pump body. This circlip is, however, difficult to remove without damage and it should not be disturbed unless it is necessary to replace the rear bearing.

Reassembly is a reversal of the dismantling procedure, but care must be taken to see that both the water seal and its seating on the impeller are in good condition before proceeding. If these show signs of damage they should be replaced by new components, and it must be noted that the seating for the water seal on the water impeller is brazed in position and is part of the impeller.

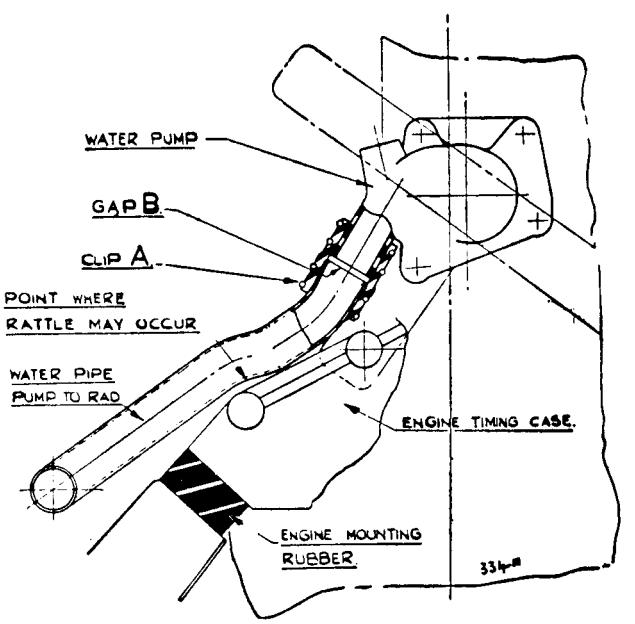

Fig. D.6

Illustrating the point where the bottom water pipe occasionally contacts the engine mounting foot

The seating is serviced as a separate item and can be renewed by turning off the old seating and brazing on a new one if desired.

It is also advisable to renew the felt oil-sealing washers for the ball races if these show signs of damage.

Section D.9

LOCATING THE BOTTOM WATER PIPE

In some cases complaints of noise on Morris Minor cars equipped with water pumps have indicated that the cause is contact between the bottom water pipe and the engine front mounting foot.

When this is established as the cause the trouble can be corrected by releasing the lower clip (A in Fig. D.6) and moving the pipe upwards towards the pump body in order to close up the gap between the end of the pipe and the pump inlet.

In cases where sufficient clearance is not obtained before the gap (B in Fig. D.6) closes completely material may be removed from the top end of the water pipe to provide the required clearance.

SECTION DD

THE COOLING SYSTEM

OF THE MORRIS MINOR (Series II)

Description of the circulating system.

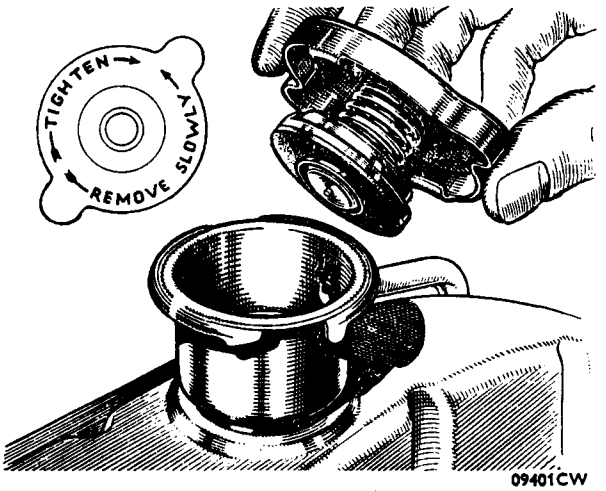

Fig. DD.1

The filler cap of the pressurized cooling system, showing its retaining cam with safety lobe

GENERAL DESCRIPTION

The cooling system is pressurized, and the water circulation is assisted by a pump attached to the front of the engine and driven by a belt from the crankshaft. The water circulates from the base of the radiator and passes around the cylinders and cylinder head, reaching the header tank of the radiator core via the thermostat and the top water hose. From the header tank it passes down the radiator core to the base tank of the radiator. Air is drawn through the radiator by a fan attached to the water pump pulley.

The thermostat opens at approximately 72° C. (162° F.) except in the case of a car fitted with a heater, which has a thermostat set to open between 80 and 85° C. (176 and 185° F.).

Section DD.1

REMOVING THE FILLER CAP

The cooling system is under appreciable pressure while the engine is hot after a run, and the radiator filler cap must be removed very carefully or left in position until the water has cooled.

If it is necessary to remove the filler cap when the engine is hot it is absolutely essential to remove it gradually, and the filler spout is provided with a specially shaped cam to enable this to be done easily.

Unscrew the cap slowly till the retaining tongues are felt to engage the small lobes on the end of the filler spout cam, and wait until the pressure in the radiator is fully released before finally removing the cap.

It is definitely advisable to protect the hand against escaping steam while removing the cap when the system is hot.

Section DD.2

DRAINING THE COOLING SYSTEM

Remove the radiator header tank filler cap.

Open the two drain taps. One is fitted on the left-hand side of the base of the radiator and the other at the rear of the cylinder block on the left-hand side.

NOTE.—If Bluecol or other anti-freeze mixture is being used it should be drained into a suitable container and carefully preserved for replacement.

A rubber extension is provided on the radiator drain tap to facilitate this.

Section DD.3

FILLING THE COOLING SYSTEM

Close the radiator and cylinder drain taps.

Ensure that the water hose clips are tightened.

Fill up the system through the filler in the radiator header tank until the water is ½ in. (12 mm.) below the top of the filler orifice.

When possible, rain-water should be used for filling the system.

Avoid overfilling when anti-freeze is in use to prevent unnecessary loss on expansion.

Screw the filler cap firmly into position.

The cooling system is unsuitable for use with anti-freeze mixtures having an alcohol base owing to the high

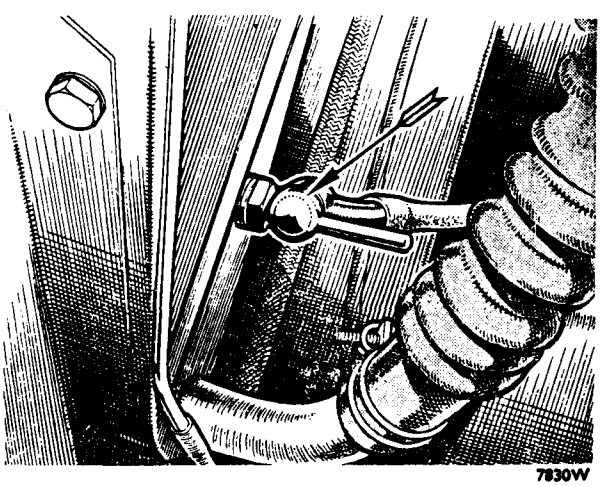

Fig. DD.2

The location of the drain tap on the radiator

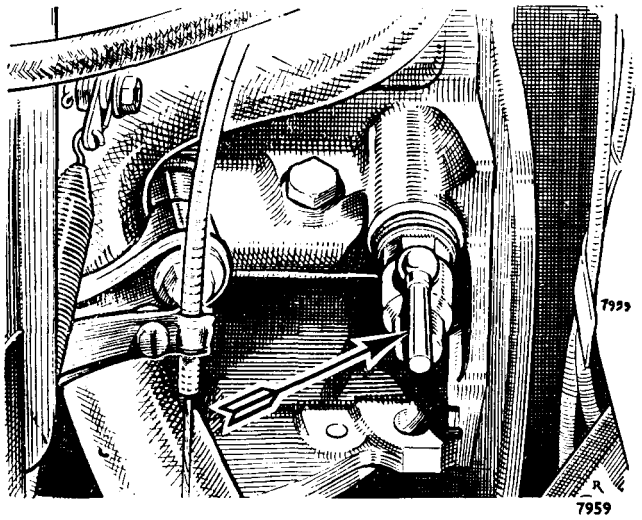

Fig. DD.3

The position of the drain tap on the cylinder block

temperatures attained in the top tank. Only anti-freeze mixtures of the ethylene or glycerine type should be employed.

Section DD.4

REMOVAL AND REPLACEMENT OF THE RADIATOR

It is unnecessary to detach the radiator mask to remove the radiator core.

Drain the water from the radiator as in Section DD.2.

Release the clips on the top and bottom water hoses and detach the hoses from their connections.

Remove the heater hose from its connection at the bottom right-hand side of the radiator on cars fitted with heaters.

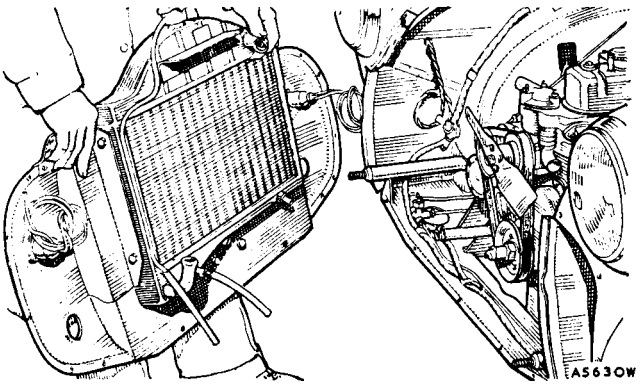

Fig. DD.4

The radiator can be removed complete with its mask, as shown in this illustration, if desired

Remove the four ¼ in. bolts and spring washers securing the radiator assembly to the cowl and lift off the radiator.

The radiator core is replaced by a reversal of the above procedure.

Section DD.5

DYNAMO AND FAN BELT ADJUSTMENT

The adjustment of the dynamo and fan belt tension is effected by slackening off slightly the two bolts on which the dynamo pivots and releasing the bolt securing it to the slotted link and the nut securing the slotted link to the engine. This can be done most easily from beneath the car. Raise the dynamo bodily until the belt tension is correct. Tighten up the bolts with the dynamo in this position.

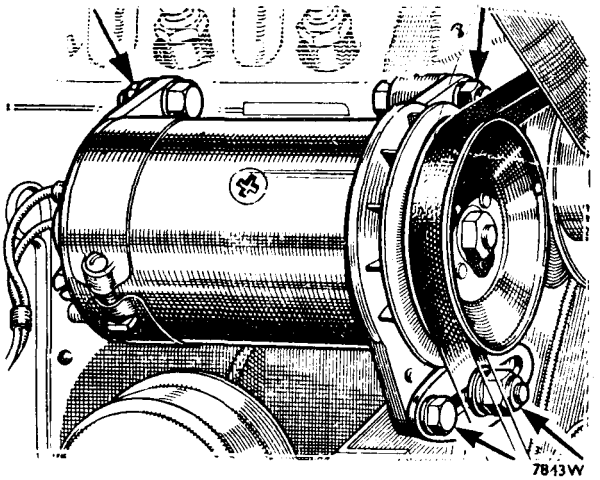

Fig. DD.5

The two upper arrows indicate the pivot bolts of the dynamo mounting and the lower arrows the adjusting bolts

NOTE.—**A gentle hand pull only must be exerted on the dynamo, otherwise the belt tension will be excessive and undue strain thrown on the dynamo bearings.**

To check the tension for correctness rotate the fan blades. If the dynamo pulley slips inside the fan belt the tension is insufficient. When the tension is correct it should be possible to move the belt from side to side to the extent of 1 in. (2·5 cm.) at the centre of the longest belt run.

Section DD.6

REMOVING THE WATER PUMP

The water pump and fan assembly is attached to the front of the cylinder block by four studs and nuts.

To remove the water pump it is first necessary to drain the water from the cooling system by opening the two drain taps as described in Section DD.2, at the same time remembering to collect the water for re-use if it contains anti-freeze mixture. Then disconnect the battery lead from the negative terminal.

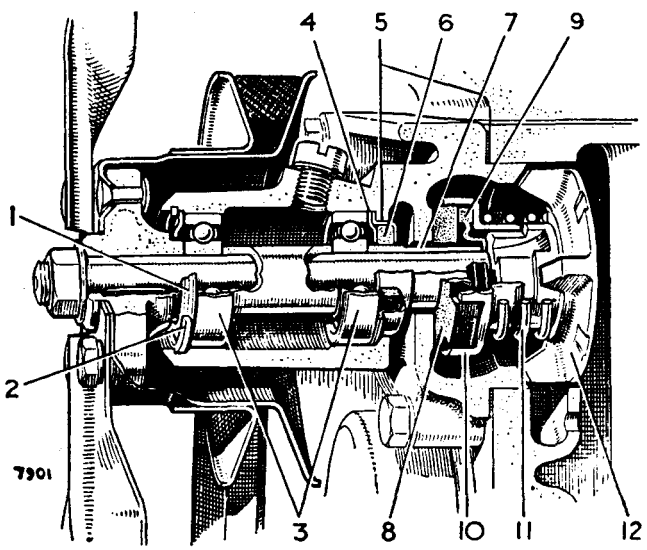

Fig. DD.6

The component parts of the water pump

1. Bearing grease retainer.
2. Circlip.
3. Bearing.
4. Outer felt retainer.
5. Inner felt retainer.
6. Felt.
7. Distance piece.
8. Seal.
9. Rubber seal.
10. Spring locating cup.
11. Water seal spring.
12. Vane with spindle.

Slacken the attachment clips for the top radiator hose and remove the hose.

Release the hose clips from the radiator inlet at the base of the radiator and release the hose from the pipe. If the car is fitted with a heater disconnect the heater outlet pipe from the bottom right-hand side of the radiator. Remove the radiator by unscrewing the two set bolts on each side which attach it to the cowl assembly and withdrawing it vertically.

Slacken the top clip on the thermostat by-pass hose.

Remove the dynamo attachment bolts and take off the dynamo.

Unscrew the four nuts attaching the pump assembly to the front of the cylinder block and withdraw the fan and pump assembly from the studs, together with the thermostat by-pass hose.

Replacement of the fan and pump assembly is a reversal of this procedure, but care must be taken to see that the joint gasket between the pump body and the cylinder block is in good condition and not damaged in any way. It is always best to fit a new gasket.

Section DD.7

DISMANTLING THE WATER PUMP

When the fan and water pump assembly has been removed from the engine, as indicated in Section DD.6, the water pump may be dismantled for attention in the following way.

Unscrew the four set bolts which attach the fan and belt pulley to the hub and remove the fan and pulley.

Unscrew the nut and spring washer from the end of the pump spindle and pull off the fan hub with a suitable extractor.

Remove the Woodruff key from the spindle and remove any burrs from the keyway. Withdraw the dished oil seal washer after removing its circlip.

Gently tap the pump spindle rearwards out of the pump body. This will release the spindle assembly with the sealing gland and the vane.

The water seal consists of a hard moulded seal which has two lugs which fit in recesses in the spring-locating cup. This cup is spring-loaded against the vane and splined to it. Between the spring-locating cup and the hard seal is an additional rubber seal. Any of these components may be renewed without difficulty.

Should it be necessary to withdraw the ball races, the front one can be withdrawn with an extractor. When the front bearing is removed it releases the distance tube between the bearings and gives access to the rear bearing. When the rear bearing is extracted it permits the withdrawal of the felt washer along with its inner and outer retainers. The rear distance piece now remains in the pump body and may be removed if required.

Reassembly is a reversal of the dismantling procedure, but care must be taken to see that the seal assembly is in good condition before proceeding. If it shows signs of damage any defective parts should be replaced by new components.

It is also advisable to renew the felt oil-sealing washer for the rear ball race if it shows signs of damage.

Repack the bearings with grease to Ref. C (page PP.2).

Section DD.8

IMPROVED WATER PUMP

A water pump of improved design with a modified seal was introduced at Engine No. 72610. Commencing at the same engine number, a new wedge-type fan belt was also introduced and the pulleys were modified to suit.

The new fan belt and pulleys are only interchangeable with the components on the earlier engines in sets.

SECTION DDD

THE COOLING SYSTEM

OF THE MORRIS MINOR 1000

Section DDD.1

REMOVING AND DISMANTLING THE WATER PUMP

Remove the radiator as detailed in Section DD.4.

Slacken the top clip of the thermostat by-pass hose.

Remove the dynamo attachment bolts and take off the dynamo.

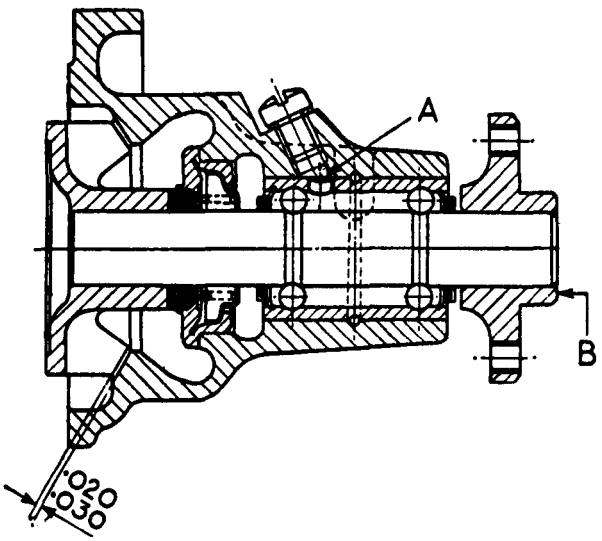

Fig. DDD.1

A section through the water pump showing the location of the components. When assembled, the hole in the bearing must coincide with the lubricating hole in the water pump (A) *and the face of the hub* (B) *must be flush with the end of the spindle*

Unscrew the four bolts attaching the pump assembly to the front of the cylinder block and remove the fan and pump assembly together with the thermostat by-pass hose.

Replacement of the fan and pump assembly is a reversal of this procedure.

Dismantling

Unscrew the four set bolts which attach the fan and belt pulley to the hub and remove the fan and pulley.

Remove the fan hub with a suitable extractor.

Pull out the bearing locating wire through the hole in the top of the pump body.

Gently tap the pump bearing assembly rearwards out of the pump body. This will release the combined bearing and spindle assembly together with the seal and vane.

Remove the vane from the bearing assembly with a suitable extractor and remove the pump seal assembly.

Reassembly is a reversal of the dismantling procedure, but care must be taken to see that the seal assembly is in good condition. If there is any sign of damage the seal should be replaced by a new component. When the bearing assembly is assembled into the pump the hole in the bearing must coincide with the lubricating hole in the water pump body.

Section DDD.2

MODIFIED FAN HUB

Commencing at Car Nos. 9M-U-H93701 and 9M-U-L88392, if the fan hub is removed from the spindle it must now be replaced by a new one as there is an increased interference fit in the hub.

SECTION E

THE CLUTCH

OF THE MORRIS MINOR (Series MM)

THE FLYWHEEL AND CLUTCH COMPONENTS

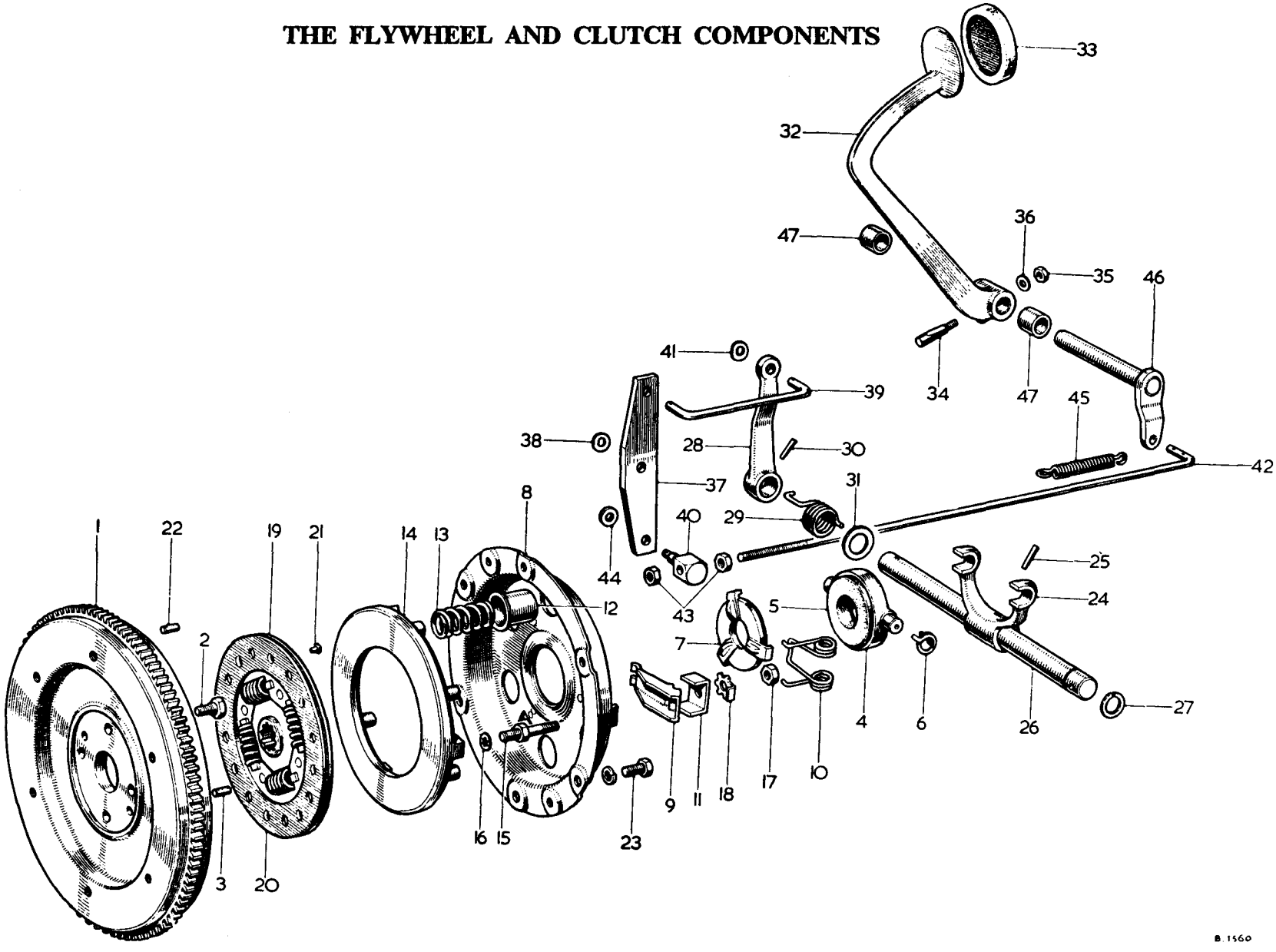

KEY TO THE FLYWHEEL AND CLUTCH COMPONENTS

No.	*Description*
1.	Flywheel and starter ring assembly.
2.	Bolt—flywheel to crankshaft.
3.	Dowel pin.
4.	Thrust ring assembly.
5.	Carbon ring—thrust.
6.	Retainer—thrust ring.
7.	Plate—thrust.
8.	Cover-plate—clutch.
9.	Release lever—clutch.
10.	Retaining spring—release lever.
11.	Anchor plate—release lever
12.	Thimble—pressure plate thrust spring.
13.	Spring—pressure plate thrust.
14.	Pressure plate.
15.	Stud—pressure plate.
16.	Lock washer—stud to plate.
17.	Nut—stud.
18.	Lock washer—stud nut.
19.	Plate—driven (assembly).
20.	Lining—clutch plate.
21.	Rivet—lining.
22.	Dowel—clutch to flywheel.
23.	Bolt—clutch to flywheel.
24.	Fork—clutch withdrawal.
25.	Taper pin—fork retaining.
26.	Shaft—withdrawal fork.
27.	Circlip—fork shaft.
28.	Lever—clutch withdrawal.
29.	Spring—clutch withdrawal lever.
30.	Taper pin—clutch withdrawal lever retaining.
31.	Washer—clutch withdrawal lever.
32.	Pedal—clutch.
33.	Pad—clutch pedal.
34.	Cotter—pedal retaining.
35.	Nut—pedal retaining cotter.
36.	Washer—pedal retaining cotter.
37.	Lever—clutch relay.
38.	Washer—anti-rattle—relay lever.
39.	Link—relay to clutch lever.
40.	Trunnion—rod to relay lever.
41.	Washer—anti-rattle—lever linkage.
42.	Connecting rod—pedal to relay lever.
43.	Locknut—rod to trunnion.
44.	Washer—trunnion to lever.
45.	Spring—pedal return.
46.	Shaft—clutch and brake pedal.
47.	Bush—pedal shaft to frame.

GENERAL DESCRIPTION

The clutch is of the single-plate dry-disc type, no adjustment for wear being provided in the clutch itself. Individual adjustment is provided for locating each lever during manufacture. The adjusting nut is locked in place by means of a special tag lock washer and should not be disturbed unless the clutch is dismantled for the renewal of parts.

The general construction may be followed by reference to Fig. E.1 and the following description.

Driven plate assembly

This consists of a splined hub and flexible steel driven plate (C) to the outer diameter of which are fixed the annular friction facings. The disc is attached to the splined hub by a spring coupling which acts as a torsional cushion.

Withdrawal bearing assembly

This comprises the graphite release bearing (G), which is mounted in a cup (H) attached to the throw-out fork, and a release plate (K) attached to the inner ends of the release levers (N). Release is accomplished by moving the release bearing forward into contact with the release plate and applying pressure to the inner ends of the levers.

Cover assembly

The release levers are pivoted on knife-edge fulcrums (O) mounted upon the clutch cover (D), and shoulder studs (Q) extend through holes at their outer ends. The studs are fitted with adjusting nuts (R) which locate each lever in its correct position. The outer or shorter ends of the release levers engage the bearing plate (S) carried upon the shoulder studs attached to pressure plate lugs, and thus the pressure plate (T) is pulled away from the driven plate (C), compressing the six thrust springs (E) which are assembled between the pressure plate and the clutch cover.

When the foot pressure is removed from the clutch pedal the thrust springs force the pressure plate forward against the driven plate, gradually and smoothly applying the power of the engine to the rear wheels.

Section E.1

RUNNING ADJUSTMENTS

As the clutch facings on the driven plate (C) wear, the pressure plate (T) moves closer to the flywheel face (A) and the outer or shorter ends of the release levers follow. This causes the inner or longer ends of the levers to travel farther towards the gearbox and decreases the clearance between the release lever plate (K) and the release bearing (G). The effect on the clutch pedal is to decrease the clearance or free travel; in other words, it reduces the distance the clutch pedal moves forward before the release bearing comes in contact with the release lever plate. Some free movement must always be maintained here to prevent the clutch pedal riding against the under side of the toeboard and applying pressure on the release bearing, thus causing the clutch

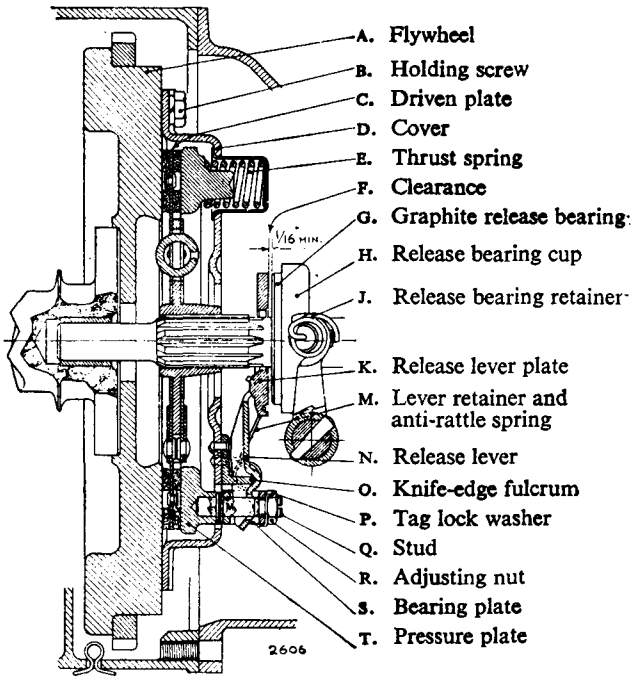

Fig. E.1
The clutch unit in section

to slip, and to prevent excessive travel of the withdrawal mechanism leading to coil binding of the clutch springs. This essential free movement is restored by adjusting the locknuts on the forward end of the clutch operating rod.

Insufficient pedal backlash or free movement will cause clutch slip. Excessive pedal movement causes the clutch springs to become compressed solid or 'coil-bound', which imposes an undue load on the release bearing, causing excessive wear.

The required pedal travel is the sum of:

(1) *The free movement* or travel produced by the clearance between the release bearing and the release lever plate necessary to ensure that the clutch is fully engaged when the foot is removed from the pedal.

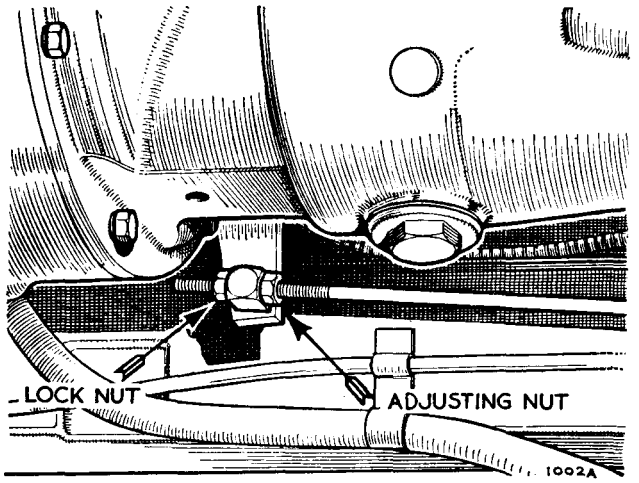

Fig. E.2

The clutch is adjusted by releasing the locknut on the clutch operating rod and screwing the adjusting nut in the required direction

(2) *The effective movement* or travel necessary to release the clutch, i.e. the amount of effective pedal movement necessary to move the release lever plate the distance required to free the clutch completely.

The free pedal movement, measured at the pedal pad must be at least ¾ in. (20 mm.). It is essential that this clearance be adhered to in order to allow the clutch to be completely released and at the same time prevent the possibility of damage to the clutch release bearing due to over-travel.

If any difficulty is experienced in freeing the clutch when the correct free pedal movement is provided, on no account should efforts be made to improve matters by attempting to increase the effective pedal travel. The actual cause must be ascertained and rectified.

Section E.2

REMOVAL OF THE CLUTCH

Remove the gearbox as in Section F.1

The clutch cover-plate assembly is removed by extracting the six bolts locating it to the flywheel. These should be slackened, part of a turn at a time to prevent distortion of the flanged edge of the cover by the pressure of the thrust springs, until the spring pressure is completely released.

The complete clutch may now be lifted off the two dowel pins, all components except the driven plate remaining assembled to the cover.

Section E.3

DISMANTLING THE CLUTCH

After removal from the engine, and before stripping down, mark the parts in such a manner that they can be reassembled in the same relative position to each other to ensure that correct balance is maintained; this applies particularly to the cover, pressure plate, and release levers. Failure to follow these instructions may result in excessive vibration at high revolutions. When a new pressure plate is fitted it is essential that the complete cover and pressure plate assembly be accurately balanced, for which reason it is not a practical proposition to fit new pressure plates unless balancing facilities are available.

If it is found necessary to renew any of the components of the cover assembly this unit can be dismantled, reassembled, and adjusted with the aid of an arbor press or drill press in the following manner.

First straighten the bent-up lobes of the tag lock washers (P) (Fig. E.1), then place the cover on the bed of the press with the pressure plate resting on wood blocks so arranged that the cover is left free to move down. Place three blocks of wood to form a bridge, the legs of which should rest on the outer rim of the clutch cover as shown in Fig. E.3.

Compress the cover with the spindle of the press, and, holding it under compression, remove the adjusting nuts (R) (Fig. E.1) and then slowly release the pressure to prevent the thrust springs from flying out.

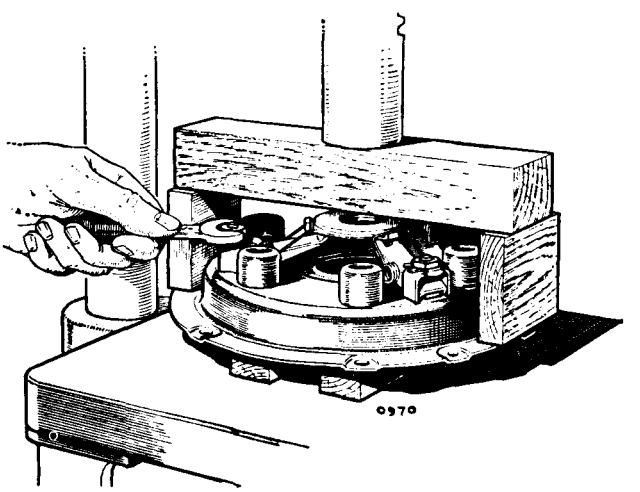

Fig. E.3

The correct procedure to adopt when dismantling the clutch cover assembly. Note the two wood blocks supporting the pressure plate on the bed of the press. These must not project beyond the pressure plate, to ensure that they do not foul the cover-plate when this is depressed by the press

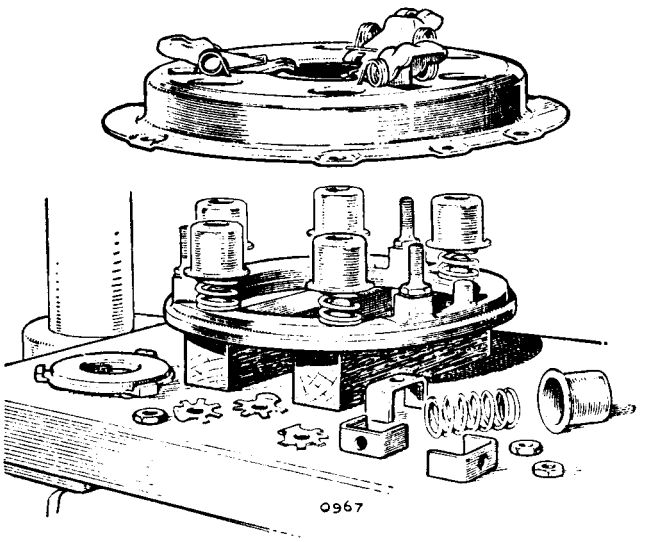

Fig. E.4

The components of the clutch ready for assembly. Note that the pressure plate is again supported on wood blocks and that the springs and their cups have to be correctly located, as shown, before the cover-plate is placed in position

The cover can then be lifted off and all parts will be accessible for inspection. It is advisable to renew any parts which show signs of wear.

Section E.4

ASSEMBLING THE CLUTCH

When reassembling the clutch it is essential that the components should be replaced in exactly the same positions as they were before removal to ensure that the clutch assembly remains in balance. This is most important, and the parts should have been marked before dismantling so that their correct positions can be identified, as indicated in Section E.3.

When new components are fitted it is essential that the complete cover and pressure plate assembly be accurately balanced. It is therefore inadvisable to fit new components unless adequate balancing facilities are available.

(1) Lay the pressure plate (T) on the wood block in the press and place the springs on it in a vertical position, seating them on the small locating bosses on the pressure plate. Now place the spring cups over their outer ends, as shown in Fig. E.4.

(2) The levers (N) can then be mounted on the knife-edge fulcrums (O) by slipping the inner ends of the release levers under the retainer springs (M), taking care that the release levers are properly seated. It is advisable to wipe the short ends of the levers and the knife-edge fulcrums with a little graphite moistened with oil, as this will help to eliminate friction at this point.

(3) The cover can now be laid on top of the assembled parts as shown in Fig. E.4, taking care that the machined portions of the pressure plate lugs are directly underneath the slots formed in the clutch cover.

(4) Place three blocks of wood to form a bridge, the legs of which should rest on the outer rim of the clutch cover (as used in the dismantling operation). The assembly is then slowly compressed, the pressure plate lugs being guided through the slots formed in the clutch cover. Care must be taken that the thrust springs remain correctly on their seats on the pressure plate.

(5) Holding the clutch under compression, the bearing plate (S) and tag lock washers (P) are then placed in position on the shoulder studs (Q). The adjusting nut (R) can then be screwed down on the shoulder stud until the nut is flush with the top of the stud.

(6) The clutch unit may now be removed from the arbor or drill press and the final setting of the release levers carried out by use of the special Service tool (No. 38446) as detailed in Section E.5.

(7) The release lever plate (K) should then be assembled to the release levers, taking care that the projecting portions engage properly in the slots formed in

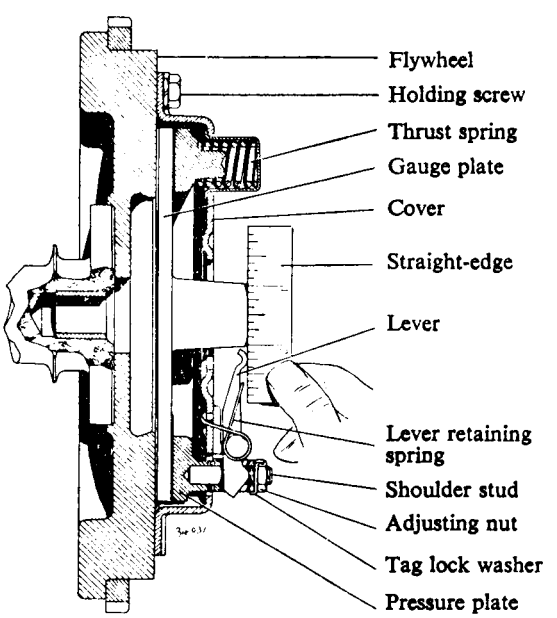

Fig. E.5

Shows how the release levers are set by means of a short straight-edge or rule placed across the boss of the special Borg & Beck gauge plate

the release lever ends. Finally, the retaining springs (M) should be fitted into the grooves formed in the release lever plate as indicated in Fig. E.1.

Section E.5

ADJUSTING THE RELEASE LEVERS

The method of adjusting the levers with the universal gauging fixture is given in Section E.10

Satisfactory operation of the clutch is absolutely dependent on accurate adjustment of the release levers so that the pressure plate face is perfectly parallel to the flywheel face. This cannot be accomplished satisfactorily by setting the ends of the release levers parallel to the face of the release bearing after the clutch has been assembled to the flywheel because of likely variation in the thickness of the driven plate. The only accurate method is to adjust the release levers while the pressure plate is held parallel to the flywheel by means of the Borg & Beck lever adjustment gauge. This special tool (Part No. 38446) is shown in Fig. E.6.

Place this gauge on the flywheel in the position normally occupied by the driven plate and mount the cover assembly on the flywheel in the same position as before dismantling. Tighten the holding screws a turn or two at a time when taking up the spring pressure, otherwise the cover will be distorted. Before the cover is tightened down be sure the gauge is correctly centred. The clutch release lever plate is attached to the release levers by the anti-rattle springs and must be taken off to set the levers.

After the cover assembly has been mounted in position a short straight-edge can then be laid across the centre boss and the bearing surface of one lever, and the nut adjusted until they are the same height. The other levers can then be set in turn by the same method. If carefully done this setting will be within ·005 in. (·13 mm.), which is the permissible tolerance. After this adjustment is completed loosen the clutch cover holding screws a turn

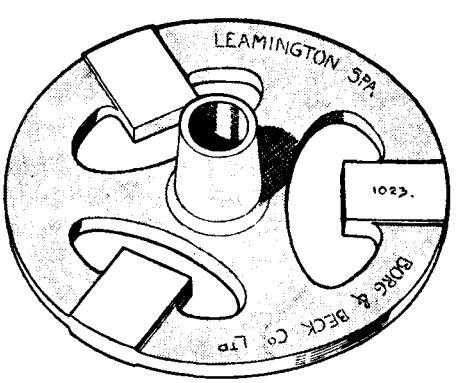

Fig. E.6

The special gauge plate necessary for setting the release levers correctly

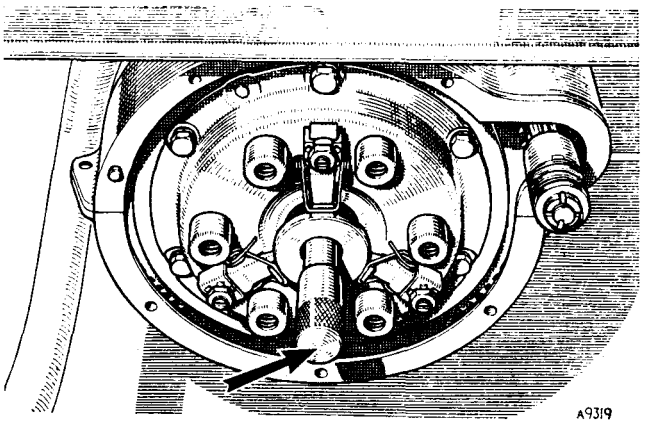

Fig. E.7

When reassembling the clutch the use of Service tool 18G 275 is necessary

at a time until the spring pressure is released, allowing the clutch assembly and the gauge plate to be removed.

Two or more lobes of the tag lock washers should then be bent flat against the adjacent side of the adjusting nut, thereby definitely locking it in position. When carrying out this operation take care not to upset the adjustments previously made.

On some clutches a different type of stud is employed, having no shoulder. It is held in position in the pressure plate by a pin passing through it and through the boss on the pressure plate. The outer end of the stud is screwed and slotted for the adjusting nut and locking split pin. If adjustment has taken place it will be necessary to redrill the nut for the split pin so that it registers with the slot in the stud.

Section E.6

REPLACEMENT OF THE CLUTCH

Adjust the release levers as in Section E.5.

Refit the release lever plate as in paragraph (7), Section E.4.

Assemble the driven plate and clutch assembly loosely to the flywheel with the chamfered end of the driven plate hub facing the gearbox, i.e. the rear of the car.

Line up the driven plate and pilot bearings with a dummy shaft (Service tool 18G 275).

Tighten the clutch cover holding screws in sequence, a turn at a time, to take up the clutch spring tension evenly and avoid distortion. When all the screws are quite tight withdraw the dummy shaft.

CAUTION.—Do not under any circumstances let the gearbox hang in the clutch assembly during the removing or refitting of the gearbox to the engine. On no account allow oil, grease, or paraffin to get on the clutch surfaces. Keep the faces dry and absolutely free of all oil.

Section E.7

SERVICING THE CLUTCH

After removal from the engine, and before stripping down, mark the parts in such a manner that they can be reassembled in the same relative position to each other to ensure that correct balance is maintained; this applies particularly to the cover, pressure plate, and release levers. Failure to follow these instructions may result in excessive vibration at high revolutions. When a new pressure plate is fitted it is essential that the complete cover and pressure plate assembly be balanced accurately, for which reason it is not a practical proposition to fit new pressure plates unless balancing facilities are available.

Spring pressure

A tolerance of from 10 to 15 lb. (4·5 to 6·8 kg.) pressure is allowable on the compression load of the operating springs when at their assembled height; all clutch springs are tested for this before assembly.

Lubrication of the splines of the driven plate is provided at assembly only. CS881 graphite grease or Duckham's Keenol must be used.

The clutch operation springs are not normally submitted to high temperatures, as the pressure plate absorbs heat rapidly and the springs make only line contact with it. In addition, a draught is continuously passing them when the engine is running.

Tolerances

Wear on the working faces of the driven plate is approximately ·001 in. per 1,000 miles (·015 mm. per 1000 km.) under normal running conditions. The alignment of the face of the driven plate must be within ·015 in. (·38 mm.) for satisfactory results.

Driven plates

It is most important that the clutch facings are not touched with greasy hands, nor any oil or grease allowed to come into contact with them.

It is essential to install a complete driven plate assembly when renewal of the friction linings is required. If the linings have worn to such an extent as to warrant renewal, then slight wear will have taken place in the splines, and also on the torque reaction springs and their seatings. The question of balance and concentricity is also involved. Under no circumstances is it satisfactory to repair or rectify faults in clutch-driven plate centres, and we do not countenance this as manufacturers.

Condition of clutch facings in service

It is natural to assume that a rough surface will give a higher frictional value against slipping than a polished one, but this is not necessarily correct. A roughened surface consists of small hills and dales, only the 'high-spots' making contact. As the amount of friction available for the purpose of taking up the drive is dependent upon the actual surface area in contact, it is obvious that a perfectly smooth face is required to transmit the maximum amount of power for a given surface area.

Since non-metallic facings of the moulded asbestos type have been introduced in service a polished surface is common, but it must not be confused with a glazed surface, which is sometimes encountered due to conditions which will be discussed subsequently.

The ideally smooth or polished condition, therefore, provides proper surface contact, but a glazed surface does not, as it entirely alters the frictional value of the surface, which will result in excessive clutch slip. These two conditions might be simply illustrated by the comparison between a piece of smoothly finished wood and one with a varnished surface. In the former the contact is made directly by the original material, whereas in the latter instance a film of dried varnish is interposed between the contact surfaces and actual contact is made by the varnish.

Thus the conditions encountered are:

(1) After the clutch has been in use for some little time under satisfactory conditions the surface of the facings assumes a high polish through which the grain of the material can be seen clearly. This polished facing is of light colour when in perfect condition.

(2) Should oil in small quantities gain access to the clutch and find its way onto the facings, it will be burnt off as a result of the heat generated by the slipping occurring under normal starting conditions. The burning of this small quantity of lubricant has the effect of gradually darkening the faces, but, provided the polish of the facing remains such that the grain of the material can be distinguished clearly, it has little effect on clutch performance.

(3) Should increased quantities of oil obtain access to the facing, then one of two conditions, or a combination of them, may arise, depending upon the nature of the oil.

(*a*) The oil may burn off and leave a carbon deposit on the surface of the facings, which assume a high glaze and cause further slip. This is a very definite, though very thin, deposit, and in general it hides the grain of the material.

(*b*) The oil may partially burn and leave a resinous deposit on the facings. This has a tendency to produce a fierce clutch, and may also cause excessive 'spinning' on clutch release, due to the tendency of the face linings to adhere to the surface of the flywheel or pressure plate.

(*c*) There may be a combination of conditions (*a*) and (*b*) which produces a tendency to 'judder' on clutch engagement.

(4) Still greater quantities of oil produce a dark and soaked appearance of the facings, and the result will be still further slip, accompanied by fierceness or 'juddering' on engagement, according to the severity of the condition.

If the conditions under (3) or (4) are experienced the clutch driven plate should be replaced by a new one. **The cause of the presence of the oil must be traced and removed.** It is, of course, necessary for the clutch and flywheel to be thoroughly cleaned out before reassembly.

Release bearing

Where the graphite release bearing ring is badly worn in service a complete replacement assembly should be fitted, returning the old assembly for salvage of the metal cup. These graphite rings are shrunk into their metal cups by heating the metal cup to a cherry red before forcing the graphite ring into position. This is a specialized job, but can be carried out provided care is exercised. Immediately the ring is forced into position the whole should be quenched in oil. Alignment of the thrust pad in relation to its face and the trunnions should be within ·005 in. (·13 mm.).

In almost every case of rapid wear on the splines of the clutch driven plates misalignment is responsible.

Looseness of the driven plate on the splined shaft results in noticeable backlash in the clutch. Misalignment also puts undue stress on the driven member, and may result in the hub breaking loose from the plate, with consequent total failure of the clutch. It may also be responsible for a fierce chattering or dragging of the clutch.

In cases of persistent difficulty it is advisable to check the flywheel for truth with a dial indicator to determine any possible misalignment. The dial reading should not vary more than ·003 in. (·08 mm.) anywhere on the flywheel face.

Clutch lever return spring

Should it be necessary to renew a weak or broken clutch lever return spring, this may be accomplished without removal of the clutch shaft or the operating lever.

Unhook the spring end from the lever and lift the locating spigot on the inner end of the spring from its seat in the clutch housing.

The spring may now be unscrewed from the shaft over the operating lever if rotated clockwise.

Section E.8

STARTER RING

Normally the starter ring is serviced as a complete unit with the flywheel. In overseas countries where this is not convenient arrangements have been made to supply the starter rings separate for fitting to the existing flywheel, but as they have to be shrunk on at the right temperature special precautions have to be taken, and these are covered by special instructions obtainable on application to the Nuffield Distributor in the country concerned. No attempt should be made to replace the starter ring on a flywheel unless the special instructions are available and carried out.

Ring and flywheel **assemblies only** are available for the Home market.

Section E.9

CLUTCH JUDDER

In order to eliminate the development of clutch judder later models are fitted with a relay lever (Part No. 182097) with the distance between the hole centres increased to $5\frac{3}{16}$ in. (131·76 mm.) from the original dimension of $4\frac{3}{4}$ in. (120·65 mm.).

The new lever can be substituted for the original lever in cases of persistent clutch judder.

A special engine tie-rod has also been introduced to minimize this trouble and in persistent cases of judder this should be fitted (see Section AA.37).

Section E.10

UNIVERSAL CLUTCH GAUGING FIXTURE

Remove from the box the gauge finger, the pillar, and the actuator, and consult the code card to determine the reference of the adaptor and the spacers appropriate to the clutch which is being serviced.

Rest the base plate on a flat surface, wipe it clean, and place the spacers upon it in the positions quoted on the code card.

Place the clutch on the spacers, aligning it with the appropriate tapped holes in the base, arranging it so that the release levers are as close to the spacers as possible.

Screw the actuator into the centre hole in the base plate and press the handle down to clamp the clutch. Then screw the set bolts provided firmly into the tapped holes in the base plate, using the speed brace; remove the actuator.

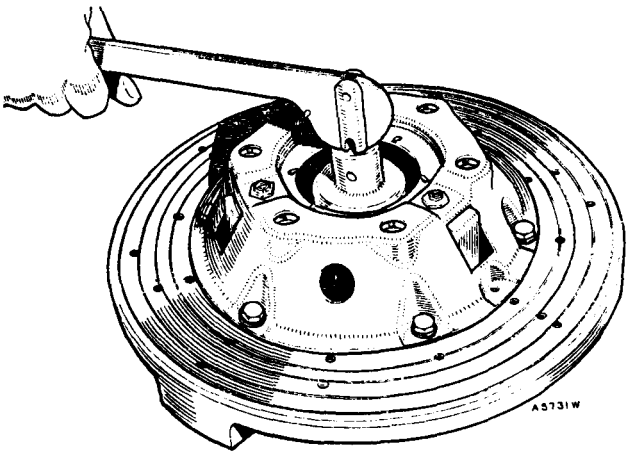

Fig. E.8

Using the actuator to compress the clutch springs for dismantling or setting the assembly

Remove the adjusting nuts and gradually unscrew the set bolts to relieve the load of the thrust springs. Lift the cover off the clutch and carry out whatever additional dismantling may be desired.

After carrying out the necessary servicing of the clutch components, reassemble the parts on the clutch pressure plate, place the cover upon it, and transfer the assembly to the base plate resting on the spacers and aligned correctly.

Carefully bolt the cover to the base plate and screw the adjusting nuts onto the eyebolts until flush with the tops of the latter.

Screw the actuator into the base plate (Fig. E.8) and pump the handle a dozen times to settle the clutch mechanism. Remove the actuator.

Screw the pillar firmly into the base and place upon it the appropriate adaptor, recessed face downwards, and the gauge finger (Fig. E.9).

Turn the adjusting nuts until the finger just touches the release levers, pressing firmly downwards on the finger assembly to ensure that it is bearing squarely on the adaptor.

Remove the finger, adaptor, and pillar, replace the actuator, and operate the clutch a further dozen times. Replace the pillar and check the lever setting, making any final corrections.

Finally, lock the adjusting nuts.

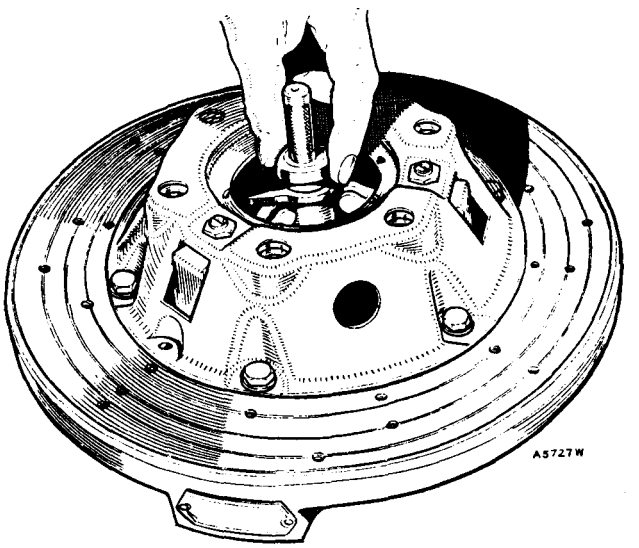

Fig. E.9

Checking the setting of the release levers

SECTION EE

THE CLUTCH

OF THE MORRIS MINOR (Series II) AND MORRIS MINOR 1000

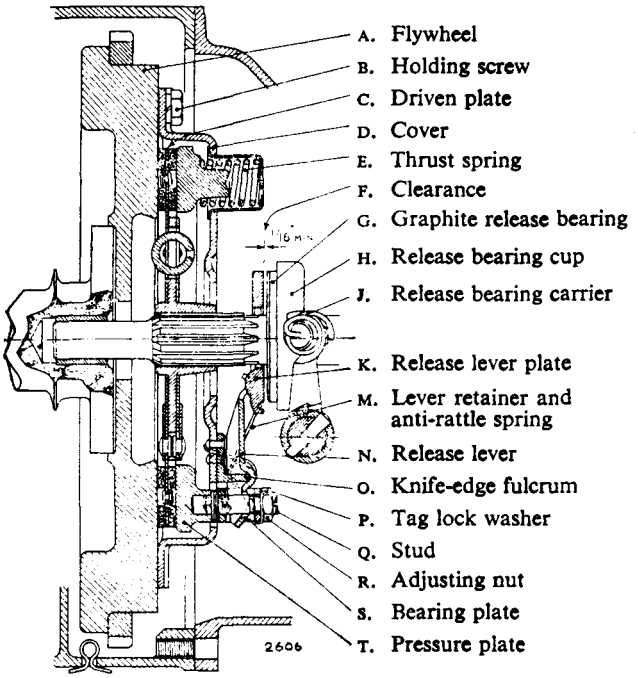

Fig. EE.1

The clutch unit in section (earlier cars)

Section EE.1

GENERAL DESCRIPTION

The clutch fitted to the Morris Minor (Series II and earlier 1000) is of the same type as that fitted to the Morris Minor (Series MM), and the instructions given in Section E may be followed when dealing with both models. It should be noted, however, that the clutch linkage mechanism is not the same, and when dealing with the Morris Minor (Series II and 1000) the appropriate paragraphs of Section EE.2 should be referred to.

Section EE.2

RUNNING ADJUSTMENTS

As the clutch facings on the driven plate (C) wear, the pressure plate (T) moves closer to the flywheel face (A) and the outer or shorter ends of the release levers follow. This causes the inner or longer ends of the levers to travel farther towards the gearbox and decreases the clearance between the release lever plate (K) and the release bearing (G). The effect on the clutch pedal is to decrease the clearance or free travel; in other words, it reduces the distance the clutch pedal moves forward before the release bearing comes into contact with the release lever plate. Some free movement must always be maintained here to prevent the clutch pedal riding against the under side of the toeboard and applying pressure on the release bearing, thus causing the clutch to slip, and to prevent excessive travel of the withdrawal mechanism leading to coil binding of the clutch springs. This essential free movement is restored by adjusting the locknuts on the forward end of the clutch operating rod.

Insufficient pedal backlash or free movement will cause clutch slip. Excessive pedal movement causes the clutch springs to become compressed solid or 'coil-bound', which imposes an undue load on the release bearing, causing excessive wear.

The required pedal travel is the sum of:

(1) *The free movement* or travel produced by the clearance between the release bearing and the release lever plate necessary to ensure that the clutch is fully engaged when the foot is removed from the pedal.

(2) *The effective movement* or travel necessary to release the clutch, i.e. the amount of effective pedal movement necessary to move the release lever plate the distance required to free the clutch completely.

The free pedal movement, measured at the pedal pad, is given in the **'GENERAL DATA'**. It is essential that this clearance be adhered to in order to allow the clutch to be completely released and at the same time prevent the possibility of damage to the clutch release bearing due to over-travel.

The clutch is adjusted by releasing the locknut on the clutch operating rod. The spherical adjusting nut may then be screwed in the required direction. If the backlash is insufficient it will be increased by moving

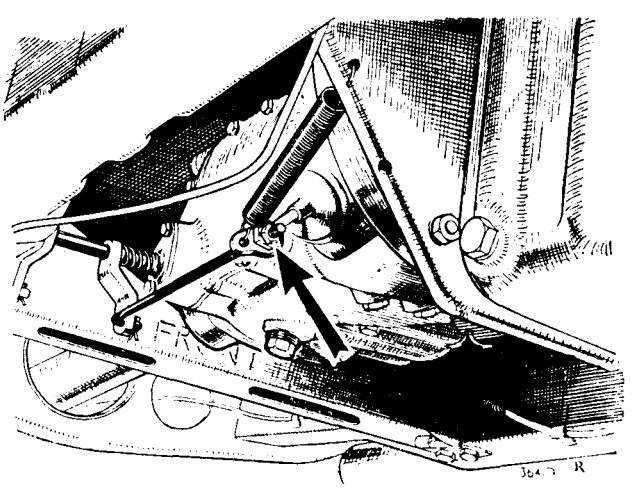

Fig. EE.2

The clutch is adjusted by releasing the locknut on the clutch operating rod and screwing or unscrewing the spherical adjusting nut

the adjusting nut towards the front of the car, and vice versa. Do not forget to retighten the locknut.

If any difficulty is experienced in freeing the clutch when the correct free pedal movement is provided, on no account should efforts be made to improve matters by attempting to increase the effective pedal travel. The actual cause must be ascertained and rectified.

Section EE.3

REMOVAL OF THE CLUTCH

Remove the gearbox as in Section FF.1.

The clutch cover-plate assembly is removed by extracting the six bolts locating it to the flywheel. These should be slackened, part of a turn at a time to prevent distortion of the flanged edge of the cover by the pressure of the thrust springs, until the spring pressure is completely released.

The complete clutch may now be lifted off the two dowel pins, all components except the driven plate remaining assembled to the cover.

Section EE.4

CLUTCH OPERATING ROD

Cars from No. 198690 onwards are fitted with modified clutch operating rods which are $\frac{5}{16}$ in. diameter as compared with the $\frac{1}{4}$ in. diameter of the earlier type.

This increase in diameter also necessitates the use of modified pedal and relay shafts, and when replacement parts are supplied for cars prior to No. 198690 they will be of the new type and the remaining parts of the clutch operating mechanism will also be supplied.

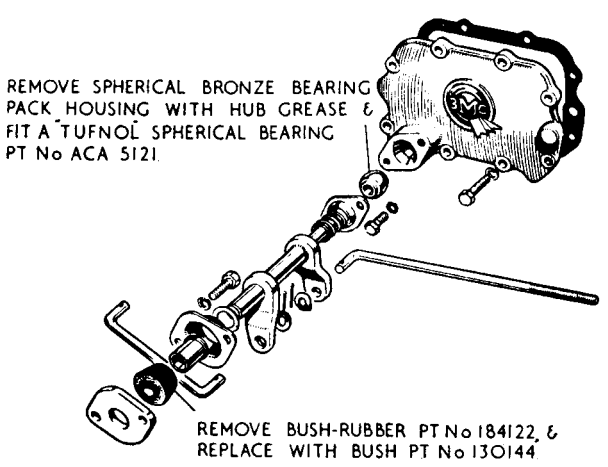

Fig. EE.3

The location of the spherical bearing and rubber bush on the relay clutch shaft

Section EE.5

CLUTCH RELAY SHAFT ASSEMBLY

In order to cure any tendency to rattle in the clutch relay shaft assembly a Tufnol spherical bearing (Part No. ACA 5121) has been introduced which is interchangeable with the existing bronze bearing (Part No. 184123) on the inner end of the shaft.

At the outer end of the shaft a harder rubber bush (Part No. 130144) replaces the original bush (Part No. 184122) and both these modified parts should be fitted at the same time.

Section EE.6

RESPACED PEDALS

On later R.H.D. cars a new clutch pedal assembly is introduced together with a new gearbox cover with a separate master cylinder cover-plate. The new clutch pedal and shaft are now fitted outside the right-hand longitudinal member with a pedal spacer inside the member in place of the original clutch pedal. The brake pedal and clutch linkage remains unchanged and the new pedal assembly is retained by a locating washer, plain washer, slotted nut, and split pin.

On L.H.D. cars the current-type R.H.D. brake pedal replaces the original brake pedal, the clutch pedal pad has been repositioned to the left-hand side of the clutch lever, and a modified accelerator pedal is introduced.

Individual parts are not interchangeable but the assembly can be fitted to earlier cars in its complete form.

The new parts for R.H.D. cars are as follows:

Description	*Part No.*
Combined clutch pedal and shaft ..	ACA 5222
Pedal spacer	133582
Locating washer	ACA 5228
Plain washer	PWZ 106
Slotted nut	FN 406
Split pin	ZPS 0206
Pedal sealing pad	ACA 5226
Gearbox cover	ALA 834
Master cylinder cover-plate	ALA 832

The new parts for L.H.D. cars are as follows:

Accelerator pedal assembly	ACA 5227
Gearbox cover	ALA 835
Master cylinder cover-plate	ALA 833
Brake pedal	128641

THE CLUTCH COMPONENTS
(Later Cars)

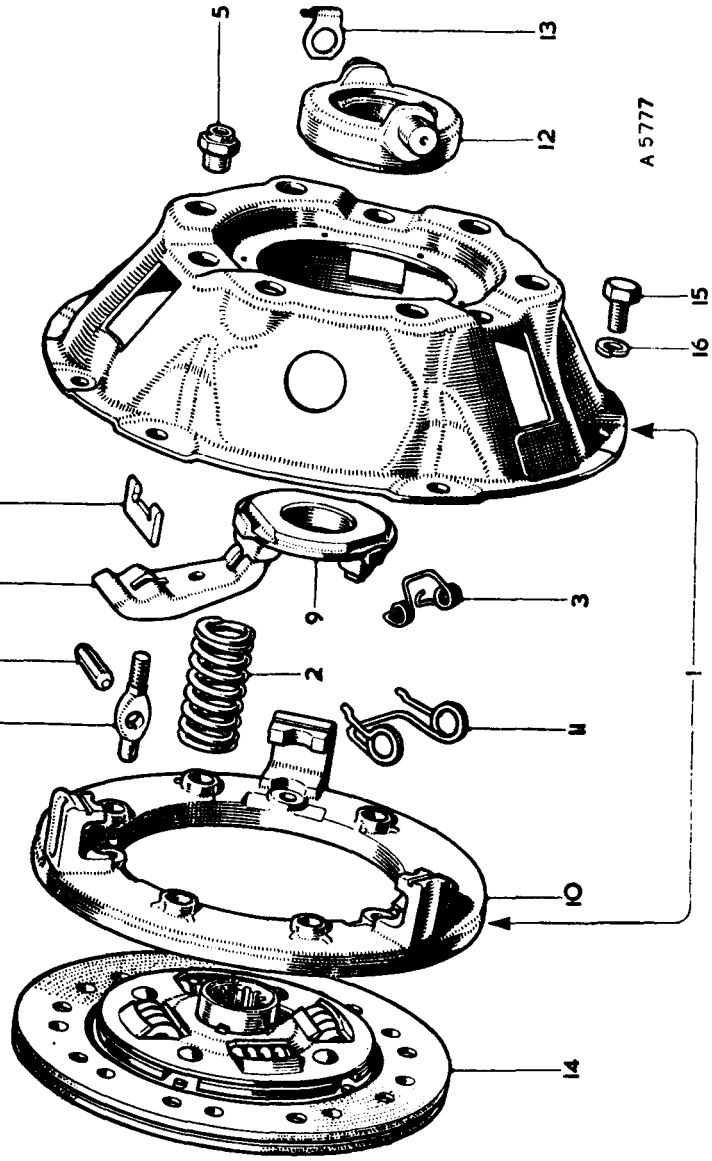

KEY TO THE CLUTCH COMPONENTS
(Later Cars)

No.	*Description*	*No.*	*Description*	*No.*	*Description*
1.	Clutch assembly.	7.	Strut.	12.	Release bearing.
2.	Thrust spring.	8.	Release lever.	13.	Retainer.
3.	Release lever retainer.	9.	Bearing thrust plate.	14.	Driven plate assembly.
4.	Eyebolt.	10.	Pressure plate.	15.	Clutch to flywheel screw.
5.	Eyebolt nut.	11.	Anti-rattle spring.	16.	Spring washer.
6.	Release lever pin.				

Section EE.7

MODIFIED CLUTCH LINKAGE

Commencing at Car Nos. 577816 (R.H.D.), 578027 (L.H.D.), and Traveller Cars 572278 (R.H.D.), 572832 (L.H.D.), connecting plates (Part No. ACA 5437) are introduced to strengthen the clutch linkage. They are interchangeable with the original rod linkage, but only as a complete assembly, i.e. clutch pedal assembly, clutch relay shaft, and the new connecting plates.

Section EE.8

CLUTCH
(Later Cars)

Removing

Remove the clutch as described in Section EE.3.

Dismantling

The clutch tool 18G 99 A proves an efficient and speedy means of dismantling, reassembling, and adjusting the clutch with a high degree of accuracy. The tool is universal and a chart detailing the sizes of spacing washers and distance pieces for particular types of clutch is provided on the inside of the metal container lid.

Consult the code card to determine the correct spacers for the particular clutch. Place the spacers on the base plate in the positions indicated on the code card and place the clutch on the spacers. Screw the actuator into the central hole in the base plate and press the handle to clamp the clutch. Screw the set bolts firmly into the base plate. The clutch can now be compressed or released as required.

Compress the clutch with the actuator and remove the adjusting nuts gradually to relieve the load of the thrust springs. Lift the cover off the clutch and carry out whatever additional dismantling may be necessary.

Reassembling

Parts not being replaced by new ones must be refitted in their original positions.

Reassembly is the reverse of the dismantling procedure.

Adjusting the clutch

The clutch must now be adjusted, still using the clutch assembly tool. With the clutch bolted to the tool base plate, as on completion of assembly, proceed as follows. Screw the actuator into the base plate and pump the handle a dozen times to settle the clutch mechanism. Remove the actuator. Screw the tool centre pillar into the base plate and select a distance piece, as shown on the chart. Place the distance piece over the centre pillar with its recessed face downwards. Place the gauge height finger over the centre pillar. Adjust the height of the release levers by tightening or loosening the adjusting nuts until the height finger, when rotated, just contacts the highest point on the tip of each release lever. Press downwards on the height finger to ensure that it bears squarely on the adaptor while rotating. Remove the height finger and pillar, and screw the actuator into the base plate. Operate the clutch several times to enable the components to settle on their knife-edges. Remove the actuator and replace the centre pillar, distance piece, and height finger. Readjust the release levers if necessary. Repeat the procedure to ensure that the release levers are finally seated, and gauge once more. Remove the centre pillar, distance piece, and height finger and secure the adjusting nuts. Fit the release lever plate on the tips of the release levers and secure it by the three retaining springs. Release the tool set screws in diagonal sequence a little at a time, relieving pressure slowly and evenly. Remove the clutch assembly from the base plate.

Refitting

Refitting is a reversal of the removal procedure. Use Service tool 18G 139 for clutch centralization.

SECTION F

THE GEARBOX
OF THE MORRIS MINOR (Series MM)

THE GEARBOX COMPONENTS

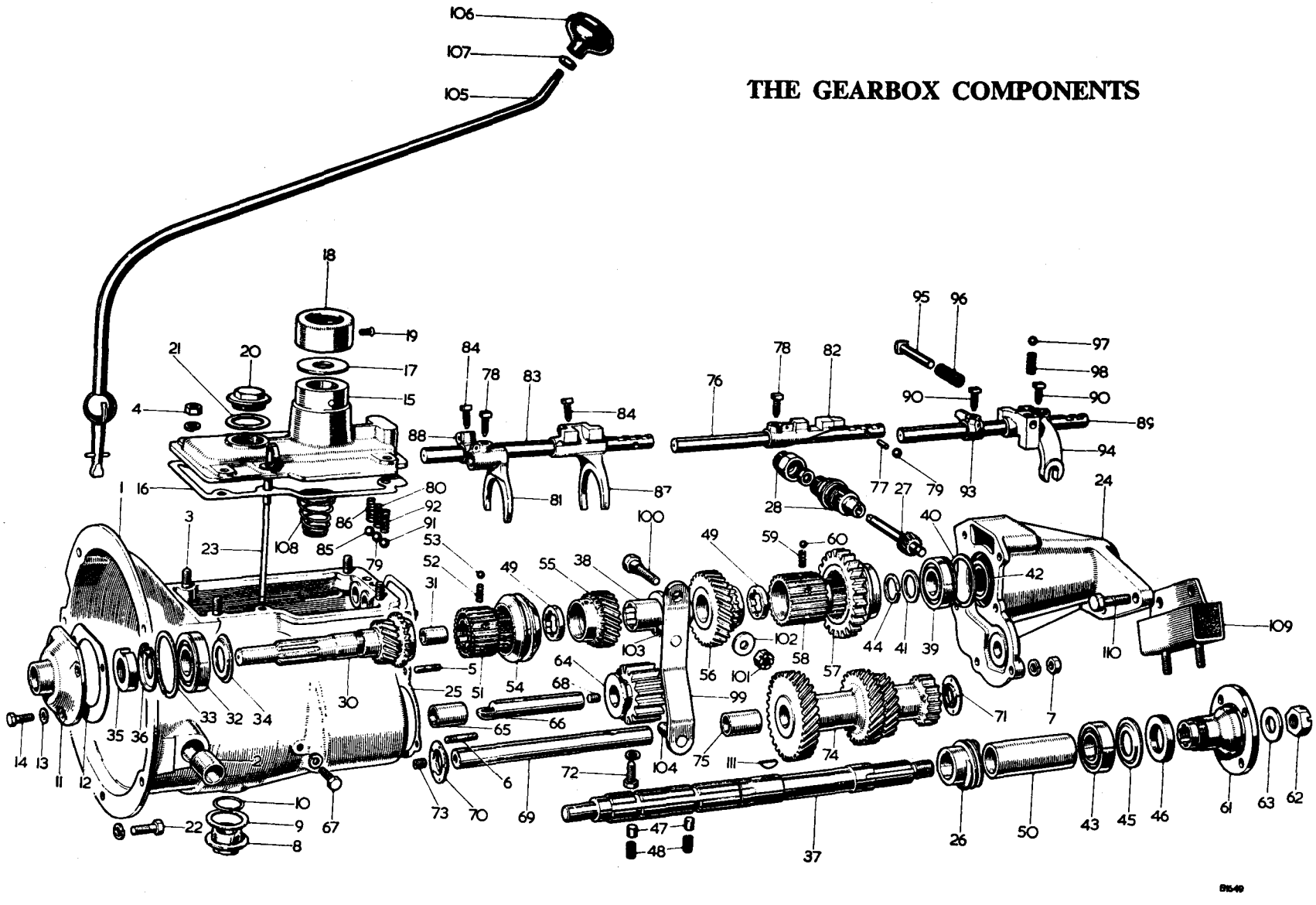

KEY TO THE GEARBOX COMPONENTS

No.	Description
1.	Casing—gearbox.
2.	Bush—clutch withdrawal shaft.
3.	Stud—gearbox cover.
4.	Nut—gearbox cover stud.
5.	Stud—speedometer casing—short.
6.	Stud—speedometer casing—medium.
7.	Nut—speedometer casing stud.
8.	Plug—oil drain.
9.	Washer—oil drain plug.
10.	Circlip—oil drain plug.
11.	Cover—oil seal—drive gear.
12.	Joint—oil seal cover.
13.	Washer—copper—oil seal cover.
14.	Bolt—oil seal cover.
15.	Cover—gearbox top.
16.	Joint—gearbox top cover.
17.	Washer—felt—top cover to lever.
18.	Retainer—gear lever.
19.	Screw—lever retainer.
20.	Plug—oil filler (with baffle).
21.	Washer—oil filler plug.
22.	Bolt—casing to sump.
23.	Indicator—oil level.
24.	Casing—speedometer drive.
25.	Gasket—speedometer drive casing.
26.	Gear—speedometer drive.
27.	Pinion—speedometer drive and shaft.
28.	Bearing—speedometer drive pinion.
30.	Drive gear.
31.	Bush—drive gear.
32.	Bearing—drive gear.
33.	Circlip—drive gear bearing.
34.	Guard—drive gear bearing.
35.	Nut—drive gear bearing.
36.	Tab washer—drive gear bearing nut.
37.	Mainshaft.
38.	Bush—mainshaft.
39.	Bearing—mainshaft—intermediate.
40.	Circlip (rear)—mainshaft bearing—intermediate.
41.	Plate—bearing.
42.	Spring plate—bearing.
43.	Bearing—mainshaft—rear.
44.	Circlip (front)—mainshaft bearing—intermediate.
45.	Guard—mainshaft bearing—rear.
46.	Felt—mainshaft bearing—rear.
47.	Plunger—mainshaft.
48.	Spring—mainshaft plunger.
49.	Washer—thrust.
50.	Distance piece—mainshaft.
51.	Sliding hub and cone.
52.	Spring—sliding hub.
53.	Ball—sliding hub.
54.	Striking dog—top and third.
55.	Gear—third speed.
56.	Gear—second speed (with cone).
57.	Gear—first speed.
58.	Sliding hub and cone—first and second.
59.	Spring—sliding hub.
60.	Ball—sliding hub.
61.	Flange—universal joint.
62.	Nut—universal joint flange.
63.	Washer—universal joint flange.
64.	Gear—reverse.
65.	Bush—reverse gear.
66.	Shaft—reverse gear.
67.	Screw—reverse gear shaft securing.
68.	Plug—reverse gear shaft end.
69.	Layshaft.
70.	Thrust washer—layshaft—front.
71.	Thrust washer—layshaft—rear.
72.	Set screw—layshaft retaining.
73.	Plug—layshaft end.
74.	Layshaft gear unit.
75.	Bush—layshaft gear unit.
76.	Shifter shaft—top and third.
77.	Pin—interlocking.
78.	Screw—shifter and selector attaching.
79.	Ball—interlocking.
80.	Spring—selector shaft ball.
81.	Shifter—gear—third and fourth.
82.	Selector—gear—third and fourth.
83.	Shifter shaft—first and second.
84.	Screw—retaining—stop and shifter.
85.	Ball—selector shaft locating.
86.	Spring—selector shaft locating ball.
87.	Shifter—gear—first and second.
88.	Stop—gear shifter—second gear.
89.	Shifter shaft—reverse.
90.	Screw—retaining—stop and shifter.
91.	Ball—selector shaft locating.
92.	Spring—selector shaft locating ball.
93.	Steady—selector shaft.
94.	Selector—reverse gear.
95.	Plunger—reverse gear safety.
96.	Spring—reverse gear safety plunger.
97.	Ball—plunger locating.
98.	Spring—plunger locating ball.
99.	Shifter lever—reverse.
100.	Pin—shifter lever.
101.	Nut—shifter lever pin.
102.	Washer—shifter lever pin.
103.	Pin—shifter lever centre.
104.	Pin—shifter lever bottom.
105.	Change speed lever.
106.	Change speed lever knob.
107.	Locknut—change speed lever knob.
108.	Spring—change speed lever support.
109.	Mounting rubber—rear.
110.	Bolt—rubber to gearbox.
111.	Key—mainshaft.

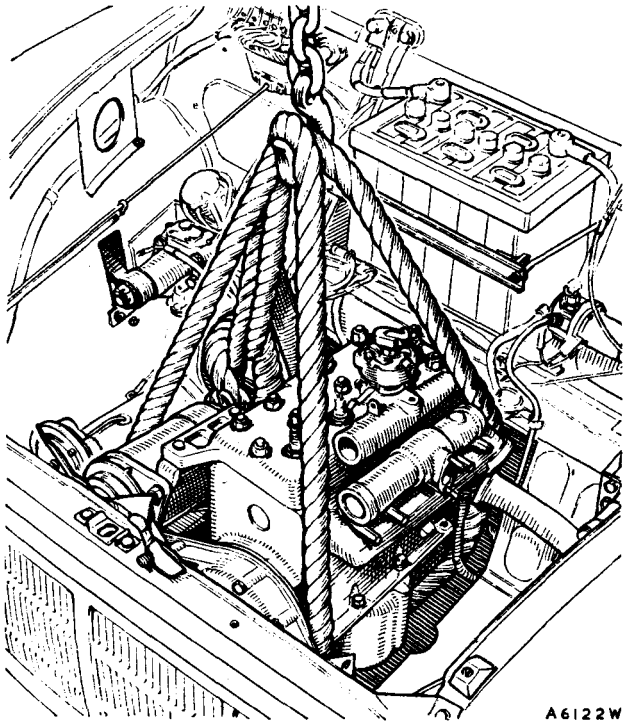

Fig. F.1

The weight of the power unit should be taken by suitable lifting tackle as shown

GENERAL DESCRIPTION

The gearbox has four forward gears and one reverse gear.

Synchromesh is incorporated on second, third, and fourth gears.

Top gear is obtained by direct drive, third and second through gears in constant mesh, and first and reverse by sliding spur gears.

Section F.1

REMOVAL AND REPLACEMENT OF THE GEARBOX

Lift out the front floor mat. Remove the left-hand-side front seat by undoing the four $\frac{3}{16}$ in. bolts and clips locating the seat to the floor of the car.

Detach the gear lever knob by slackening its locknut and remove the gearbox rubber cowl.

Remove the gearbox cover by undoing the eight hexagon-headed brass fixing bolts and washers securing it to the floor. Note that four bolts in the centre of the cover are long ones and screw into the gearbox support cross-member.

Disconnect the speedometer cable from its drive at the rear of the gearbox.

Extract the split pin and anti-rattle washer from the clutch operating lever link and disconnect the link from the lever.

Extract the split pins from the four $\frac{1}{4}$ in. bolts on the front universal joint driving flange and remove the bolts and nuts. Some models are fitted with patent self-locking nuts without split pins.

Support the engine with suitable lifting tackle. If a lifting ring is employed it should form part of a plate which can be fitted under two of the stud nuts.

Undo the bolts securing the left-hand-side and right-hand-side flexible mounting brackets to the gearbox and withdraw the four bolts inserted from below the cross-member securing it to the frame. Withdraw the cross-member and mounting rubbers, disconnect the exhaust pipe flange, drain the radiator, disconnect the top water hose, slacken the nuts securing the engine to the front flexible rubbers, and lower the gearbox. Remove the seven $\frac{1}{4}$ in. bolts locating the clutch housing to the engine.

With the engine supported, the gearbox may now be withdrawn from the two dowel pins locating it to the flywheel housing and lifted clear of the car.

The gearbox may be replaced by reversing the above procedure if attention is given to the following points.

When aligning the gearbox drive shaft with the clutch and flywheel care should be exercised to ensure that the weight of the gearbox is not allowed to hang on the hub of the driven plate and that the plate is not displaced.

Engage a gear and rotate the propeller shaft flange

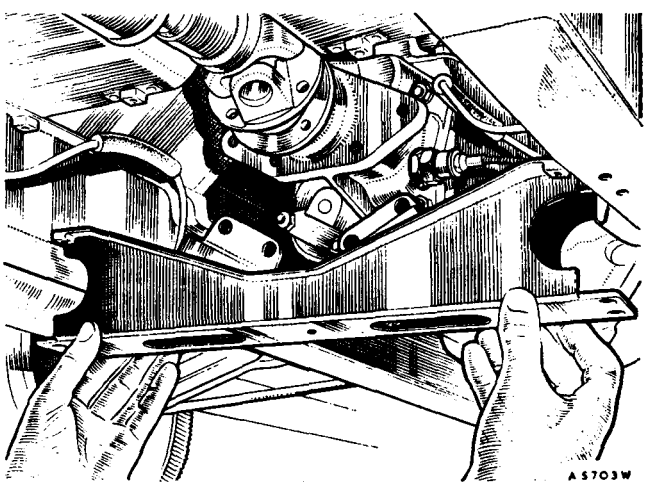

Fig. F.2

The body cross-member passing under the gearbox must be withdrawn

in order to engage the gearbox drive shaft with the splines in the clutch driven plate.

When the gearbox drive shaft has been aligned with the clutch and flywheel the gearbox assembly should be rotated to align the dowel pins in the flywheel housing with the dowel holes of the clutch housing and the gearbox assembly moved forward into position.

When replacing the clutch housing locating bolts care should be exercised in fitting the respective sizes in their correct positions. The four short bolts locate the clutch housing to the cylinder block and the three long bolts locate the clutch housing to the sump. The bolt in the left-hand side of the sump housing also secures the tappet cover breather pipe clip.

When recoupling the speedometer drive make sure that the speedometer cable is devoid of sharp bends.

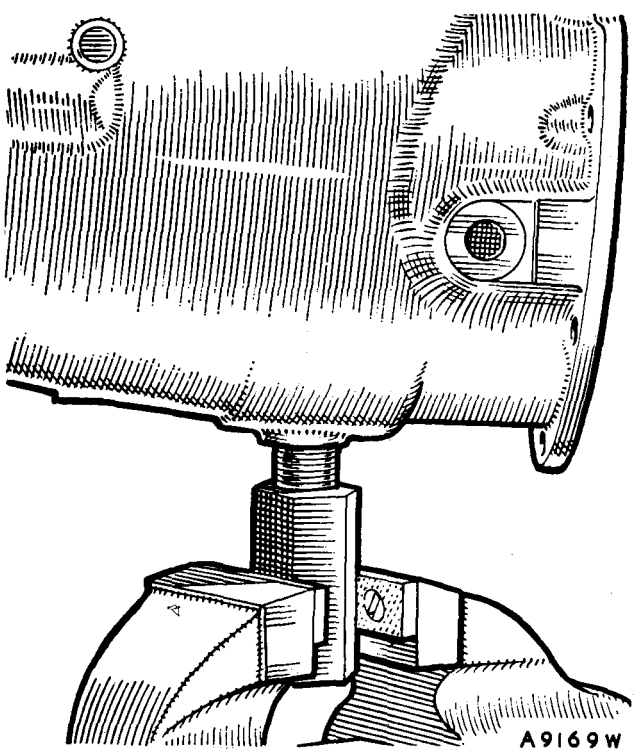

Fig. F.3

A plug threaded into the drain plug hole is used to support the gearbox in a vice

Section F.2

DISMANTLING AND REASSEMBLING THE GEARBOX

Drain oil from the gearbox.

When dismantling the gearbox it will be found advantageous to support it in a vice by means of a piece of steel bar, approximately 1½ in. (40 mm.) square by 5 in. (120 mm.) long, this being turned down and threaded at one end (30 mm.×2 mm. pitch thread) to enable it to be screwed into the gearbox drain plug hole (see Fig. F.3).

Remove the circlip at the left-hand side of the clutch operating fork shaft.

Release the clutch operating lever return spring (Section E.7) and remove the clutch thrust pad by extracting the two retaining springs.

Extract the clutch fork locating taper pin, driving this upwards by inserting a suitable pin punch through the clutch housing drain hole. The clutch operating shaft may then be tapped out with the aid of a suitable drift towards the right-hand side.

Detach the gearbox drive shaft bearing oil seal cover from the front of the gearbox by removing the three $\frac{3}{16}$ in. fixing bolts, observing that the two top bolts are equipped with spring washers and the bottom bolt with a plain copper washer.

Extract the split pin from the ½ in. nut retaining the driving flange at the rear of the gearbox mainshaft and remove the nut and the plain steel washer. Using a suitable extractor, withdraw the driving flange.

Remove the speedometer pinion assembly by unscrewing the ½ in. hexagon, enabling the assembly to be withdrawn from the housing. (Note that the first hexagon is a retaining nut for the oil seal and that the second hexagon beneath it releases the pinion assembly from the box.)

Release the speedometer drive housing from the rear of the gearbox by removing the six ¼ in. nuts and spring washers from their locating studs. Note that a paper gasket is fitted between the joint faces.

The felt oil-retaining washer is fitted behind the mainshaft rear bearing at the rear of the speedometer drive housing. If a replacement is being fitted it is essential to see that the outer edge of the washer is right home in the recess provided.

Note that a plain steel washer is fitted in the register for the gearbox mainshaft bearing at the forward end of the speedometer drive housing. Remove the bearing guard, noting that the dished portion goes towards the bearing. Using a suitable extractor, withdraw the bearing from the rear end of the mainshaft and remove the distance piece and speedometer drive gear.

With the change speed lever in the neutral position, undo the four ¼ in. nuts evenly until they can be removed. Lift off the gearbox cover, taking care to hold the selector springs so that they do not fall into the gearbox.

Extract the lock wire from the six square-headed screws locating the gear shifters, etc., to the selector shafts and remove the screws.

Withdraw the selector shafts one at a time, exercising care not to lose the lock balls in the process. Reference to Fig. F.5 will show the positions of the various lock

balls and springs. The selector forks may now be extracted. Particular note should be made of the correct location of the various selector forks on the selector shafts (see Fig. F.4).

Remove the $\frac{3}{16}$ in. layshaft spindle dowel bolt located in the base of the gearbox casing at the rear. Using a suitable copper or brass drift, extract the spindle, tapping it from the forward end, thus allowing the layshaft gear unit to drop to the bottom of the gearbox.

Special extractor 68825 should be used to extract the gearbox drive assembly from its housing.

The gearbox mainshaft and ball bearing is now tapped gently from its housing towards the rear of the gearbox, using a suitable copper or brass drift, and the bearing withdrawn from the shaft, together with the bearing plate fitted inside the gearbox against the circlip. The mainshaft complete with gears is now extracted from the inside of the gearbox (see Fig. F.6). The layshaft gear unit, which has a thrust washer fitted at each end, may now be removed.

Extract the split pin from the $\frac{1}{4}$ in. bolt and undo the bolt and nut locating the reverse gear shifter to the side of the gearbox. The reverse gear can then be removed from its spindle. The spindle is extracted by removing the $\frac{3}{16}$ in. dowel bolt from the left-hand side of the gearbox and gently tapping the spindle from the forward end, using a suitable copper drift for the purpose.

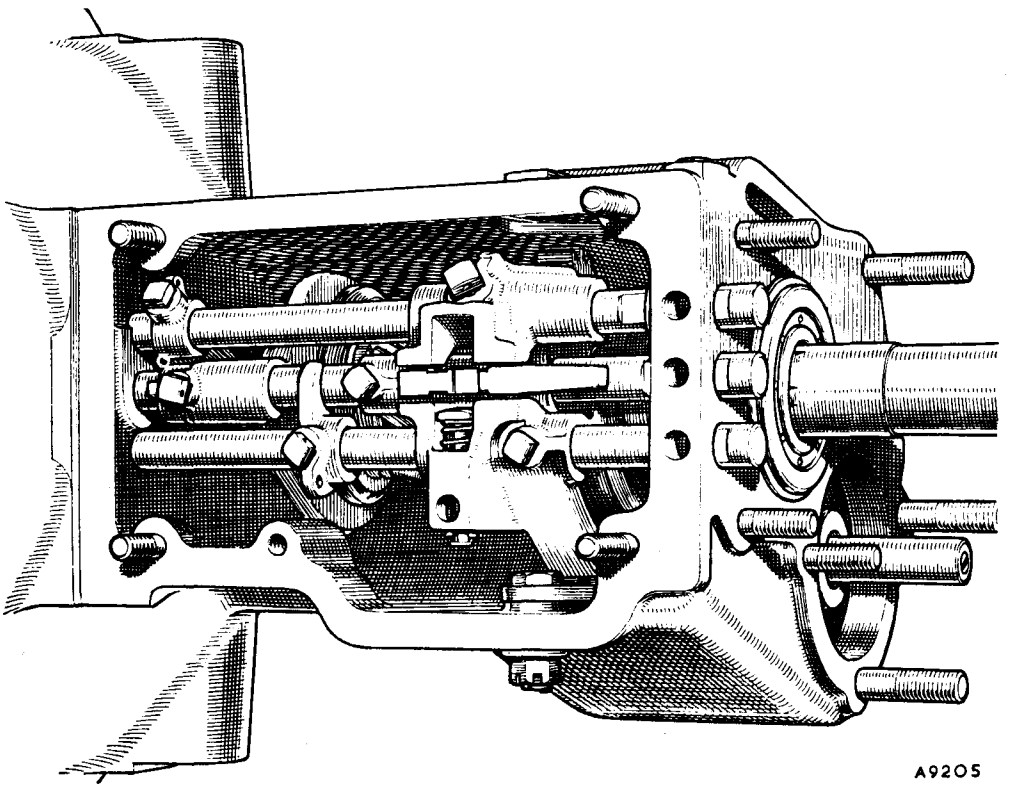

Fig. F.4
The positions of the selectors and stops are clearly shown in this illustration and that on page F.10

Reassembly

With the various sub-assemblies built up in accordance with the instructions given in their appropriate sections, reassemble the gearbox in the following manner:

(1) Refit the reverse gear and selector fork.

(2) The layshaft gear unit, together with the correct-sized thrust washer at either end, is next placed in position on the bottom of the gearbox. The layshaft spindle is not inserted until the mainshaft assembly and drive gear have been installed.

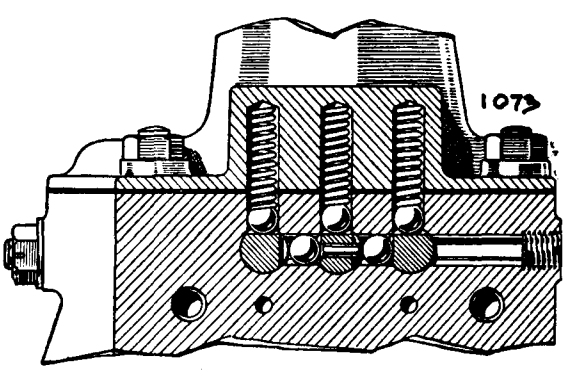

Fig. F.5
This illustrates clearly the position of the selector lock balls and the interlocking balls and plunger

(3) The mainshaft is entered into the gearbox casing, the drive gear assembly fitted in position, and the bearing front cover replaced. The mainshaft bearing is now located in its housing at the rear of the gearbox.

(4) When fitting the layshaft spindle raise the layshaft gear unit with a suitable tapered mandrel and insert the spindle from the rear of the gearbox. Care must be taken to see that the dowel bolt hole in the spindle is lined up to correspond with the bolt hole in the gearbox casing and that the end-thrust washers are correctly fitted.

(5) When reassembling the selector mechanism it should be refitted in the following order.

Replace the first and second and third and top gear selector forks. Insert the selector shafts with the interlocking ball between them and replace the selectors and stops.

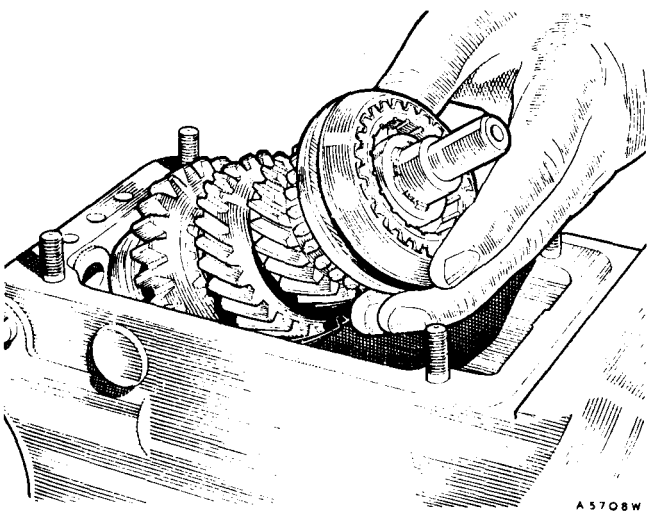

Fig. F.6

Showing the method of withdrawing the mainshaft assembly from the gearbox

Replace the selector shaft interlocking ball and push the reverse gear selector shaft through its selector and stop, taking care that the selector fork engages the pin on the reverse gear shifter lever.

The remainder of the reassembly is carried out in the reverse order to that of dismantling.

Refill the gearbox with oil to Ref. B (page P.2).

Section F.3

DISMANTLING AND REASSEMBLING THE MAINSHAFT ASSEMBLY

To dismantle the gearbox mainshaft assembly withdraw the top and third gear synchromesh hub from the forward end of the shaft, observing that the plain side of the hub faces to the rear of the gearbox.

Remove the third speed gear collar by pressing down the spring-loaded locating plunger and rotate the collar until the splines register with those on the shaft. The third gear may now be withdrawn from its bush. Care must be exercised not to lose the plunger or the spring.

In order to remove the second gear synchromesh hub unit it is necessary to extract the third and second gear bush from the shaft.

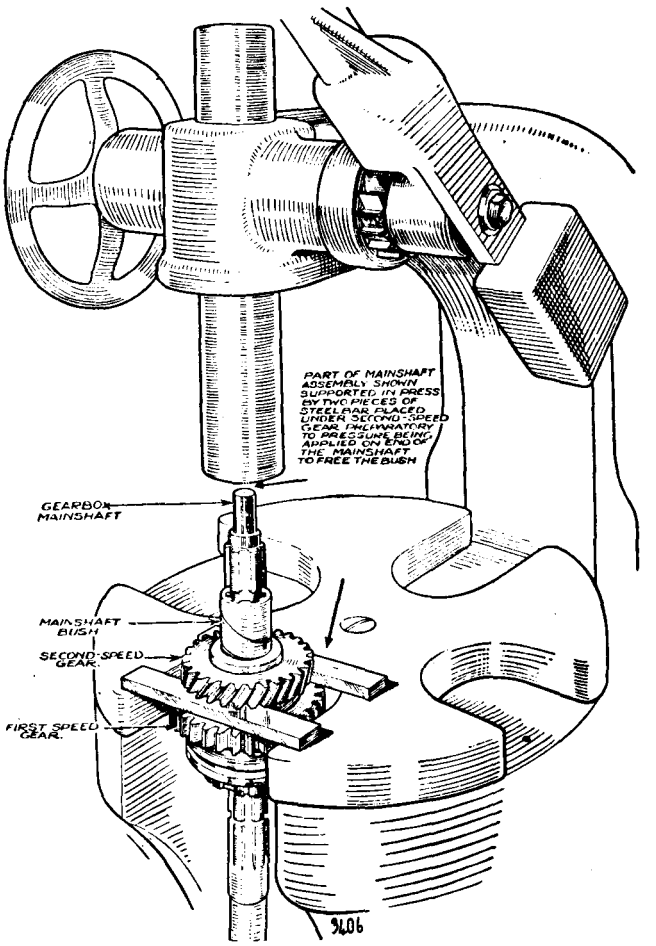

Fig. F.7

The mainshaft is withdrawn from the second gear bush in the manner here illustrated

The mainshaft is placed in a press with the second speed gear supported by suitable steel packings, and the shaft pressed downwards in order to extract the bush together with the gear from the forward end of the shaft. Reference to Fig. F.7 will demonstrate how this operation is carried out.

To remove the second gear synchromesh hub unit extract the second speed gear collar by pressing down the spring-loaded locating plunger and rotate the collar

until the splines register with those on the shaft. The synchromesh hub may then be withdrawn from the shaft.

If it is necessary to separate the striking dog from either of the synchromesh hub and cone assemblies the assembly should be wrapped with a suitable piece of cloth in order to retain the six balls and springs which are located in each hub.

The hub is then pushed through the striking dog.

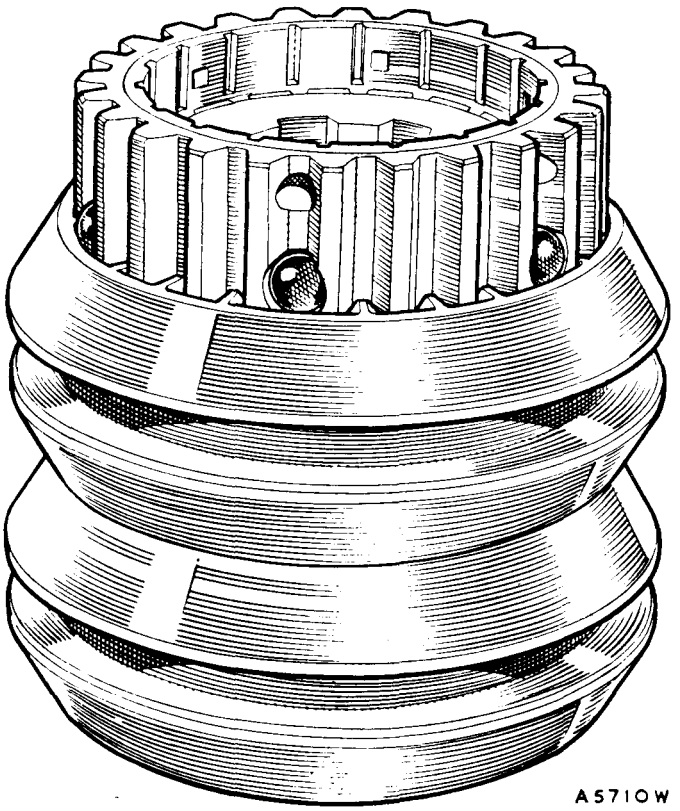

Fig. F.8

The method of reassembling the synchromesh hub assembly in order to keep the locating balls and their springs under control. A striking dog with six teeth relieved by grinding is used to lead the balls into their housings

When reassembling the synchromesh hub the use of a slave striking dog with six of its teeth relieved to provide a 'lead in' for the balls and springs is required.

When the slave striking dog has been passed into position it is followed up by the actual striking dog, which then passes easily over the locking balls (see Fig. F.8).

Reassembly of the mainshaft is a reversal of the dismantling procedure, but care should be taken to ensure that the synchromesh hubs slide freely on the mainshaft splines and that the second and third speed gears are free on their bush.

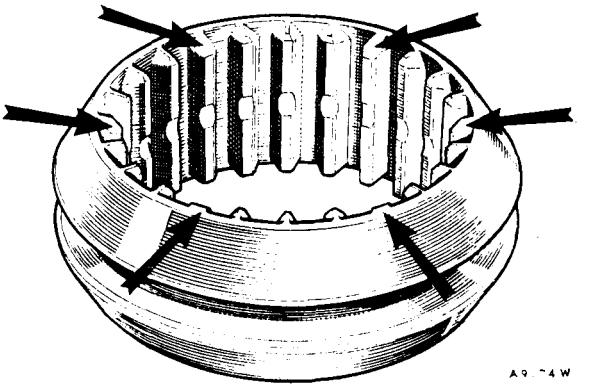

Fig. F.9

The slave striking dog, showing its six relieved teeth

Section F.4

DISMANTLING AND REASSEMBLING THE DRIVE GEAR ASSEMBLY

Tap back the lock washer and remove the securing nut and lock washer.

NOTE.—The securing nut has a left-hand thread.

Press off the bearing from the drive gear and remove the bearing guard.

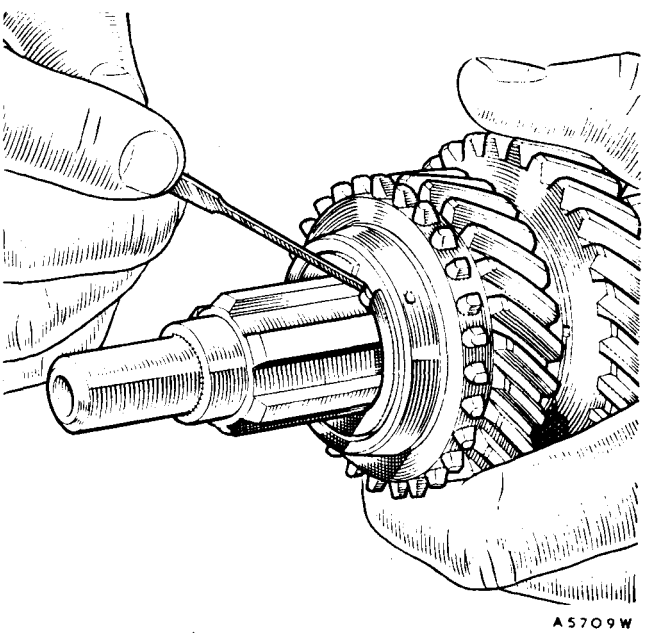

Fig. F.10

Showing the spring-loaded locating plunger for the third gear

Reassembly of the drive gear is in the reverse order to the above. The bearing guard should be fitted with the convex side towards the bearing.

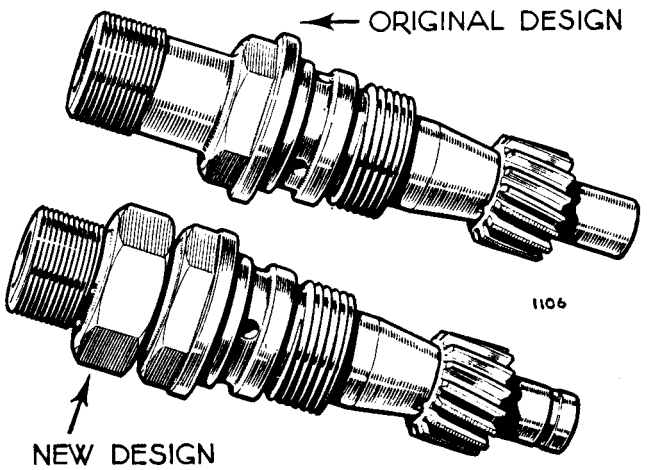

Fig. F.11

The original and modified speedometer drives are easily distinguished from one another by the double hexagon of the new

Section F.5

SPEEDOMETER DRIVE ASSEMBLY

On the first Morris Minor cars some trouble was revealed in connection with sticking speedometer needles or erratic speedometer action. This trouble was traced to oil leakage from the gearbox speedometer drive which finally found its way into the speedometer head, and a modified speedometer drive assembly was evolved to overcome this trouble.

the cable should be disconnected at its junction to the gearbox drive and examined. If there is no sign of oil having found its way into the casing (distinguished by its dark colour as distinct from the light colour of the grease normally used) the cable drive is satisfactory and the cable may be replaced without further attention.

If, on the other hand, oil has found its way into the casing the cable should be withdrawn from the casing and both washed out in petrol thoroughly. Before replacing the cable into the casing both must be dried thoroughly and the cable must be coated with high-melting-point grease.

If oil has found its way into the speedometer head, indicated by the faulty functioning of the speedometer, the speedometer must be replaced by a new one.

In every case where oil has found its way into the speedometer casing the speedometer drive assembly must be removed from the gearbox and a modified assembly fitted. It is, in fact, advisable to replace all old-type drives by one of the new type.

When changing the speedometer drive employ the following procedure:

(1) Remove the existing speedometer drive, including the pinion and its bearing.

(2) Assemble a modified speedometer drive bearing (Part No. 31440) to a modified speedometer pinion (Part No. 31439).

(3) Fit a Gaco oil seal (Part No. 162285) on the end of the speedometer pinion shaft with the knife-edge of the seal facing inwards towards the recess in the speedometer spindle bearing, **taking care not to damage the knife-edge of the oil seal during its insertion over the pinion spindle.** The use of a thimble is advised.

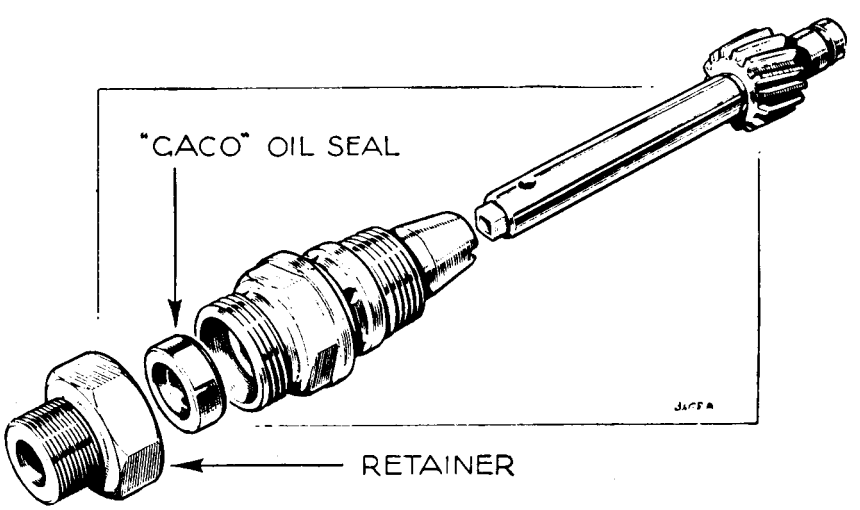

Fig. F.12

The components of the modified speedometer drive assembly are here shown in their relative positions for assembly

The modified speedometer drive is easily distinguished by the second large hexagon retaining the oil seal (see Fig. F.11). In all cars possessing speedometer drives of the original design with only one hexagon

(4) Press the oil seal into its housing in the pinion bearing, taking care that it enters squarely and that the metal casing of the seal is not damaged or distorted.

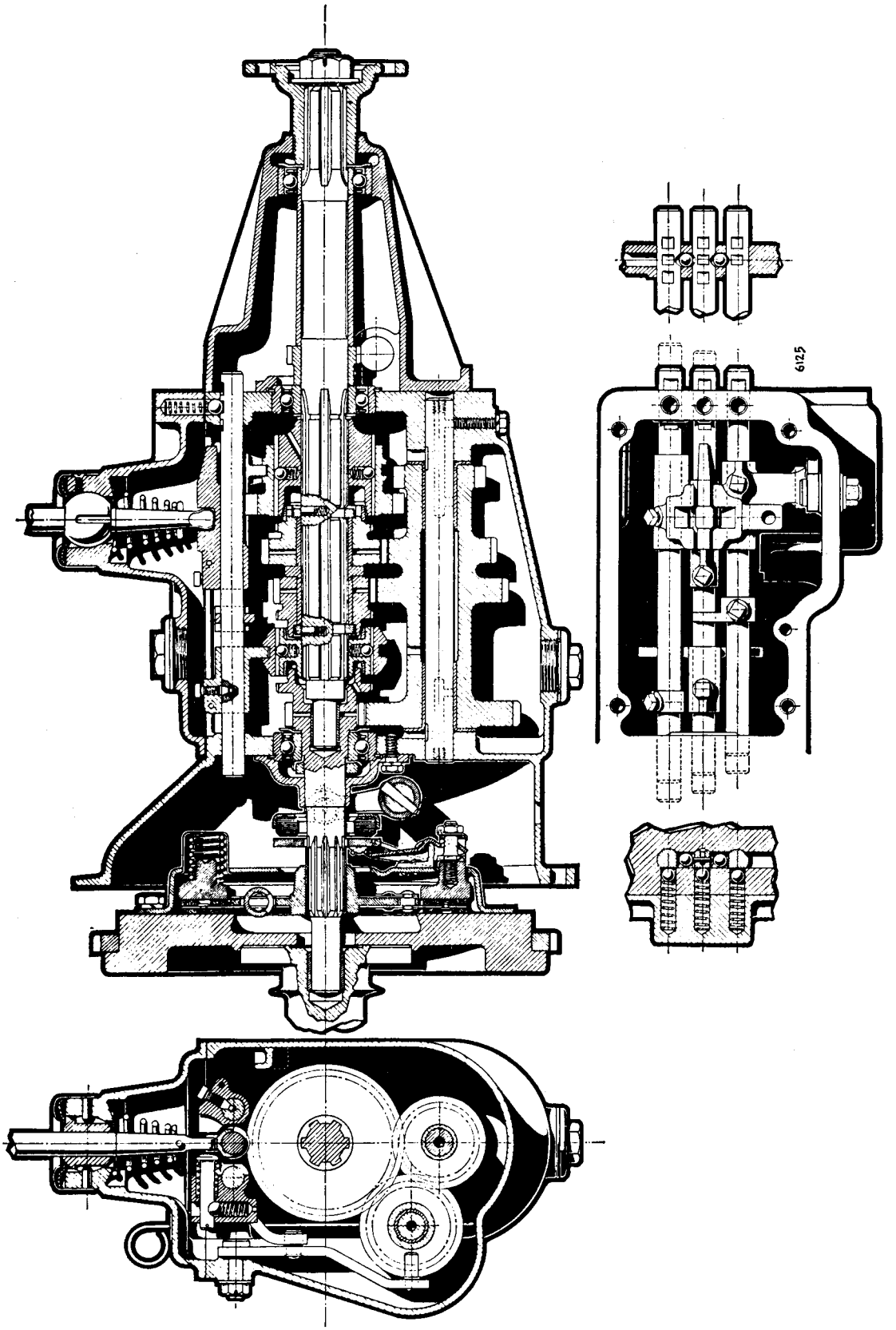

THE CLUTCH AND GEARBOX

(5) Screw the oil seal retainer (Part No. 162286), into position on the end of the pinion bearing so that the flats of its hexagon coincide with those of the speedometer drive bearing. Insert the modified speedometer drive assembly into the gearbox and screw it firmly into position with a box spanner, passing the spanner over the oil seal retainer into engagement with the hexagon of the speedometer drive pinion bearing. Now make sure that the oil seal retainer is screwed up tight.

(6) Replace the speedometer cable, making sure that the square on the end of the cable is in proper engagement with the squared driving socket on the end of the pinion shaft.

Care should also be taken to see that the cable is devoid of sharp bends when it is coupled to the speedometer drive.

Section F.6

SPEEDOMETER DRIVE SLIPPING

Instances of incorrect speedometer reading have been traced to slipping of the speedometer drive gear on the gearbox mainshaft.

It will be seen from the illustrations that the speedometer drive gear is held frictionally between the rear gearbox ball clearance and the distance tube for the extension ball bearing, the whole assembly being controlled by the retaining nut for the propeller shaft flange.

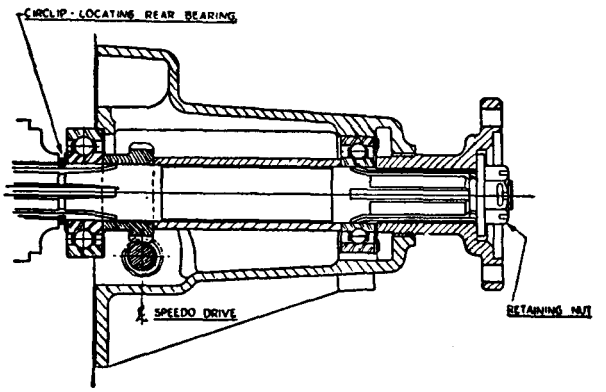

Fig. F.13

This illustration indicates the circlip which locates the rear mainshaft bearing

Any slipping which takes place may be overcome by tightening the propeller shaft flange retaining nut on the gearbox mainshaft, **but care must be taken not to tighten this nut in excess of 600 lb. in. (6·9 kg. m.).** Tightening in excess of this figure may cause the circlip forming the abutment for the mainshaft rear ball bearing to collapse, aggravating the trouble and introducing further difficulties.

The location of the circlip is clearly indicated in Fig. F.13.

SECTION FF

THE GEARBOX

OF THE MORRIS MINOR (Series II)

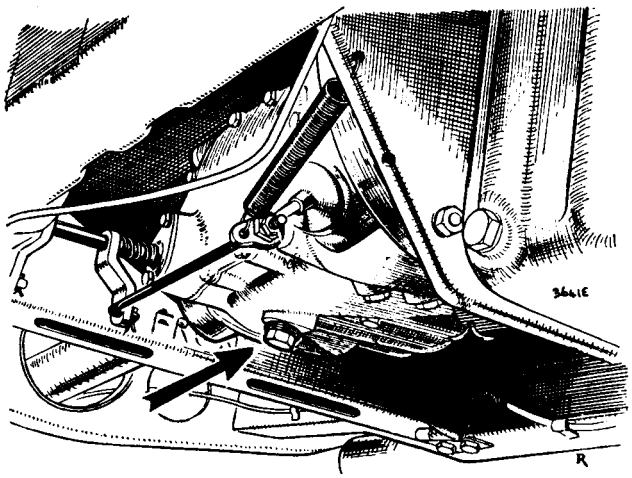

Fig. FF.1

The location of the gearbox drain plug. The clutch actuating linkage can also be seen in this illustration

GENERAL DESCRIPTION

The gearbox has four forward gears and one reverse gear.

Top gear is obtained by direct drive, third and second by gears in constant mesh, and first and reverse by sliding spur gears. Synchromesh is incorporated on second, third, and fourth gears.

A sliding joint is fitted to the rear end of the third motion shaft instead of being fitted to the propeller shaft, as is the usual practice.

To engage reverse gear it is necessary to move the gear lever to the extreme right of its neutral position and then to pull it upwards. The lever may then be moved to the right until the stop is reached and moved backwards, when reverse gear will be engaged.

Section FF.1

REMOVAL AND REPLACEMENT OF THE GEARBOX

If the car is fitted with a heater disconnect and remove the battery to give clearance to the heater control valve. In any case disconnect the battery.

Take out the front floor carpet and remove the gearbox floor cover. Note that two of the inner row of screws each side of the gear lever are longer than the remainder and pick up the gearbox supporting cross-member. Remove the gear lever and the lever seating brackets.

Slacken the exhaust pipe flange clamping bolts and disconnect the exhaust pipe.

Disconnect the cable from the starter motor.

Remove the air cleaner assembly (see Section AA.7) and attach lifting tackle to the rocker cover studs.

Drain the oil from the gearbox (2¼ pints, 2·7 U.S. pints, 1·3 litres).

Mark the rear propeller shaft flange and the rear axle drive flange to ensure reassembly in their original position. Extract the bolts and self-locking nuts securing the flanges and push the propeller shaft forward to part the flanges, lower it, and withdraw it to the rear until the driving splines are disengaged.

Disconnect the speedometer drive and detach the earth cable from the gearbox.

Disconnect the clutch pedal return spring and the operating rods from the clutch relay levers by extracting the split pins and anti-rattle washers.

Take out the two bolts and spring washers securing the relay shaft bracket to the main frame and remove the packing plate, bracket, and bushes. Take care not to lose the washer between the inner bush and the lever. Withdraw the shaft from the spherical bush and take off the spring. Remove the operating rod from the clutch withdrawal lever without disturbing the adjustment.

Remove the engine steady cable (see Section AA.36).

Slacken the nut with spring and flat washers which secures each rear mounting rubber to the cross-member. Take out the four remaining bolts securing the cross-member to the frame, noting that the forward one on the left-hand side is longer than the others and secures the earth cable. Remove the cross-member.

Lower the engine carefully as far as it will go and take out the bolts securing the gearbox and starter motor to the engine rear mounting plate.

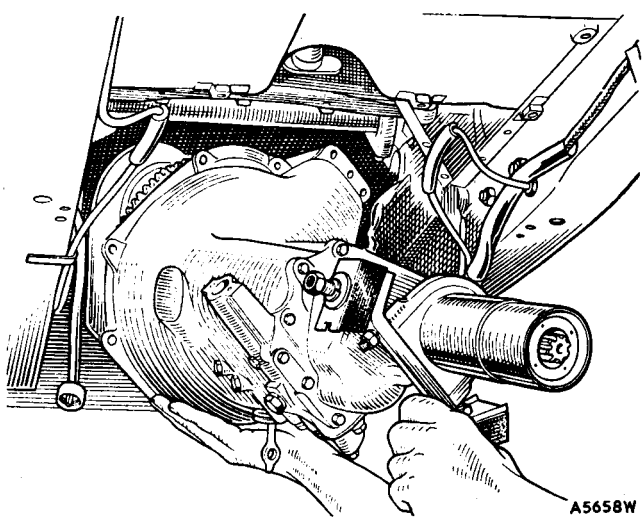

Fig. FF.2

Withdrawing the gearbox from the car by lowering it and turning it carefully clockwise

Withdraw the gearbox to the rear until it is clear of the flange locating dowels, and then, supporting carefully to avoid damage to the clutch release plate, rotate the gearbox clockwise (seen from the rear) until the housing flange is clear of the steering rack. Lower the gearbox from the car.

Replacement is a reversal of the above procedure. Refill the gearbox with oil to Ref. A (page PP.2).

Section FF.2

DISMANTLING AND REASSEMBLING THE GEARBOX

Remove the dust seals from the clutch housing. Unlock the clutch withdrawal lever pivot bolt, remove the nut and washer, and then unscrew the bolt. Withdraw the lever.

Slacken the locknut below the gear lever knob and remove the knob. Take out the three bolts securing the gear lever assembly to the gearbox extension and remove the top seat, spring, bottom seat, peg, and the gasket. To remove the lever from the bottom seat rotate the large end of the retaining peg 90° and withdraw it.

Extract the speedometer drive pinion and washer.

Ensure that the oil is drained from the gearbox and extract the bolts securing the gearbox extension. Withdraw the extension complete with oil seals and bush, taking care not to lose the bearing packing washer as the faces are separated.

Turn the gearbox on its side and remove the cover-plate and gasket. Extract the selector rod locating plungers and springs and unlock and remove the selector fork locating screws and washers.

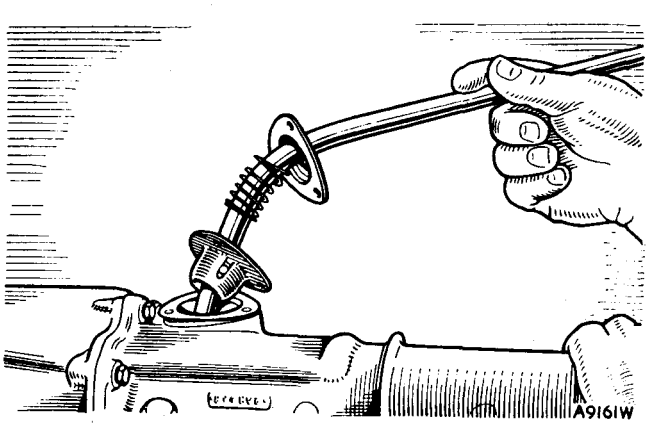

Fig. FF.3
Withdrawal of the gear change lever after removing its three retaining bolts

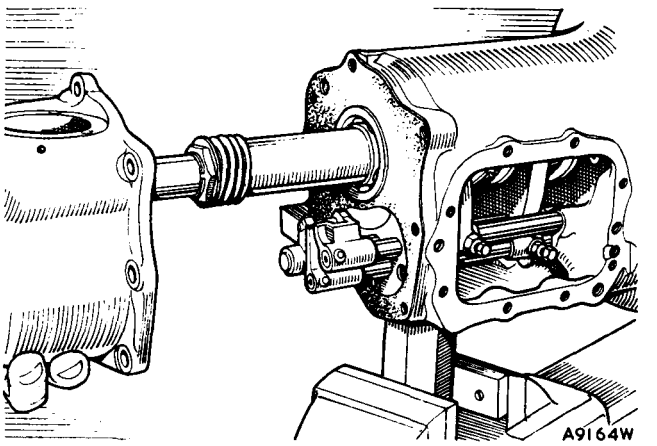

Fig. FF.4
Withdrawing the gearbox extension

Turn the gearbox upside-down and withdraw the rearmost of the two hexagon plugs with fibre washers from the bottom of the gearbox. Withdraw the third and fourth speed selector rod and then turn the gearbox to its normal position, extracting one ball through the rearmost drilling in the bottom of the gearbox and one from the passage in the wall of the gearbox between the third and fourth selector rod bore and the reverse gear selector rod.

Withdraw the first and second speed selector rod and extract the interlock plunger from the drilling between the cover rear end fixing screw holes. Unscrew the remaining plug from below the front end of the selector rods in the bottom of the gearbox and extract the spring and plunger.

Withdraw the reverse gear selector rod and lift out the selector forks.

Remove the front bearing cover, together with the bearing packing washer and cover gasket, and withdraw the layshaft.

Withdraw the third motion shaft, complete with the bearing housing, from the gearbox.

Withdraw the first motion shaft assembly.

Unscrew the reverse gear shaft retaining pin from below the gearbox and extract the shaft, reverse gear unit, and the layshaft gear and thrust washers.

Reassembly

With the various sub-assemblies built up in accordance with the instructions given in their appropriate sections, reassemble the gearbox in the following manner:

(1) Position the layshaft gear unit in the gearbox with the correct thrust washer at either end and thread a length of ⅛ in. (3·2 mm.) welding

THE MORRIS MINOR (Series II) GEARBOX

(Showing the Details of Its Assembly)

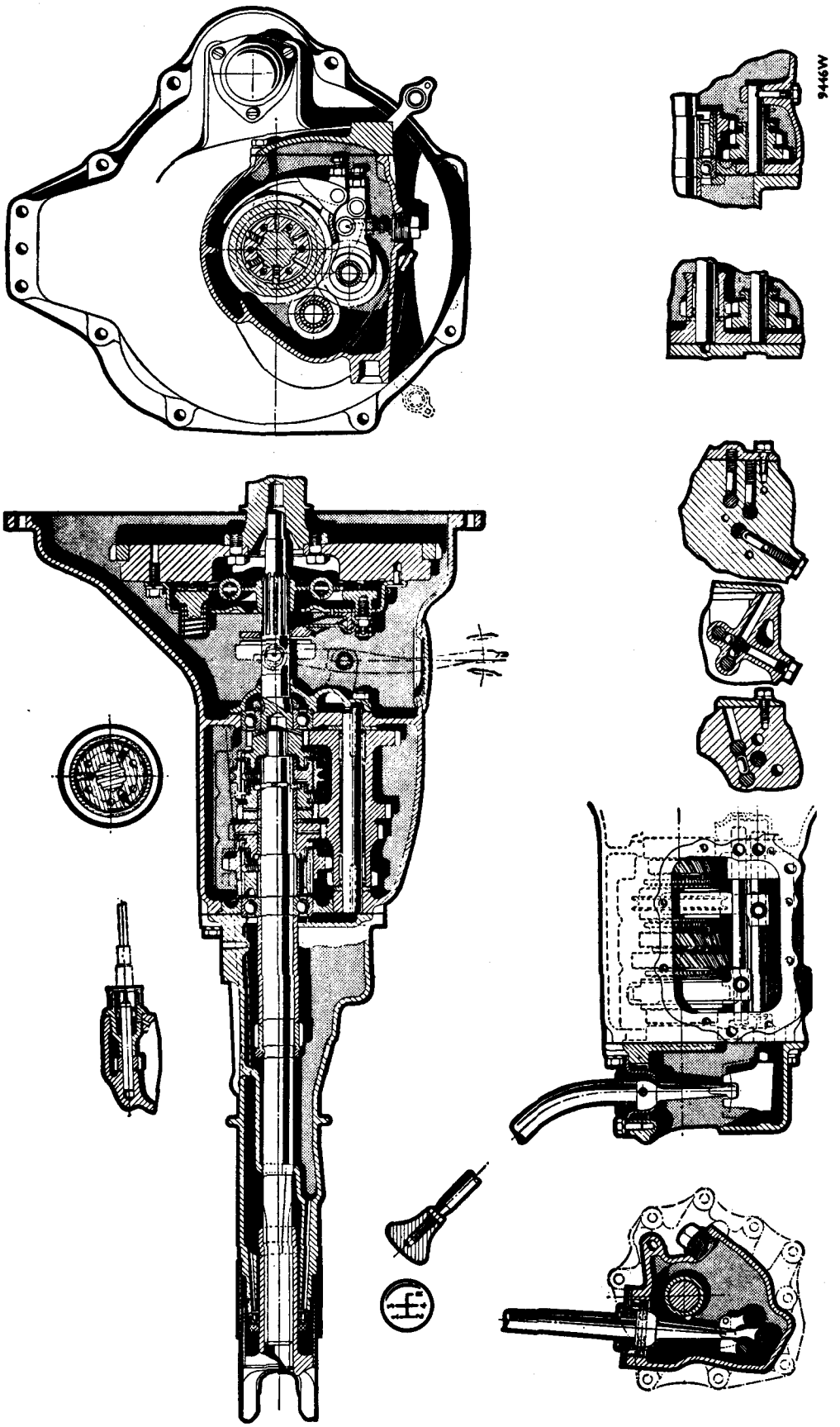

wire through the centre to suspend the gears and washers in their approximate positions.

(2) The layshaft is not inserted until the third motion shaft assembly and first motion shaft have been installed.

(3) Refit the first motion shaft assembly.

(4) Replace the reverse gear and shaft. The large gear is to the rear of the gearbox, and a screw-driver slot is provided in the shaft to assist in aligning the locating hole in the shaft with the locating screw which is inserted through the bottom of the gearbox.

(5) Replace the third motion shaft assembly.

(6) Enter the layshaft, stepped end first, from the rear end of the gearbox, rotating it as it is entered to assist alignment of the thrust washers. The lip at the front end of the shaft must register with the oil groove in the gearbox front end cover, which provides lubrication for the needle-roller bearings in the lay gear.

(7) Replace the bearing packing washer and the front end cover, using a new gasket if necessary (see Section FF.8).

(8) Position the gear selector forks. The large boss of the reverse selector faces the front of the gearbox and the third and fourth selector fork is positioned to enable the reverse selector rod to pass through a clearance hole in the fork. Do not replace the locating screws in the forks until the registers in the rods and the forks are correctly aligned.

(9) Replace the reverse selector rod, identified by the stop pin through the gate, threading it through the bore farthest from the gearbox side cover, the reverse gear fork, and the clearance hole in the third and fourth gear fork. With the gate uppermost, align the locating screw hole and register, replace, and lock the selector fork screw see Fig. FF.5).

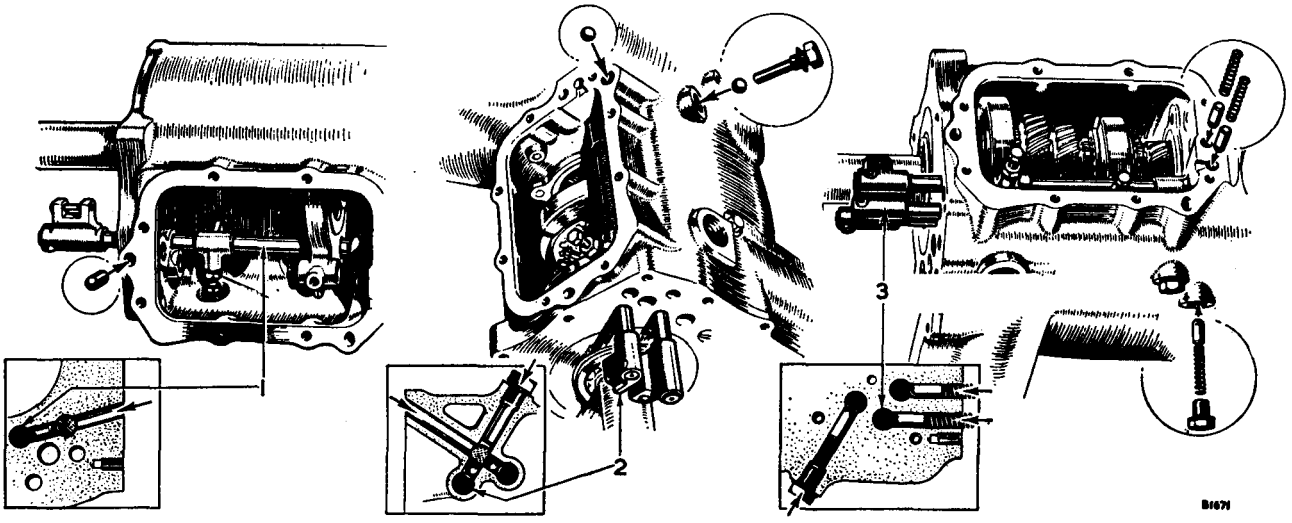

Fig. FF.5

This series of illustrations indicates the location and correct assembly of the selector locking balls, plungers, and springs

1. Reverse gear fork rod. 2. First and second gear fork rod (gearbox upside down). 3. Third and fourth gear fork rod.

Align the groove in the rear of the reverse selector shaft with the drilling in the rear wall of the gearbox between two side cover fixing screw holes and insert the double-ended plunger in the drilling. Push the plunger down until it engages the groove in the shaft.

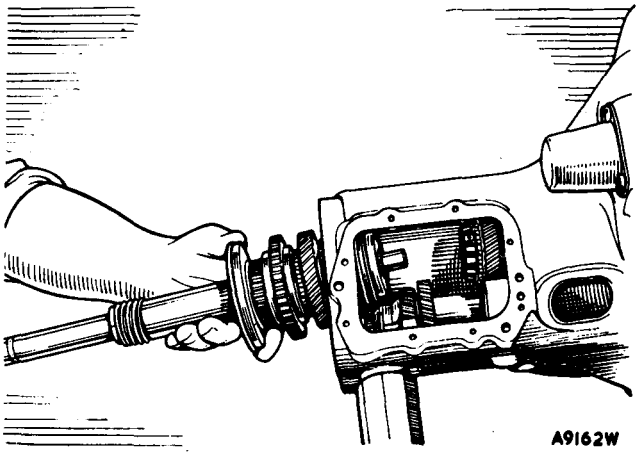

Fig. FF.6

Withdrawing the third motion shaft

THE MORRIS MINOR (Series II) GEARBOX COMPONENTS

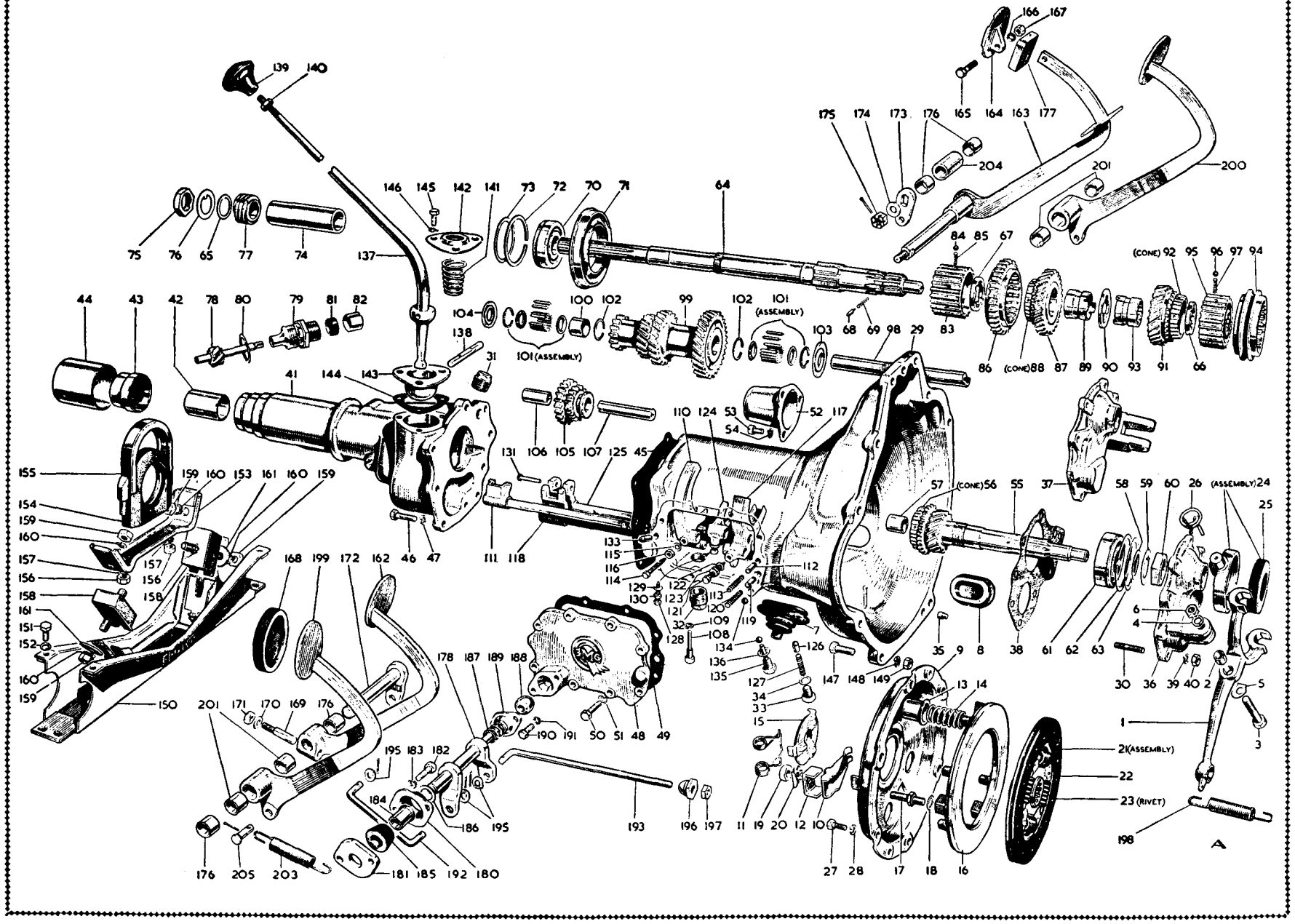

KEY TO THE MORRIS MINOR (Series II) GEARBOX COMPONENTS

No.	Description
1.	Lever—clutch withdrawal.
2.	Bush—lever.
3.	Bolt—lever.
4.	Spring washer—bolt.
5.	Lock washer—bolt.
6.	Nut—bolt.
7.	Dust cover—rubber—lever.
8.	Dust cover—rubber—blanking.
9.	Cover—clutch.
10.	Lever—clutch release.
11.	Spring—lever.
12.	Anchor plate—lever.
13.	Thimble—clutch thrust spring.
14.	Spring—clutch thrust.
15.	Thrust plate—clutch.
16.	Pressure plate assembly.
17.	Stud—pressure plate.
18.	Lock washer—stud.
19.	Nut—stud.
20.	Lock washer—nut.
21.	Driven plate assembly.
22.	Lining—driven plate.
23.	Rivet—lining.
24.	Ring assembly—clutch thrust.
25.	Ring—carbon.
26.	Retainer—ring.
27.	Screw—clutch to flywheel.
28.	Spring washer—screw.
29.	Casing—gearbox.
30.	Stud—front cover.
31.	Plug—oil filler.
32.	Plug—oil drain.
33.	Plug—reverse plunger.
34.	Washer—plug.
35.	Dowel—engine alignment.
36.	Cover—gearbox front (R.H.D.).
37.	Cover—gearbox front (L.H.D.).
38.	Joint—cover.
39.	Spring washer—cover stud.
40.	Nut—cover stud.
41.	Cover—gearbox rear.
42.	Bush—propeller sliding joint.
43.	Seal—oil.
44.	Dust cover.
45.	Joint—cover to casing.
46.	Screw—cover to casing.
47.	Spring washer—screw.
48.	Cover—gearbox side.
49.	Joint—cover.
50.	Screw—cover to casing.
51.	Spring washer—screw.
52.	Cover—starter pinion.
53.	Screw—cover to casing.
54.	Spring washer—screw.
55.	Shaft—first motion.
56.	Cone—synchronizing.
57.	Bush—shaft.
58.	Washer—shaft.
59.	Lock washer—shaft nut.
60.	Nut—first motion shaft.
61.	Bearing—first motion shaft.
62.	Spring ring—bearing.
63.	Washer—bearing packing.
64.	Shaft—third motion.
65.	Washer—shaft.
66.	Washer—front thrust.
67.	Washer—rear thrust.
68.	Peg—front thrust washer.
69.	Spring—front thrust washer.
70.	Bearing—shaft rear.
71.	Housing—bearing.
72.	Spring ring—bearing.
73.	Washer—bearing packing.
74.	Distance piece—speedometer gear.
75.	Nut.
76.	Lock washer—nut.
77.	Gear—speedometer drive.
78.	Pinion—speedometer drive
79.	Bush.
80.	Joint—bush.
81.	Seal—oil.
82.	Ring—retaining.
83.	Synchronizer—second gear.
84.	Ball—synchronizer.
85.	Spring—synchronizer.
86.	Gear—first speed.
87.	Gear—second speed.
88.	Cone—synchronizing.
89.	Bush.
90.	Ring—interlocking—second and third gear bushes.
91.	Gear—third speed.
92.	Cone—synchronizing.
93.	Bush.
94.	Sleeve—coupling—third and fourth speed.
95.	Synchronizer.
96.	Ball.
97.	Spring.
98.	Layshaft.
99.	Gear unit—layshaft.
100.	Distance piece.
101.	Bearing—roller.
102.	Spring ring—bearing.
103.	Washer—front thrust.
104.	Washer—rear thrust.
105.	Gear—reverse.
106.	Bush.
107.	Shaft.
108.	Lock screw—shaft.
109.	Spring washer—lock screw.
110.	Fork—first and second change speed.
111.	Rod—selector—first and second.
112.	Plunger—rod.
113.	Spring—plunger.
114.	Screw—locating.
115.	Spring washer—screw.
116.	Nut—screw.
117.	Fork—third and fourth change speed.
118.	Rod—selector—third and fourth.
119.	Plunger—rod.
120.	Spring—plunger.
121.	Screw—locating.
122.	Spring washer—screw.
123.	Nut—screw.
124.	Fork—reverse.
125.	Rod—selector—reverse.
126.	Plunger—rod.
127.	Spring—plunger.
128.	Screw—locating.
129.	Spring washer—screw.
130.	Nut—screw.
131.	Rivet—reverse fork rod.
133.	Plunger—interlock.
134.	Ball.
135.	Plug—hole.
136.	Washer—fibre—plug.
137.	Lever—change speed.
138.	Peg.
139.	Knob.
140.	Locknut—knob.
141.	Spring—reverse—safety.
142.	Seat—top.
143.	Seat—bottom.
144.	Joint washer—seat.
145.	Screw—seat to rear cover.
146.	Spring washer—screw.
147.	Bolt—to mounting plate.
148.	Spring washer—bolt.
149.	Nut—bolt.
150.	Cross-member—rear mounting.
151.	Screw—to frame.
152.	Spring washer—screw.
153.	Channel—rear mounting rubber.
154.	Rubber—gearbox extension.
155.	Retainer—extension rubber.
156.	Nut—to channel.
157.	Spring washer—nut.
158.	Block—rubber—rear mounting.
159.	Nut—to channel and cross-member.
160.	Spring washer—nut.
161.	Washer—to cross-member.
162.	Pedal with pad—clutch.
163.	Pedal with shaft—clutch (L.H.D.).
164.	Pad (L.H.D.).
165.	Bolt—to pad (L.H.D.).
166.	Spring washer—bolt (L.H.D.).
167.	Nut—pad bolt.
168.	Pad—rubber.
169.	Cotter.
170.	Washer—cotter.
171.	Nut—cotter.
172.	Shaft with lever.
173.	Lever (L.H.D.).
174.	Washer—pedal shaft (L.H.D.).
175.	Nut—pedal shaft (L.H.D.).
176.	Bush—in frame.
177.	Seal (L.H.D.).
178.	Shaft with levers—relay.
180.	Bracket.
181.	Packing—bracket.
182.	Screw—bracket to frame.
183.	Spring washer—bracket screw.
184.	Bush.
185.	Bush—rubber.
186.	Washer—plain.
187.	Spring.
188.	Bearing—spherical.
189.	Retainer—bearing.
190.	Screw—bearing retainer.
191.	Spring washer—retainer screw.
192.	Rod—pedal to relay.
193.	Rod—relay to engine lever.
195.	Washer—anti-rattle.
196.	Nut—spherical—engine rod.
197.	Locknut—spherical nut.
198.	Spring—return.
199.	Pedal—brake.
200.	Pedal—brake (L.H.D.).
201.	Bush.
203.	Spring—return.
204.	Spacer (L.H.D.).
205.	Pin—clevis—to master cylinder.

(10) Replace the first and second gear selector fork and insert the first and second selector rod, identified by the closed gate, in the bore nearest to the side cover. Align the selector fork retaining screw hole with the register on the rod and insert and lock the screw.

(11) Turn the gearbox over. Align the groove at the rear end of the rod with the double-ended plunger already inserted and insert an interlock ball through the lower drilling in the right-hand corner of the cover-plate face, pushing the ball beyond the third and fourth selector rod bore until it engages the groove in the reverse shaft. Insert a ball through the rearmost of the drillings in the bottom of the gearbox at the front end of the rods. Insert the third and fourth selector rod, engaging the selector fork and aligning the gate with the gates of the other two rods. Replace the plug and fibre washer in the bottom of the gearbox. Align the fork retaining screw hole with the register on the rod and insert and lock the screw.

(12) Insert the single-ended plunger, round end first, in the foremost of the two drillings in the bottom of the gearbox below the front end of the rods. Follow the plunger with a spring and secure with a plug and fibre washer.

(13) Clean the mating faces of the gearbox casing and side cover. Insert the first and second rod and third and fourth selector rod locating plungers, round ends first, and the retaining springs (see Fig. FF.5). Replace the side cover and joint seal.

(14) Clean the rear face of the gearbox housing and fit a new joint seal gasket if the original is damaged. Smear grease on the outer race of the rear bearing and adhere the packing washer. Before replacing the gearbox rear cover ensure that the oil seal, felt, and sliding joint bush are in good condition. To remove the oil seals the outer dust cover should be released from the gearbox casing by cutting with a hacksaw the turned-down edge which registers in a groove in the gearbox. Pull off the dust cover and then remove the oil seal assembly, using Service tool 18G 389 and adaptor 18G 389 A. When reassembling, a new oil seal assembly complete must be fitted (an outer dust cover is not fitted to later gearboxes).

Should it be necessary to remove the sliding joint bush, this must be drawn from the cover and not driven inwards.

Replace the oil seal assembly, using Service tool 18G 134 and adaptor 18G 134 L, and turn down the edge into the groove provided. Fit a new dust cover and secure in the same way.

(15) Fit the rear cover. Replace the speedometer drive pinion and sealing washer.

(16) Replace the clutch withdrawal lever, inserting the bolt and locking tag washer from the bottom and screwing it into the top lug of the bracket. Tighten the bolt to eliminate side-play from the lever and lock the bolt with the tag washer, nut, and spring washer.

Replace the lever dust cover and blanking plug, the drain plug, and the starter motor pinion shield.

(17) To reassemble the gear lever ball seating, position the bottom seating so that the two holes parallel with the retaining peg are in front of the lever. Note that one slot in the seating has an enlarged diameter in the centre. Insert the peg, chamfered edge to one side, through this hole and through the ball until the shouldered centre portion is just inside the ball. Turn the peg 90° until the chamfered side is uppermost and push the peg until it is centred.

Replace the spring, large coils uppermost, and the top seating. Position the seal on the gearbox and replace and secure the assembly with the three bolts.

Section FF.3

DISMANTLING AND REASSEMBLING THE MAINSHAFT

Withdraw the top and third gear synchromesh hub from the forward end of the shaft, observing that the plain side of the hub faces to the rear of the gearbox.

Remove the front thrust washer by pressing down the spring-loaded locating plunger and rotating the washer until the splines register with those on the shaft. Withdraw the thrust washer and gear. Take out the plunger and spring and withdraw the third gear bush and interlocking ring. Withdraw the second speed gear and bush. Remove the rear thrust washer and the first speed gear and hub.

Secure the mainshaft in the padded jaws of a vice and unlock and remove the speedometer drive locknut, the washers, the drive gear, and the distance tube. Press the bearing and bearing housing from the mainshaft. Press the bearing from the housing and remove the spring ring from the bearing outer race.

If it is necessary to separate the second or third and fourth speed striking dog from the synchromesh hub and cone assemblies the assembly should be wrapped in a suitable piece of cloth in order to retain the three balls and springs which are located in each hub.

When assembling the first and second speed hub ensure that the cone side of the hub is on the same side of the assembly as the plain side of the first gear teeth.

Reassembly of the mainshaft is a reversal of the dismantling procedure. Commence by replacing the bearing and bearing housing and the speedometer drive gear.

The first and second speed hub is fitted with the cone side away from the bearing and is followed by the rear thrust washer and the plain half of the split bush, with the plain end against the thrust washer. Follow this with the second speed gear, the interlocking ring, and the splined half of the centre bush, engaging the dogs of each half-bush with the central interlocking ring.

To facilitate relocking the front thrust washer insert the spring and plunger and draw half the split bush forward until it just overlaps the plunger and retains it within the shaft. Carefully position the third speed gear, plain side first, and follow with the thrust washer. When the washer abuts the bush give it a sharp tap to position the bush and place the washer above the plunger. Turn the thrust washer until the plunger engages the spline and locks the washer.

Finally, replace the top and third speed synchromesh hub, plain side towards the retaining thrust washer.

Section FF.4

DISMANTLING AND REASSEMBLING THE FIRST MOTION SHAFT ASSEMBLY

Unlock and remove the securing nut and withdraw from the shaft the lock washer and washer.

Press the bearing from the shaft and remove the circlip from the bearing.

When reassembling ensure that the inner tag of the lock washer, which engages the keyway in the shaft, is turned away from the bearing.

Section FF.5

SPEEDOMETER DRIVE PINION

Commencing at Engine No. 58088, the cable end thread of the speedometer pinion bush is reduced in size from $\frac{7}{8}$ in. Whit. to $\frac{3}{4}$ in. Whit. A smaller oil seal and seal retaining ring are also fitted.

The new speedometer drive pinion and bush assembly is interchangeable with the old type if a new flexible drive cable is also fitted.

Section FF.6

SECOND SPEED SYNCHRONIZER

To obviate self-disengagement of first gear a first speed gear and second speed synchronizer, with two-thirds of the teeth relieved on the drive side, is fitted as an assembly from Gearbox No. D9176.

Should this assembly be fitted to gearboxes between numbers A2476 and D9175, it is important that the original first and second speed fork rod with the shallow first speed notch and plunger be fitted.

Introduced into this assembly from Engine No. 129272 is a second speed synchronizer with the spring holes equally spaced, replacing the synchronizer with holes biased. This is to facilitate stationary first gear engagement.

A modified first speed wheel is used in gearboxes fitted to engines numbered from 266197 to 266400 and 266534 onwards; the number of teeth is reduced to 32 with improved tooth form.

Section FF.7

MODIFIED REVERSE GEAR

From Engine No. 182945 to 183000 and 183114 onwards a modified reverse gear retaining the same pitch diameter with one tooth deleted is introduced, together with a modified bush with increased internal diameter. Also fitted are modified gearbox and rear extension casings, a reverse fork, and a reverse shaft.

The modification is to reduce stress in the reverse shaft and reverse gear. A conversion set (Part No. 28G 52 B) is available to service earlier vehicles.

Section FF.8

BEARING PACKING WASHERS

When refitting the gearbox front cover locate the paper joint gasket on the studs and the ·006 in. (·152 mm.) packing washer in the front cover bearing recess. Place the cover in position and secure it with its seven nuts and spring washers.

Although a ·006 in. (·152 mm.) washer is usually found to be sufficient, use the following method to determine the thickness of washer required for the front cover.

Measure the depth of the cover recess and the amount the bearing protrudes from the casing. Measure the thickness of the old gasket if it is available; if not, fit and tighten down the front cover with only the paper joint gasket in position to compress it, take off the front cover, remove the gasket, and measure its thickness. Add the thickness of the joint washer

to the depth of the cover recess and subtract the amount by which the bearing protrudes from the casing. The result gives the thickness of washers required.

Washers ·004 in., ·006 in., and ·010 in. (·102 mm., ·152 mm., and ·254 mm.) thick are available and it is advisable to use the least number possible to arrive at the correct thickness.

When fitting the gearbox rear extension carry out the instructions detailed above and tighten the nine securing set bolts evenly by diametrical selection.

SECTION FFF

THE GEARBOX

OF THE MORRIS MINOR 1000

THE MORRIS MINOR 1000 GEARBOX REMOTE CONTROL COMPONENTS

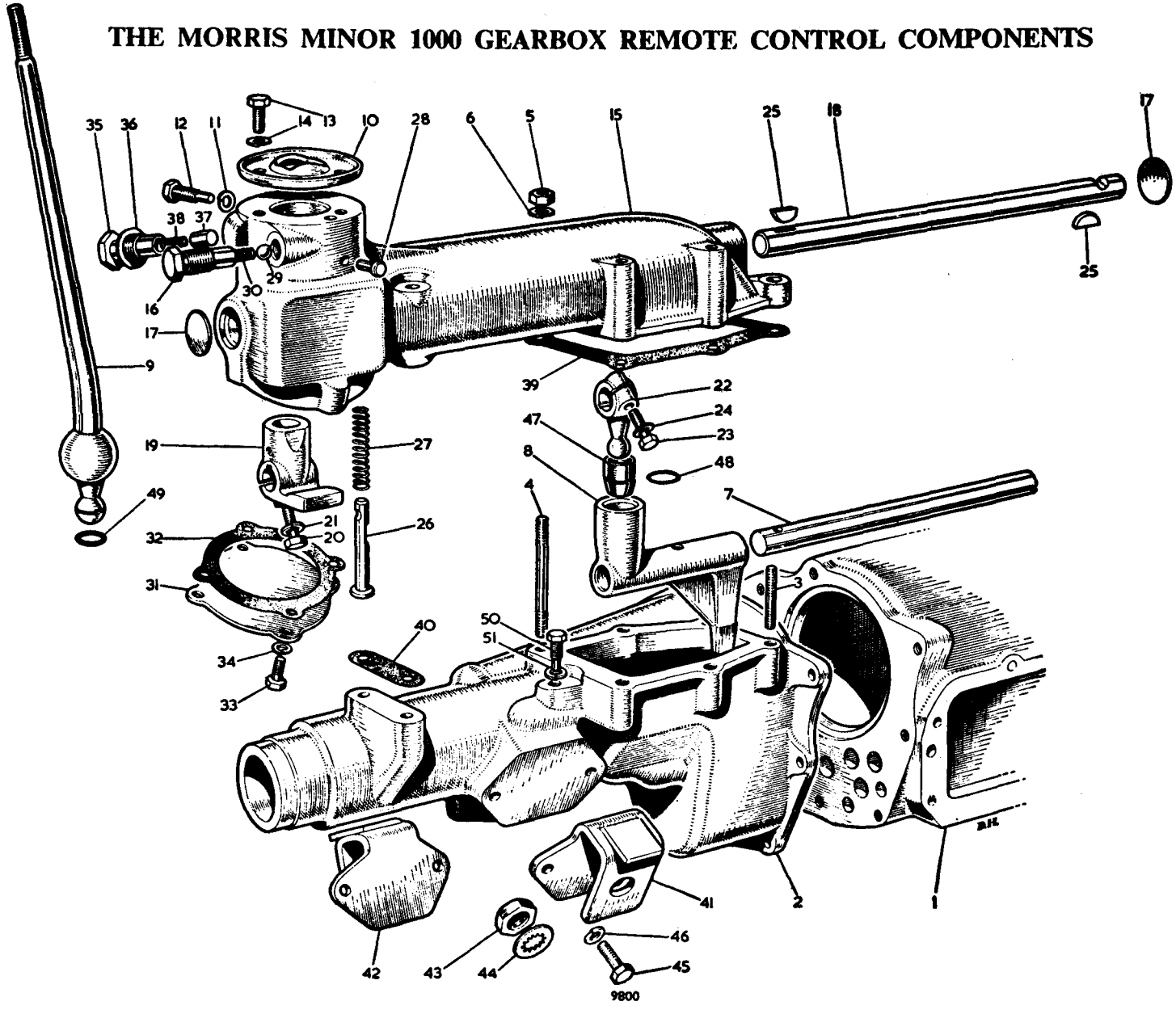

KEY TO THE MORRIS MINOR 1000 GEARBOX REMOTE CONTROL COMPONENTS

No.	*Description*
1.	Casing—gearbox.
2.	Cover—rear.
3.	Stud—short.
4.	Stud—long.
5.	Nut—stud.
6.	Spring washer—stud.
7.	Control shaft.
8.	Control lever.
9.	Lever—change speed.
10.	Cover—change speed lever seat.
11.	Spring washer—change speed lever peg.
12.	Peg—change speed lever.
13.	Screw—cover.
14.	Spring washer—screw.
15.	Casing—remote control.
16.	Plug—reverse plunger detent.
17.	Plug—casing.
18.	Shaft—remote control.
19.	Lever—selector—rear.
20.	Screw—rear selector lever.
21.	Spring washer—screw.
22.	Lever—selector—front.
23.	Screw—front selector lever.
24.	Spring washer—screw.
25.	Key—selector levers.
26.	Plunger—reverse selector.
27.	Spring—plunger.
28.	Pin—locating.
29.	Ball—reverse selector plunger.
30.	Spring—detent.
31.	Cover—bottom.
32.	Joint—bottom cover.
33.	Screw—bottom cover.
34.	Spring washer—screw.
35.	Cap—spring retaining.
36.	Washer—cap.
37.	Plunger—anti-rattle.
38.	Spring—plunger.
39.	Joint—remote control casing—front.
40.	Joint—remote control casing—rear.
41.	Packing bracket—R.H.
42.	Packing bracket—L.H.
43.	Nut—special.
44.	Washer—shakeproof.
45.	Screw—packing bracket.
46.	Spring washer—packing bracket.
47.	Bush—front selector lever.
48.	Circlip—bush.
49.	Ring—rubber.
50.	Peg—control shaft locating.
51.	Spring washer—peg.

Section FFF.1

DISMANTLING AND REASSEMBLING THE GEARBOX

Dismantling

Extract the drain plug and speedometer drive pinion and bush.

Remove the clutch arm dust seal from the clutch housing. Unlock the clutch withdrawal lever pivot bolt, remove the nut and washer, and unscrew the bolt. Withdraw the lever.

Take out the three set screws securing the change speed lever seat cover to the remote control casing and remove the lever and cover. **Care must be taken** to ensure that the anti-rattle plunger and spring (items 37 and 38, page FFF.2) do not drop into the remote control casing. Neglect of this important point could result in major damage to the gearbox.

Unscrew the eight nuts and remove the remote control casing from the rear extension. Extract the nine bolts securing the rear extension and withdraw the extension, at the same time manœuvring the control lever from the selectors, taking care not to lose the bearing packing washer as the faces are separated.

Proceed as detailed in Section FF.2, commencing at the paragraph beginning 'Turn the gearbox on its side and remove the cover-plate and gasket.'

Reassembly

Proceed as detailed in Section FF.2 as far as the seventh paragraph in the first column of page FF.8, ending 'Fit a new dust cover and secure in the same way', and then continue as follows.

Fit the rear extension to the gearbox, locating the control lever in the shifter rod selectors, and replace the speedometer drive and bush.

Refit the remote control casing to the rear extension, insert the change speed lever and cover, and secure with the three bolts.

Replace the clutch withdrawal lever, inserting the bolt and locking washer from the bottom and screwing it into the top lug of the bracket. Tighten the bolt to eliminate side-play from the lever and lock the bolt with the locking washer, spring washer, and nut. Replace the lever dust seal.

On cars commencing at Car No. 460611 a thrust button and spring are fitted in the rear selector lever between the selector lever and the change speed lever, with the button uppermost, to prevent rattle.

Section FFF.2

MODIFIED SPEEDOMETER DRIVE PINION AND PINION BUSH

To reduce wear and noise speedometer drive pinions manufactured from nylon material were fitted on later gearboxes commencing at Gearbox No. AO2696. A nylon pinion complete with its steel spindle may be interchanged with a steel pinion and spindle.

Subsequently nylon speedometer pinion bushes were introduced in place of the brass bushes previously used. The oil feed hole in the nylon bush is of reduced diameter to diminish the oil flow to the speedometer drive cable. When removing or fitting a nylon bush it is essential to use a socket or box spanner to prevent damage to the corners of the hexagon. The copper sealing washer fitted

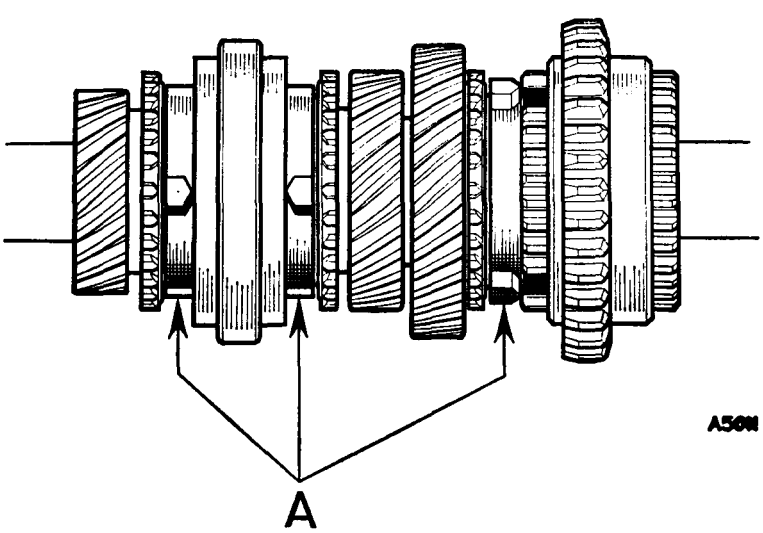

Fig. FFF.1

The mainshaft, showing (A) *the baulk rings* (10*MA engines*)

between the brass bush and the rear cover of the gearbox and the pinion oil seal retaining ring are not required with the nylon bush.

This modification was introduced at Gearbox No. AW7976. Interchangeability is not affected.

Section FFF.3

DISMANTLING AND REASSEMBLING THE MAINSHAFT

(10MA Engines)

The dismantling and reassembling sequences are the same as detailed in Section FF.3 except that the second and third/top gear synchronizers are fitted with baulk rings (see Fig. FFF.1).

NOTE.—Should the first and second speed gear assembly have been dismantled, the correct position of the gear on the hub when reassembling is most important. Should the gear be incorrectly assembled on the hub, selection of second gear will be impossible.

When reassembling the gear to the hub ensure that the plunger (1, Fig. FFF.2) in the hub aligns with the cut-away tooth in the gear assembly.

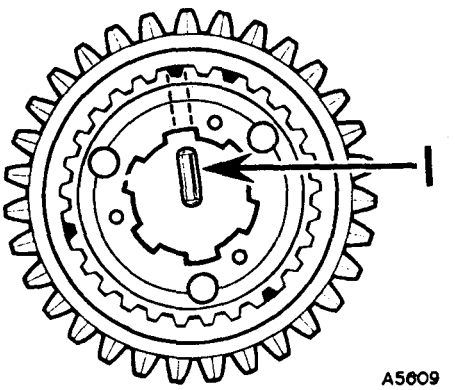

Fig. FFF.2

The first and second speed gear assembly, showing the gear and hub correctly assembled (10MA engines). The plunger is shown at (1)

SECTION G

THE PROPELLER SHAFT

OF THE MORRIS MINOR (Series MM)

GENERAL DESCRIPTION

The propeller shaft and universal joints are of the Hardy Spicer type with needle-roller bearings.

A single shaft connects the rear axle and the gearbox. To accommodate fore and aft movement of the axle the shaft is provided with a splined sliding joint at the front end. Each joint consists of a centre spider, four needle-roller bearing assemblies, and two yokes.

Section G.1

ATTENTION TO UNIVERSAL JOINTS

A lubricator is fitted to each front and rear spider and should be charged fully after overhauling and subsequently given three or four strokes with the grease gun at the specified intervals. The correct lubrication is grease to Ref. C (page P.2).

If a large amount of grease exudes from the oil seal the joint should be dismantled and new oil seals fitted.

A lubricator is also provided on the sleeve yoke for the lubrication of the splines of the sliding joint. Lubrication in service is with grease to Ref. C (page P.2) at the specified intervals. After dismantling, and before reassembling, the inside splines of the sleeve yoke should be smeared liberally with grease.

There are, therefore, three lubricators in all on the propeller shaft, one on each universal joint and one on the sliding joint.

Section G.2

TESTING FOR WEAR
(In Position)

Wear on the thrust faces is ascertained by testing the lift in the joint either by hand or with the aid of a length of wood suitably pivoted.

Any circumferential movement of the shaft relative to the flange yokes indicates wear in the needle-roller bearings or in the splined shaft.

Section G.3

REMOVAL OF THE PROPELLER SHAFT

Before removing the bolts and nuts securing the propeller shaft universal joint flanges to the gearbox flange and the rear axle flange carefully mark the flanges to assist in refitting them in their original position. **This is important.**

Remove the bolts and nuts securing the propeller shaft to the gearbox flange and the bolts and nuts securing the shaft to the rear axle flange. The shaft can now be removed from the car downwards and rearwards.

Section G.4

DISMANTLING THE PROPELLER SHAFT

Unscrew the dust cap at the rear end of the sliding joint and pull the joint off the splined shaft. Remove the enamel and dirt from the snap rings and bearing races. Remove all the snap rings by pinching their ears together with a pair of thin-nosed pliers and prising them out with a screwdriver.

If a ring does not slide out of its groove readily tap the end of the bearing race slightly to relieve the pressure against the ring. Remove the lubricator from the journal and, holding the joint in one hand with the splined sleeve yoke on the top, tap the radius of the yoke lightly with a copper hammer. The bearing should begin to emerge; turn the joint over and finally remove with the fingers. If necessary, tap the bearing race from inside with a small-diameter bar, taking care not to damage the bearing face, or grip the needle-bearing race in a vice and tap the flange yoke clear.

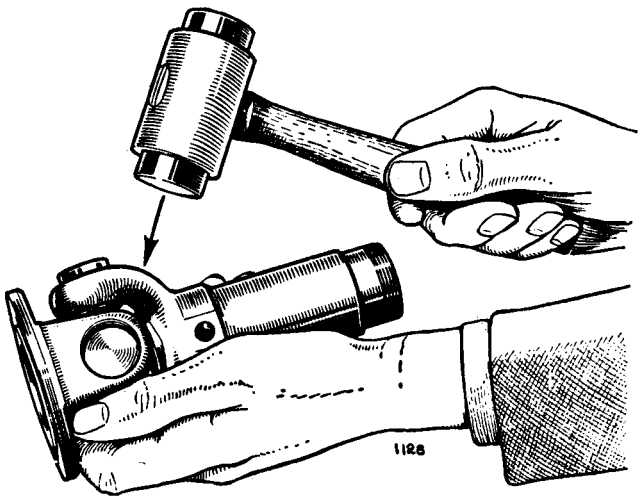

Fig. G.1

Where to apply light blows to the yoke in the first stage of dismantling the universal joint after removing the retaining circlip

Be sure to hold the bearing in a vertical position, and when free remove the race from the bottom side to avoid dropping the needle rollers.

Repeat this operation for the opposite bearing.

The splined sleeve yoke can now be removed. Rest the two exposed trunnions on wood or lead blocks to protect their ground surfaces, and tap the top lug of the flange yoke to remove the bearing race.

Turn the yoke over and repeat the operation.

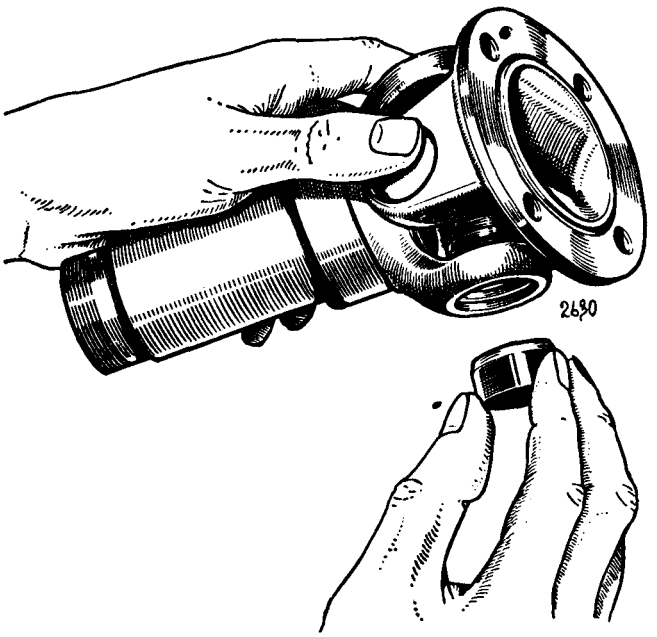

Fig. G.2

Showing the manner of removing the needle bearing after it has been partly withdrawn. When bearings are removed or replaced they should be held vertically to prevent the needle bearings from being displaced

Section G.5

TO EXAMINE AND CHECK FOR WEAR

The parts most likely to show signs of wear after long usage are the bearing races and the spider journals. Should looseness, load markings, or distortion be observed, the affected part must be renewed complete, since no oversized journals or bearing races are provided.

It is essential that the bearing races are a light drive fit in the yoke trunnions. In the event of wear taking place in the yoke cross-holes, rendering them oval, the yokes must be renewed. In case of wear in the cross-holes in the fixed yoke, which is part of the tubular shaft assembly, it should normally be replaced by a complete tubular shaft assembly. Only in the case of emergency should any attempt be made to renew this yoke.

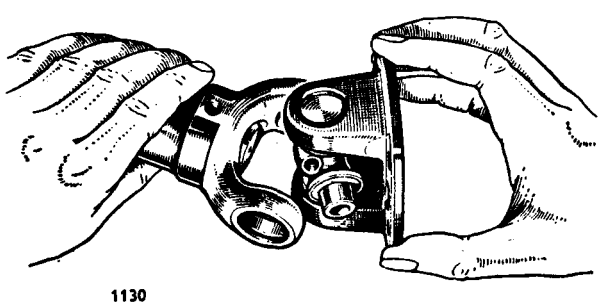

Fig. G.3

When the needle-roller bearings have been withdrawn from opposite sides of the spider the joint can be separated as shown

Section G.6

REASSEMBLING THE PROPELLER SHAFT

See that all the drilled holes in the journals are throughly cleaned out and free of grease.

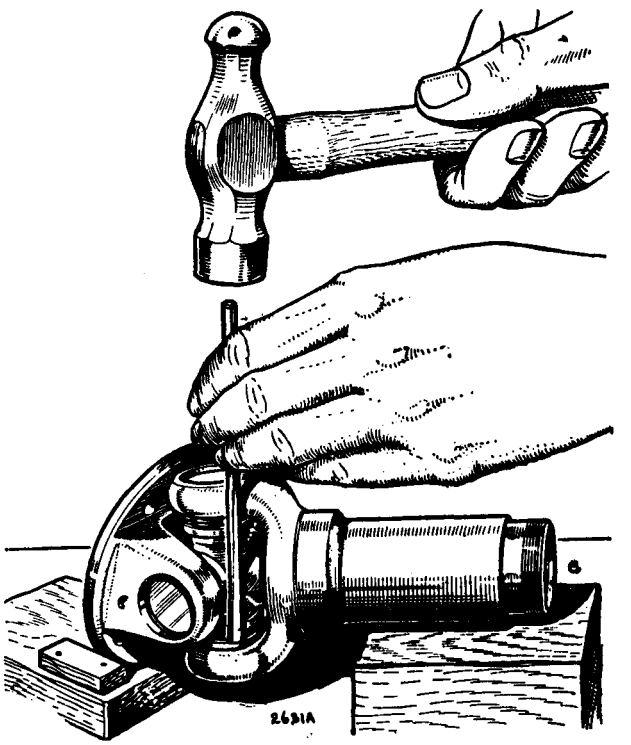

Fig. G.4

When dismantling the universal joint it is permissible to tap out the bearings with a small-diameter rod from the inside as shown, provided care is taken not to damage the roller race

Assemble the needle rollers in the bearing races and fill with grease. Should difficulty be experienced in retaining the rollers under control, smear the walls of the races with grease to Ref. D (page P.2) to retain the needle rollers in position while reassembling.

Insert the spider in the flange yoke, ensuring that **the lubricator boss is fitted away from the yoke.** Using a soft-nosed drift, about $\frac{1}{32}$ in. (·8 mm.) smaller in diameter than the hole in the yoke, tap the bearing into position. It is essential that the bearing races

are a light drive fit in the yoke trunnions. Repeat this operation for the other three bearings. Replace the circlips and be sure that these are firmly located in their grooves. If the joint appears to bind tap lightly with a wooden mallet; this will relieve any pressure of the bearings on the end of the journals. Before replacing the sliding joint on the shaft thread onto the splined shaft the dust cover, the steel washer, and the felt washer. When assembling the sliding joint be sure that the trunnions in the sliding and fixed joints are in line. This can be checked by observing that the arrows marked on the splined sleeve yoke and the splined shaft are in line.

It is always advisable to replace the cork gasket and the gasket retainers on the spider journals by means of the tubular drift shown in Fig. G.5. The spider journal shoulders should be shellacked prior to fitting the retainers to ensure a good oil seal.

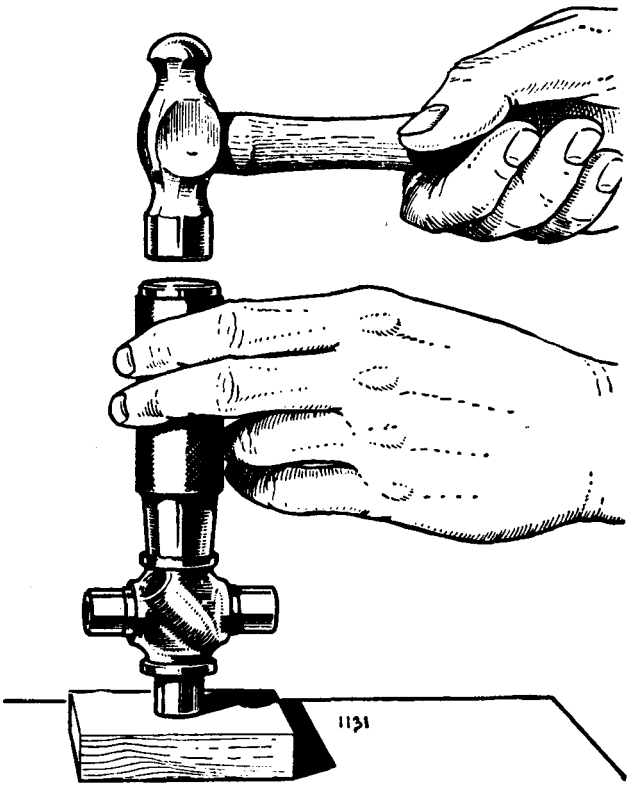

Fig. G.5

When replacing the gasket retainer use should be made of a hollow drift to tap it into place without damage

Section G.7

REPLACEMENT OF THE PROPELLER SHAFT

Wipe the faces of the flanges clean and place the propeller shaft in position on the car. Ensure that the flange registers engage correctly, that the components are replaced in exactly the same relation as before removal, and that the joint faces bed down evenly all round. Insert the bolts and see that all nuts are evenly tightened and securely locked. The sliding joint is always placed at the gearbox end.

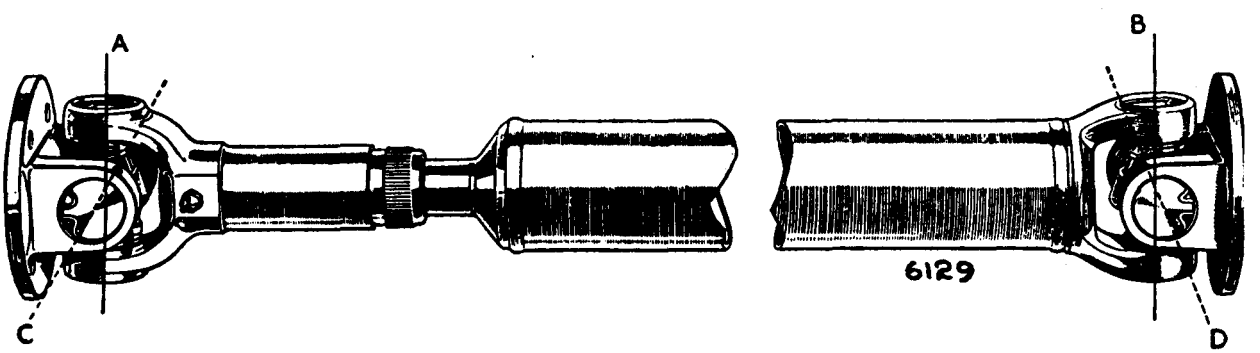

Fig. G.6

The correct method of assembling the universal joints. When the splined shaft is assembled to the drive shaft it is essential to see that the axis of each forked yoke is parallel to the other. In other words, the yoke axis (A) *must be in alignment with the yoke axis* (B), *and the flange yoke axis* (C) *must be in alignment with the flange yoke axis* (D)

NOTE.—On later models the thread of the grease nipples has been changed from ⅛ in. B.S.P. to ¼ in. A.N.F. Care must therefore be taken to ensure that correct replacement nipples are fitted if the occasion for their renewal arises.

SECTION GG

THE PROPELLER SHAFT

OF THE MORRIS MINOR (Series II) AND MORRIS MINOR 1000

GENERAL DESCRIPTION

The propeller shaft and universal joints are of the Hardy Spicer type, with needle-roller bearings.

A single shaft connects the rear axle and the gearbox. To accommodate fore-and-aft movement of the axle a sliding joint of the reverse-spline type is fitted between the gearbox and the front universal joint flange. Each joint consists of a centre spider, four needle-roller bearing assemblies, and two yokes.

Section GG.1

MAINTENANCE OF THE PROPELLER SHAFT

As the universal joint assemblies on the Morris Minor (Series II) are the same as those fitted to the Morris Minor (Series MM) the instructions given in Section G may also be followed when maintaining the Minor (Series II). However, the following differences must be noted:

(1) In order to remove the propeller shaft it is necessary to remove only the bolts and nuts securing the rear universal joint flange to the rear axle flange, when the propeller shaft may be withdrawn from the sliding joint downwards and to the rear.

(2) The sliding joint is automatically lubricated by oil from the gearbox, and no grease nipple is therefore fitted.

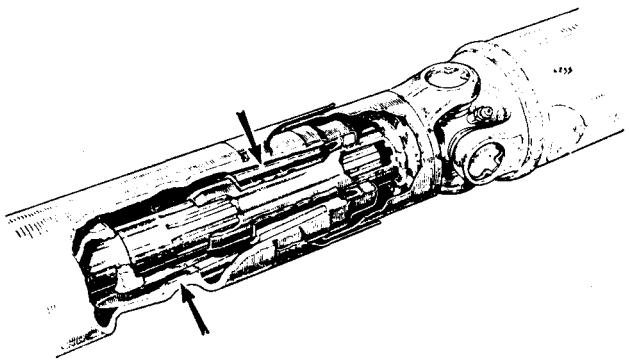

Fig. GG.1

The propeller shaft sliding joint, showing the oilways which conduct oil from the gearbox

SECTION H

THE REAR AXLE

FIRST TYPE

THE REAR AXLE AND PROPELLER SHAFT COMPONENTS

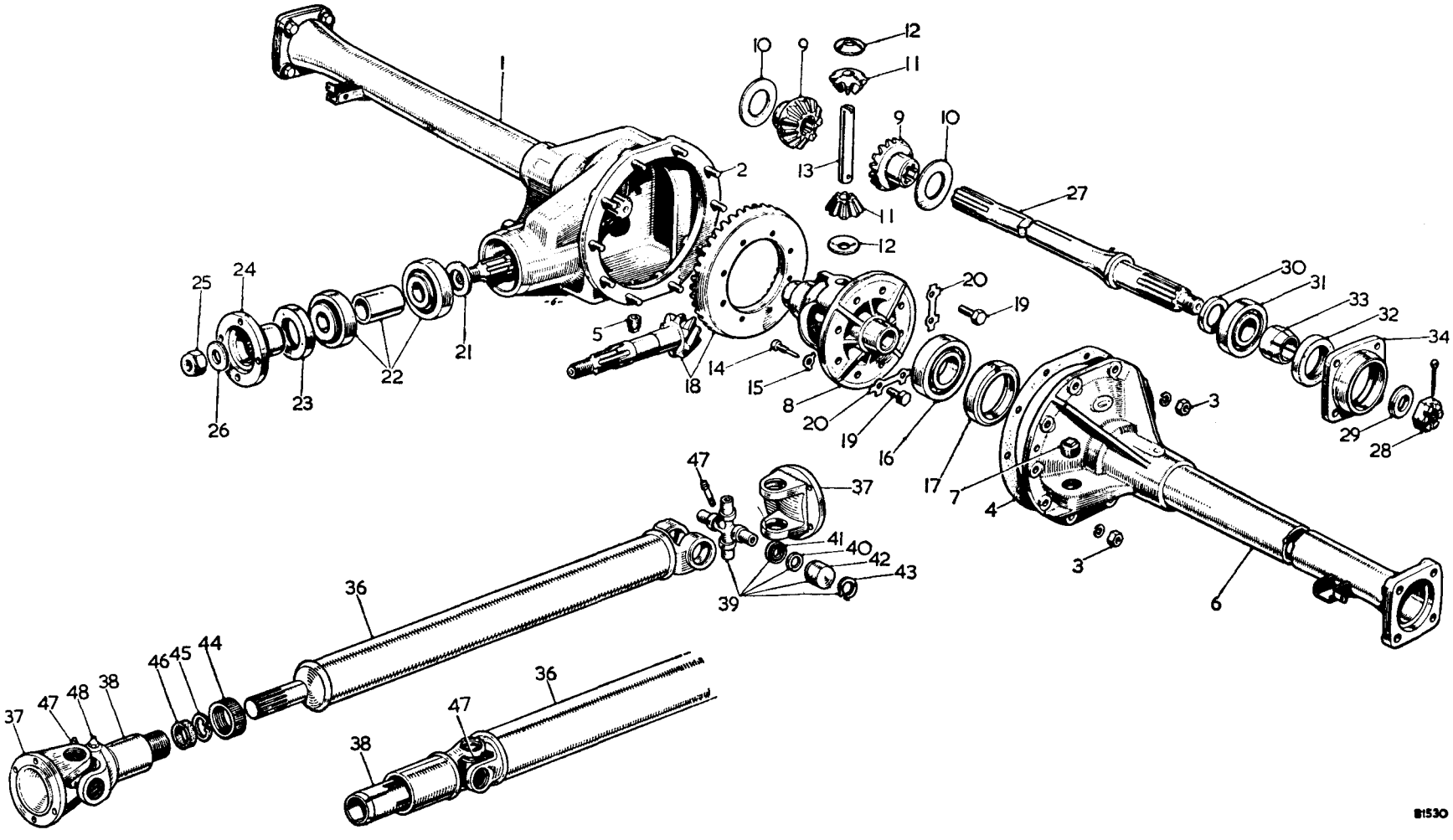

KEY TO THE REAR AXLE AND PROPELLER SHAFT COMPONENTS

No.	*Description*
1.	Axle casing assembly.
2.	Stud—axle cover.
3.	Nut—axle cover stud.
4.	Joint—casing to cover.
5.	Plug—drain.
6.	Axle cover assembly.
7.	Plug—oil filler.
8.	Cage—differential.
9.	Gear—differential.
10.	Washer—differential gear.
11.	Pinion—differential.
12.	Washer—differential pinion.
13.	Pin—pinion retaining.
14.	Bolt—pinion pin locking.
15.	Tab washer—pinion pin locking bolt.
16.	Bearing—differential.
17.	Distance collar—bearing.
18.	Crown wheel and pinion (matched).
19.	Bolt—crown wheel to cage.
20.	Locking tab—crown wheel to cage bolt.
21.	Distance piece—pinion rear bearing.
22.	Bearing and spacer assembly.
23.	Oil seal—pinion—front.
24.	Flange—universal joint.
25.	Nut—pinion.
26.	Washer—pinion—nut.
27.	Axle shaft.
28.	Nut—axle shaft.
29.	Washer—axle shaft nut.
30.	Distance washer—hub bearing.
31.	Bearing—hub
32.	Oil seal—hub.
33.	Collar—oil seal.
34.	Support—brake-plate.
36.	Propeller shaft assembly.
37.	Flange yoke.
38.	Sleeve yoke.
39.	Journal and needle bearing set.
40.	Gasket—journal.
41.	Retainer—gasket.
42.	Bearing assembly—needle.
43.	Snap ring.
44.	Dust cap.
45.	Washer—steel.
46.	Washer—cork.
47.	Grease nipple for journal.
48.	Grease nipple for sliding shaft.

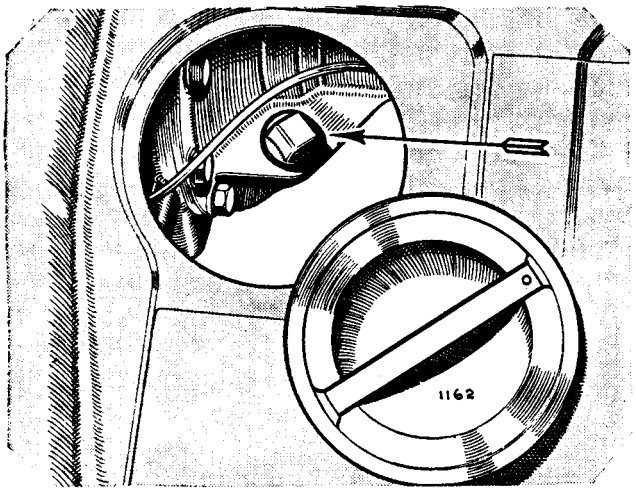

Fig. H.1

The filler and level indicating plug for the back axle is reached through the circular opening in the rear seat pan

GENERAL DESCRIPTION

The rear axle is of the semi-floating type. It is of unit construction and no repairs or adjustments apart from those connected with the half-shafts and rear wheel bearings, brake-drums, and shoe mechanism can be carried out without removing the complete axle unit from the car.

The rear wheel bearing outer races are carried in extensions of the rear axle casing and the inner races bear directly on the axle half-shafts. The wheel hubs are attached to the axle shafts by splines and a tapered split collar.

Contrary to previous Morris practice, the axle half-shafts can only be withdrawn after removing the wheel, wheel hub and brake-drum, brake back-plate assembly, and the wheel bearing housing.

The brake-drums are of cast iron and are integral with the wheel hubs.

Hypoid-type final reduction gears are used and the axle housing is divided close to its centre for assembly purposes, the pinion assembly being mounted in the right-hand half of the axle casing.

The bearings of the differential and crown wheel assembly are carried in recesses machined in the axle casing and cover, which are bolted together, and, since no inspection apertures are provided, **all adjustments have to be carried out by pre-measurement in conjunction with special gauges.**

Adjustment of the position of both the crown wheel and the pinion in the axle is effected by distance pieces, which are selected on initial assembly, and there is no other provision for adjustment. The crown wheel and pin ons are only supplied in pairs as heretofore. The use of hypoid gears enables a much larger pinion to be used, providing more silent running and a greatly increased life.

The rear brake gear is of the normal two-shoe type, operated hydraulically from the brake pedal and also mechanically by hand-operated mechanism actuating the same shoes. The operating cylinder for the shoes is mounted vertically on the brake-plate and acts directly on the brake shoes.

Adjustment is by means of a serrated snail cam with screwdriver operation through holes in the brake-drum disc, which adjusts both the hand and foot brake mechanism simultaneously.

Suspension is by means of semi-elliptic leaf springs with rubber mounting. The shackles and the spring anchorage are both fitted with flexing rubber bushes.

LUBRICATION

Oil is introduced to the axle through a filler plug on the left-hand side of the pinion housing. When replenishing or refilling, the level of the oil should not be raised above the lip of the filling aperture.

It is of the utmost importance that only HYPOID oils of the approved grades and manufacture be employed if satisfactory service is to be obtained from the hypoid gears.

Inspect the oil level at the specified intervals, and replenish if necessary to the level of the filler opening with a hypoid oil to Ref. B (page P.2).

Where specified drain off the old oil and refill with new.

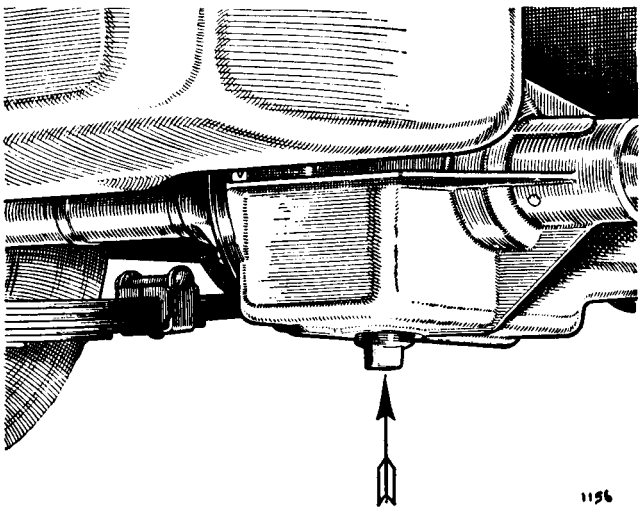

Fig. H.2

The rear axle drain plug

The drain plug is underneath the rear end of the axle casing. The capacity of the axle is given in **'GENERAL DATA'.**

Lubrication of the rear hub bearings is achieved automatically from the main oil supply and no provision is made for any other attention.

Section H.1

REMOVING AND REPLACING A BRAKE-DRUM AND HUB

Jack up the axle so that the wheel to be operated on is clear of the ground and place chocks on either side of the wheels remaining on the ground. **Release the hand brake fully—THIS IS IMPORTANT.**

Remove the road wheel by prising off the hub cover with the flat on the end of the wheel nut spanner, giving the spanner a sideways motion and **not** a radial one. The spanner end should be inserted in the depressions provided adjacent to the studs holding the cover.

Unscrew the wheel securing bolts and withdraw the wheel.

Remove the split pin from the axle nut and unscrew the nut with a set spanner, remembering that the axle half-shafts are threaded right-handed on both sides of the car and are therefore interchangeable.

The wheel hub is locked to the axle half-shaft by means of a tapered split collar in addition to the driving splines. It is therefore to be expected that some resistance will be evident when the extractor is used to free the hub from the taper.

When replacing the rear hub it is essential to make quite sure that the tapered split collar is right home against the inner race of the wheel bearing before any attempt is made to offer up the hub. It is, in fact, advisable to tap the collar lightly into position with a hide hammer, taking the utmost care not to damage it in any way. It is also essential to see that the parallel portion of the collar engaging the oil seal is absolutely free from blemishes before it is replaced and that the oil seal is not damaged in any way.

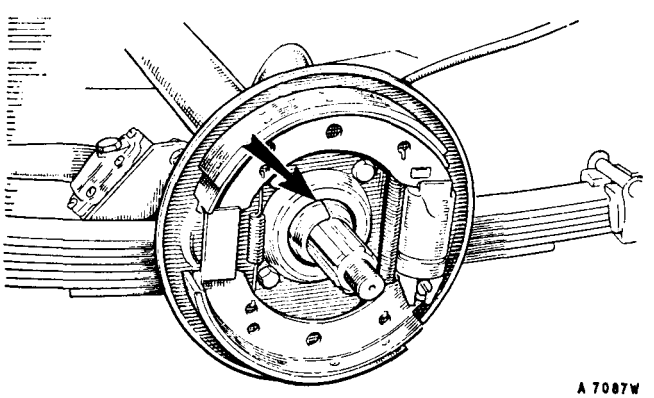

Fig. H.3

The split collar which locates the hub to the axle shaft is here shown

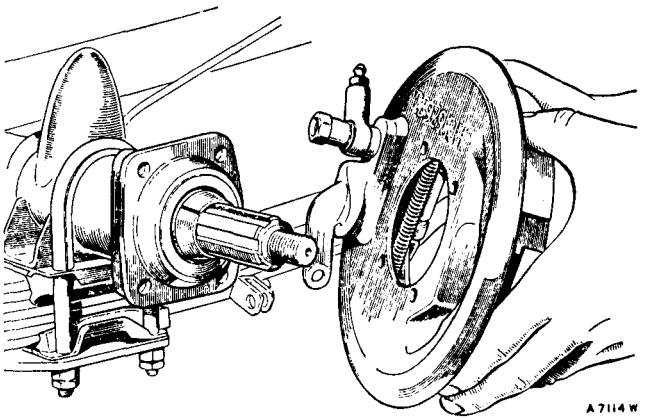

Fig. H.4

Removing the brake-plate from its anchorage to the axle flange

Section H.2

REMOVING AND REPLACING A BRAKE-PLATE ASSEMBLY

Jack up the axle and remove the wheel as in Section H.1.

See that the hand brake is fully released.

Remove the hub as in Section H.1.

If it is required to remove the brake-plate assembly to the bench for attention the Lockheed pipe should be disconnected, but this is not recommended unless absolutely necessary as it entails bleeding the brakes.

Withdraw the split pin and clevis pin attaching the brake cable to the operating lever.

The brake-plate assembly is attached to the axle flange by four bolts with the nuts fitted on the inner side of the flange. Removal of the nuts enables the bolts to be withdrawn and the brake-plate assembly to be removed.

Reassembly takes place in the reverse order to dismantling and it is essential to make sure that the retaining nuts are screwed up tight.

Do not forget to bleed the brakes if the pipe line has been disconnected.

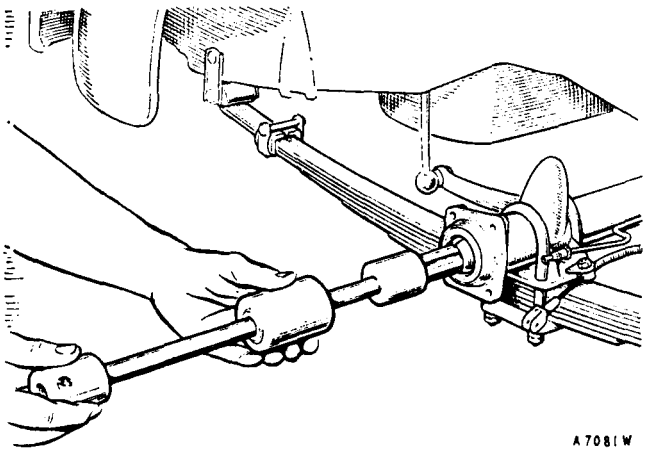

Fig. H.5
The special impulse extracting tool in position for removal of the half-shaft

Section H.3

REMOVING AND REPLACING A REAR AXLE HALF-SHAFT

Jack up the axle as outlined in Section H.1 or raise the rear of the car with a sling attached to the bumper supports.

Remove the wheel as in Section H.1.

See that the hand brake is fully released.

Remove the hub and brake-drum assembly as in Section H.1.

Remove the brake-plate and shoe assembly as in Section H.2.

Withdraw the split collar from the axle half-shaft.

Attach the axle shaft extractor (Service tool 18G 374), when the shaft, complete with bearing, housing, and oil seal, will come away.

The half-shaft can then be pressed out of the bearing.

Reassembling is a reversal of the foregoing.

When replacing an oil seal in the wheel bearing housing see that the sealing edge of the bore is towards the bearing and that it is not damaged when fitted over the split collar. It should be a good press fit in the axle end cap.

Do not forget to see that the split collar is perfectly clean and free from blemish, particularly on its parallel portion, and pushed well home against the bearing inner race before replacing the wheel hub. It is advisable to tap it lightly into contact with the axle bearing with a hide hammer, taking the utmost care not to damage it in any way in the process.

Section H.4

REMOVING THE REAR AXLE FROM THE CAR

Raise the rear of the car by means of a suitable sling attached to the bumper supports.

Remove the road wheels and release the hand brake.

Disconnect the Lockheed flexible pipe at its junction to the bracket on the under side of the body floor.

Disconnect the brake cable casings from their anchorage to the spring brackets by removing the retaining nut and spring washer.

Disconnect the brake cables by removing the clevis pin attaching the forked yoke to the brake-shoe actuating lever on the brake-plate.

Disconnect the shock absorber arms at their junction to the body by removing the retaining nut and split pin.

Support the rear axle on a suitable stand.

Mark the propeller shaft coupling flanges so that they are replaced in the same relative positions.

Uncouple the propeller shaft at the rear flange by unscrewing the four coupling nuts and bolts. Support the tail end of the propeller shaft through the aperture in the rear seat giving access to the rear axle oil filler.

Remove the rear shackle nuts and bolts.

Remove the front anchorage bolts for the springs after removing their retaining nuts. These bolts have pin spanner holes in their heads to permit them to be held against rotation while loosening or tightening up the nuts.

The axle is now free to be withdrawn on the stand rearwards from the car.

Section H.5

IMPORTANT POINTS CONCERNING ATTENTION

Attention requiring the dismantling of the axle and the replacement of parts is not advised unless this is absolutely necessary and unless you are equipped with the necessary checking gauges and a full range of distance pieces and distance collars from which to select the required new sizes. The fitting of a replacement axle, whenever possible, is advised.

Dismantling for examination and cleaning is permissible provided care is taken to refit the distance pieces and spacers in exactly the same locations.

No adjustment is provided in the accepted sense. The crown wheel and pinion are set in their correct relation to each other by means of distance pieces and distance collars selected to provide the correct location of the components on initial assembly. **Should the components be dismantled, their relative positions should be**

carefully observed and each part marked suitably so that it can be reassembled correctly in its original position.

Various components can be replaced by correctly combining the markings on the original components against those on the new parts in the manner detailed in subsequent sections.

It is important that the repairer be quite clear on this point before he undertakes the dismantling of the axle.

Distance collars between the outer races of the differential bearings and faces of the recesses machined in the axle casing and cover control the position of the crown wheel in relation to the centre line of the pinion.

Adjustment of the pinion position is made by varying the thickness of the pinion washer and that of the crown wheel by varying the thickness of the differential bearing distance collars.

The following operations are possible without the use of special tools:

(1) To replace a crown wheel and pinion by a pair carrying markings which are identical to the originals.

(2) To replace a crown wheel bearing alone, since these are of the controlled-width type, provided genuine **Morris** replacements are used.

(3) To replace an axle cover which carries markings identical to the original.

The following replacements are possible by calculations alone:

(4) To replace the differential cage by one carrying a different marking to the original.

(5) To replace an axle cover carrying different markings to the original.

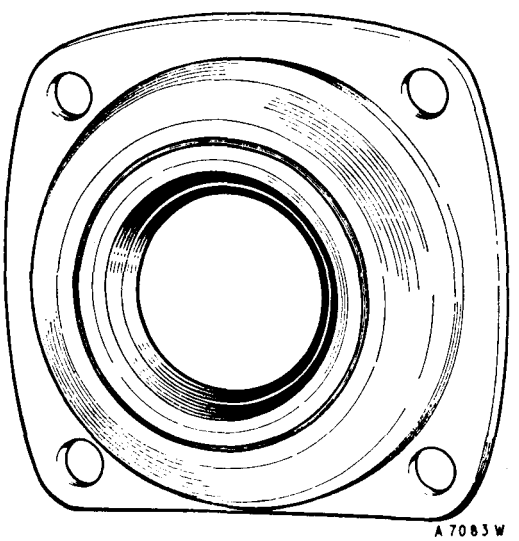

Fig. H.6

The correct way round for the oil seal is with its knife edge facing towards the bearing and towards the centre of the car

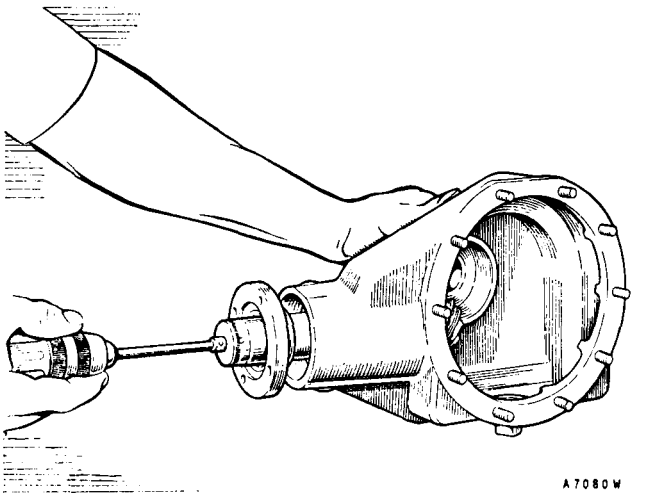

Fig. H.7

The special torque wrench in use to check the preload on the pinion shaft bearings

The following replacements can be carried out by calculation and the use of special tools:

(6) To replace an axle case carrying different markings to the original.

(7) To replace a crown wheel and pinion carrying different markings to the originals.

(8) To replace bearings on the pinion shaft.

Operations (1), (2), and (3) merely call for the fitting of the new parts in the positions occupied by the old. The remaining operations entail special precautions and are detailed subsequently.

The axle or half-shafts, rear hub bearings, brake-drums, and shoe mechanism can all be dismantled and replaced with the axle in position on the car.

Section H.6

DISMANTLING THE AXLE AND REMOVING THE DIFFERENTIAL ASSEMBLY

Remove the axle from the car as detailed in Section H.4.

To dismantle the axle first remove the hub and brake-drum assemblies as in Section H.1 and the brake-plates as in Section H.2.

Remove the axle half-shafts as detailed in Section H.3.

Remove the series of bolts joining the axle casing and cover together and carefully part them, taking care to see that both halves of the axle are suitably supported to avoid damage to the differential assembly.

The withdrawal of the axle cover from the casing releases the differential and crown wheel assembly, which can now be withdrawn.

Note that distance collars are fitted between the differential bearings and the bearing housings and that they are important as they control the position of the differential assembly in the axle.

It is essential that they be replaced in their original locations on assembly.

NOTE.—All original distance collars are marked 'O/S' and 'N/S'.

It must also be noted that the axle casing and cover are marked on the surface of one of the outside webs or tubes with one of the following figures: 0, 1, 2, 3, 4, 5, 6, all being positive.

Section H.7

DISMANTLING THE DIFFERENTIAL ASSEMBLY AND CROWN WHEEL

When the differential assembly has been removed from the axle casing as detailed in Section H.6 it is dismantled by bending back the tab of the locking plate of the bolt locating the differential pinion shaft, withdrawing the bolt, and removing the shaft.

The differential pinions can now be removed from the differential cage by swinging them round with their dished thrust plates until they register with the openings in the differential cage, through which they can be removed together with their distance piece.

The differential cage gears can then be withdrawn from inside the differential through the openings, together with their thrust washers.

The crown wheel is attached to the differential cage by bolts locked by lock plates. Bending back the tabs of the lock plates and removing the bolts releases the crown wheel from the differential cage.

NOTE.—The crown wheels are marked on their back faces with one of the following figures: +2, +1, 0 (or no marking), −1, −2.

Section H.8

EXAMINING PARTS FOR WEAR

Before examination all parts should be cleaned thoroughly.

The crown wheel bearings are of the ball type and should be renewed if necessary. They are controlled dimensionally and must only be replaced by **genuine Morris replacements.** Failure to observe this instruction will only lead to complications later.

The pinion shaft bearings are of the taper-roller type and should be renewed, as a set, complete with distance piece, if they do not run smoothly on their rollers.

The crown wheel and pinion are lapped in pairs.

It is essential, therefore, that crown wheels and pinions be stored and used in pairs as originally supplied, otherwise satisfactory results cannot be obtained.

If the inner races of the roller bearings are loose on the pinion check with a new set of bearings, and if these are also loose on the pinion shaft it is an indication that the shaft has worn; a new crown wheel and pinion should be fitted.

Fractures in the teeth, hollows, or any roughness on the surface of the teeth will render both crown wheels and pinions unserviceable.

The axle casing or axle cover (or both) should be renewed if new replacement bearings are not a light drive fit in the bores machined in their housings. Any looseness of the bearings should be overcome by renewing the bearing, the axle cover, or the axle casing.

The cage should be renewed if there is excessive wear in the bores in which the differential gears revolve.

The oil seals should be renewed if they are not a press fit in the pinion housing or wheel bearing housing, or if their central portion is loose in the outer metal casing, or if the spring is fractured or broken.

The differential gears, pinions, and pins should be renewed if there is any doubt about their condition, although more latitude in wear is permissible in these parts without detrimental effects than is the case with the crown wheel and pinion.

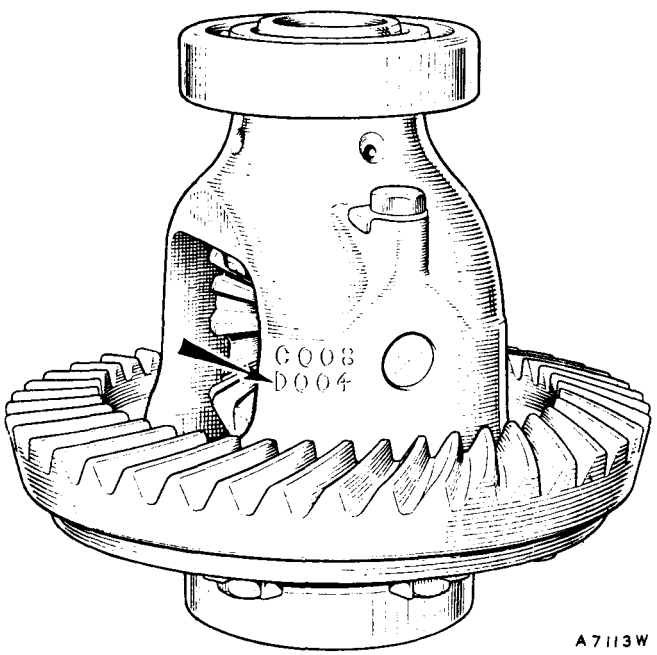

Fig. H.8

The markings on the differential cage which indicate the 'C' and 'D' dimensions essential for correct assembly

Section H.9

REPLACING THE DIFFERENTIAL CAGE

Selecting an axle casing distance collar

All differential cages are stamped with two letters—'C' and 'D'—together with a figure. The prefix 'C' indicates the dimension over the differential bearings and the dimensional range is from 0 to +·012 in. (0 to ·30 mm.); 'D' indicates the dimension from the crown wheel back face to the outside face of the right-hand bearing outer race and the range is from 0 to +·006 in. (0 to ·15 mm.) (see Fig. H.9).

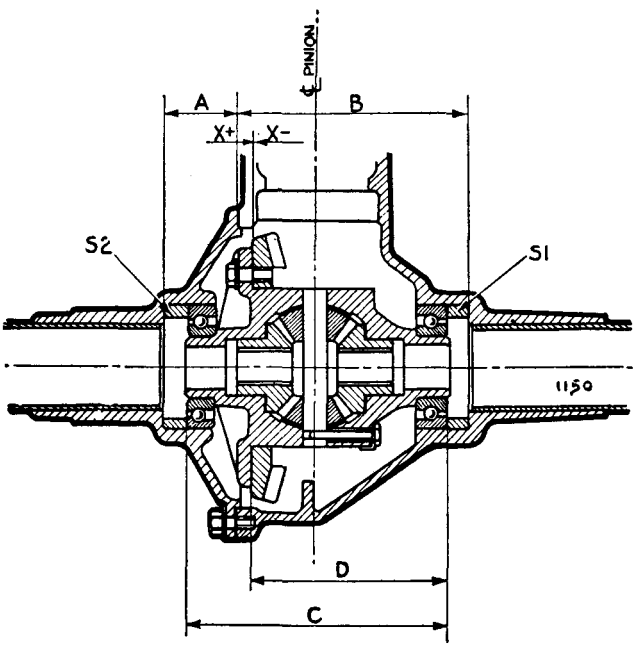

Fig. H.9

This diagram indicates the significance of the 'A', 'B', 'C', and 'D' dimensions

Differential cages can be interchanged by applying the following procedure.

Balance the 'D' dimensions of the two cages, and from the result select differential bearing distance collars which will produce the same final location of the crown wheel on assembly.

Example (1)

If the 'D' dimension of the old cage was ·005 in. (·125 mm.) and the 'D' dimension on the new cage is ·002 in. (·051 mm.), giving a difference of +·003 in. (·075 mm.), then this difference must be **added** to the old distance collar thickness.

That is to say, if the old distance collar is marked ·503 in. (13·4 mm.), the new distance collar must be ·506 in. (14·1 mm.) thick.

Example (2)

If the 'D' dimension of the old cage was ·001 in. (·025 mm.) and the 'D' dimension on the new cage is ·005 in. (·125 mm.), giving a difference of —·004 in. (·101 mm.), then this difference must be **subtracted** from the original spacer thickness.

That is to say, if the old spacer was ·509 in. (14·2 mm.) thick, then the new spacer must be ·505 in. (12·8 mm.) thick.

Selecting an axle cover distance collar

In this case subtract the 'D' dimension from the 'C' dimension on both the old and the new differential cages.

If the resultant of the dimensions on the new cage is greater than that on the old cage, the new distance collar for the axle cover is less than the old one by the difference, and vice versa.

Example (1)

Old: 'C' ·006 in.—'D' ·005 in. = ·001 in. (·15 mm.—·125 mm. = ·025 mm.).

New: 'C' ·007 in.—'D' ·002 in. = ·005 in. (·17 mm.—·05 mm. = ·12 mm.).

The resultant with the new cage is the greater by ·004 in. (·1 mm.), therefore the new distance collar should be ·004 in. **less** in thickness than the old one.

Example (2)

Old: 'C' ·002 in.—'D' ·001 in. = ·001 in. (·05 mm.—·025 mm. = ·025 mm.).

New: 'C' ·001 in.—'D' ·005 in. = —·004 in. (·025 mm.—·125 mm. = —·1 mm.).

The old resultant is here the greater by ·005 in. (·125 mm.), therefore the new distance collar must be ·005 in. thicker than the old one.

Section H.10

ASSEMBLING THE DIFFERENTIAL AND CROWN WHEEL

The differential is assembled by first inserting the differential gears inside the differential cage with their thrust washers in position.

NOTE.—When new washers are fitted it is necessary to see that they are properly bedded in or it may be difficult to insert the pinions.

The differential pinions are next inserted through the opening of the cage with their distance piece and thrust washers. The pinions are then rotated in the cage until they register with the holes in the cage for the shaft.

The pinion spindle, which should be a light push fit in the cage, is then inserted, taking care to line up the locking bolt holes.

NOTE.—The slot in the shaft can be used as a guide.

Fit the locking bolt and turn up the tab of its locking washer.

Fit the crown wheel to the differential cage after making sure that the mating surfaces are perfectly clean and the edges free from burrs.

Check the crown wheel for truth by spinning the assembly on a roller fixture with a dial gauge registering against the outer edge of the crown wheel. The maximum

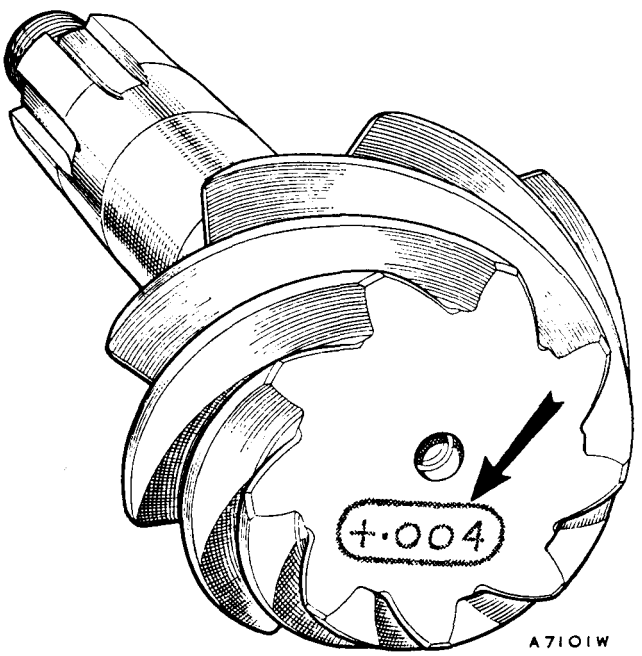

Fig. H.10
The marking of the pinion to show its dimension for fitting is indicated by the arrow

permissible error of alignment is ·001 in. (·025 mm.), and if the figure registered is in excess of this the crown wheel should be removed from the differential cage and the flange of the cage checked for truth. If necessary, fit a replacement cage.

Provided the flange is true within the permissible error, clean all parts carefully and reassemble the crown wheel to the cage in a different position to that in which it was first assembled and checked, then re-check. This process should be repeated several times before finally deciding to discard the crown wheel and pinion.

The differential ball races can now be pressed on.

If a new crown wheel or differential cage has been fitted it is essential to measure the 'C' dimensions over the differential ball races, and 'D' dimensions from the crown wheel back face to the right-hand bearing outer race outside face, and **inform the Service Department at Cowley of the change of components, quoting the new dimensions so that the necessary modification can be made to the axle history card for future reference.**

Section H.11

REPLACING A PINION

(1) The old pinion in a new axle casing.
(2) New pinion and new matched set of bearings and distance piece in an old casing.
(3) New pinion and old bearings and distance piece in an old casing.
(4) Old pinion and new matched set of bearings and distance piece in an old casing.

In all cases the pinion must be set accurately in the axle casing, remembering that the roller races and their distance pieces are supplied in sets giving the correct amount of preload on assembly. They can therefore only be replaced as 'sets' and not individually.

The pinions may be marked on their heads with one of the following figures:

A ringed figure +2, +1, 0 (or no marking), −1, −2, and possibly an unringed figure −2 or −1.

The pinion washer controls the position of the pinion in relation to the axis of the crown wheel and it is fitted between the head of the pinion and its rear bearing.

Adjustment of the pinion position is made by varying the thickness of the pinion washer. These are available in a range of thickness of ·001 in. (·025 mm.) and are marked on spares replacements only.

The pinion is fitted to the axle in the following way, using Service tool 18G 264.

Fit the pinion bearing outer races in the pinion housing, then assemble the rear pinion bearing inner race to the special dummy pinion spindle (Service tool 18G 280), and place in position in the housing, inserting it through the cover opening in the axle casing.

Fit the front bearing inner race.*

Fit the spindle nut and tighten it up to give the correct preload of 9 to 11 lb. in. (·1035 to ·1265 kg. m.) to the bearings. This must be measured with Service tool 18G 207.

Rotate the spindle eight or 10 times to seat the bearings.

Fit the checking fixture (Service tool 18G 280) in the axle cover opening and make sure that the locating arm makes firm contact with the side of the dummy spindle head.

* The bearing spacer is omitted, because the correct preload can only be obtained with the bearing in position when the universal joint flange is locked up tight. This is due to the calculated compression of the bearing spacer under this locking load.

This leaves a gap between the dummy pinion head and the checking anvil of the fixture, and this is the actual thickness of the pinion washer required for a standard pinion or one that has no marking.

Select a washer which will just slide between these faces and fit it behind the pinion head when reassembling.

To assist manufacturing conditions it is occasionally necessary that a pinion be assembled away from the standard position. If this is so, the variation is marked on the pinion head in a ring such as (+2), the sign + meaning that the centres are increased by ·002 in. (·05 mm.). Correction has to be made for this, and when the figure is + (plus) the amount must be **taken from** the washer thickness, and if the figure is — (minus) then the amount has to be **added** to the washer thickness.

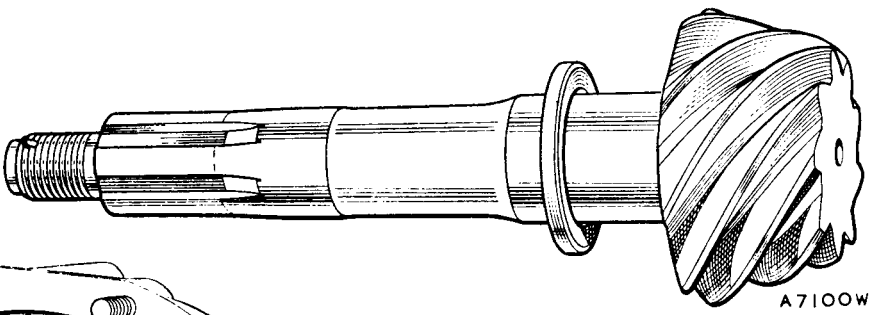

Fig. H.11 (above)
The pinion and pinion spacing washer. Note that the bevelled side of the washer bore should be against the pinion

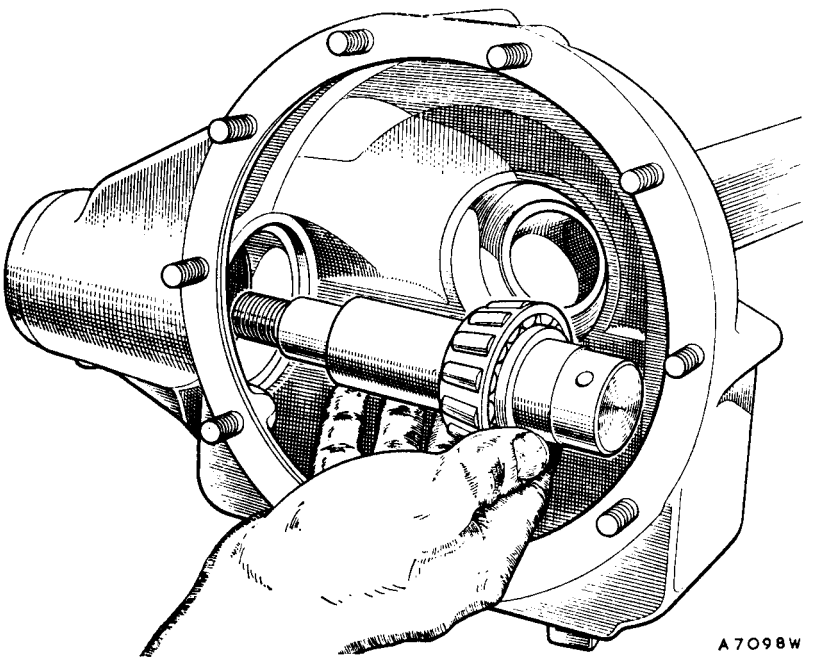

Fig. H.12 (left)
Inserting the special dummy pinion shaft into the axle casing pinion housing

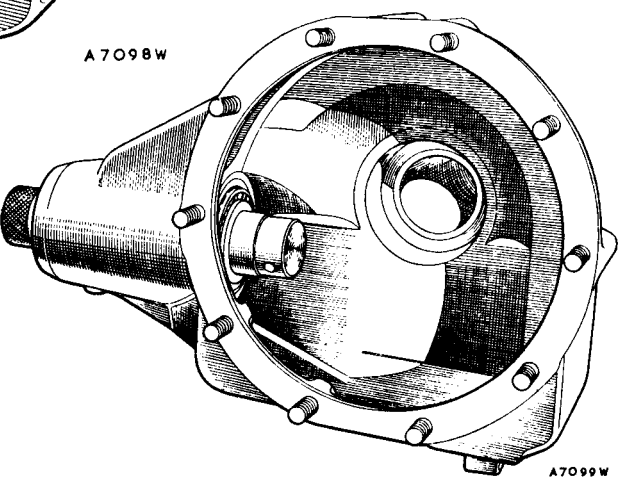

Fig. H.13 (right)
The dummy pinion shaft in position in the housing. The ground head of the dummy shaft forms the datum for establishing the correct thickness for the spacing washer

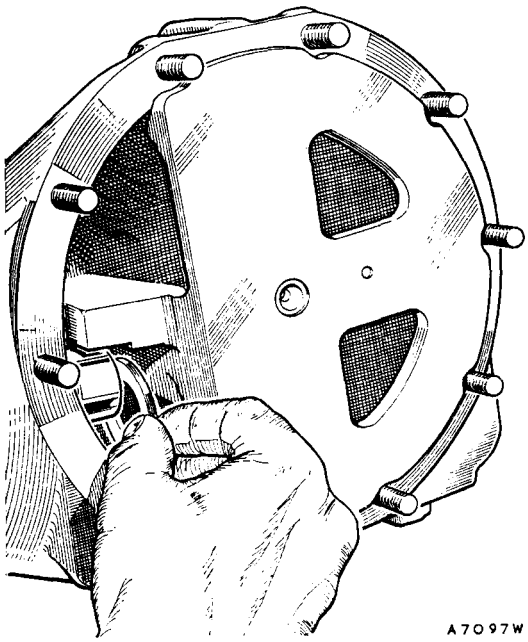

Fig. H.14

When the locating tongue of the special checking fixture is in contact with the head of the dummy pinion spindle the space between the head of the spindle and the anvil of the checking fixture determines the thickness of the pinion spacing washer

Example (1)

A washer fitting the gap of the dummy pinion with a marking of ·127 (3·19 mm.) must be replaced by a washer having the marking ·129 (3·24 mm.) when refitting a pinion with the marking −2 or −·002 (·05 mm.).

Example (2)

A washer fitting the gap of the dummy pinion bearing the marking ·127 (3·19 mm.) must be replaced by a washer marked ·125 (3·14 mm.) when the pinion is marked +2 or +·002 (·05 mm.) on its head.

A plain or unringed figure may be marked on the pinion head in addition to a ringed figure, but this is only an indication of the variation of the pinion head thickness from standard and is always minus. It has no bearing on the pinion setting.

When the correct spacing washer has been decided upon the actual pinion assembly can take place, **but the importance of making the measurements correctly must be appreciated, since it is impossible to check the adjustment when the axle is assembled.**

The actual pinion assembly is carried out by threading the special pinion washer just selected on the pinion shaft, bevelled side against the pinion, and pressing on the rear roller-bearing inner race with its largest diameter against the washer. This sub-assembly is then inserted into the casing through the axle cover opening and located in position in the pinion housing of the axle casing.

The distance piece and forward roller-bearing inner race are next passed onto the pinion shaft with the largest diameter of the inner race facing forward. These components are followed by the pinion flange with its retaining washer and nut. Tighten up the nut firmly.

Rotate the pinion to ascertain that the correct degree of preload is present. The pinion should present the same resistance to rotation as was evident when using the special dummy spindle.

If the preload is correct undo the nut and remove the washer and flange, fit the oil seal (sharp edge of the bore towards the bearing), and replace the pinion flange, retaining washer, and nut.

Finally, tighten up the nut and fit the split pin.

Section H.12

FITTING A NEW AXLE CASING

When a new axle case is being fitted it is necessary to refit the pinion as detailed in Section H.11 and select a new distance collar for the differential bearing in the manner here indicated.

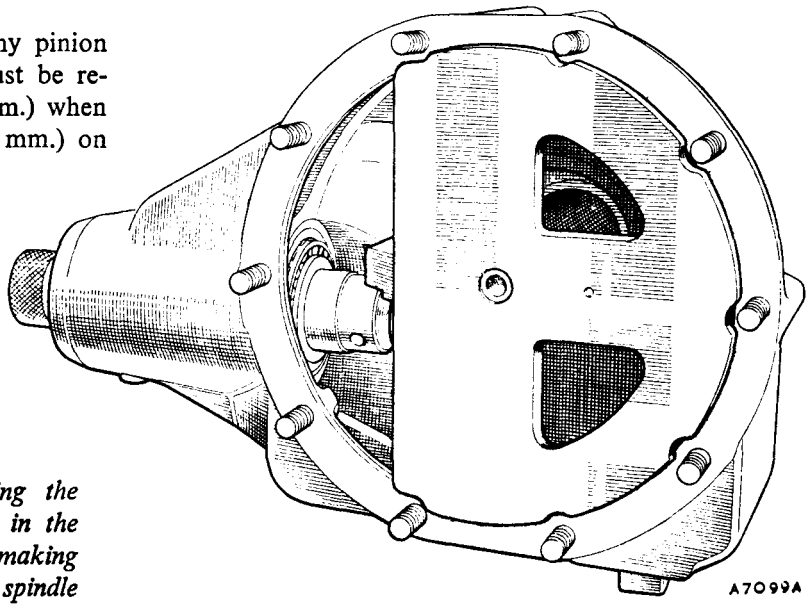

Fig. H.15

The special checking fixture for determining the correct spacing washer thickness in position in the axle casing. Note that its locating tongue is making contact with the head of the dummy pinion spindle

Compensation for variations in the depth of the differential bearing bores is made by taking note of the markings on the old and new axle casings. For example: if the old casing is +·002 in. (·05 mm.) and the new one +·004 in. (·10 mm.), the positive difference ·002 in. (·05 mm.) is added to the existing differential bearing distance collar. That is to say, if the old distance collar is marked ·505 in. (·125 mm.), then the required new distance collar is ·507 in. (·175 mm.).

Similarly, if the old casing is +·005 in. (·175 mm.) and the new one +·001 in. (·025 mm.), the resulting difference is negative, —·004 in. (·10 mm.), and must be subtracted from the bearing distance collar, i.e. if the old distance collar is ·509 in. (·22 mm.), the required new distance collar is ·505 in. (·125 mm.).

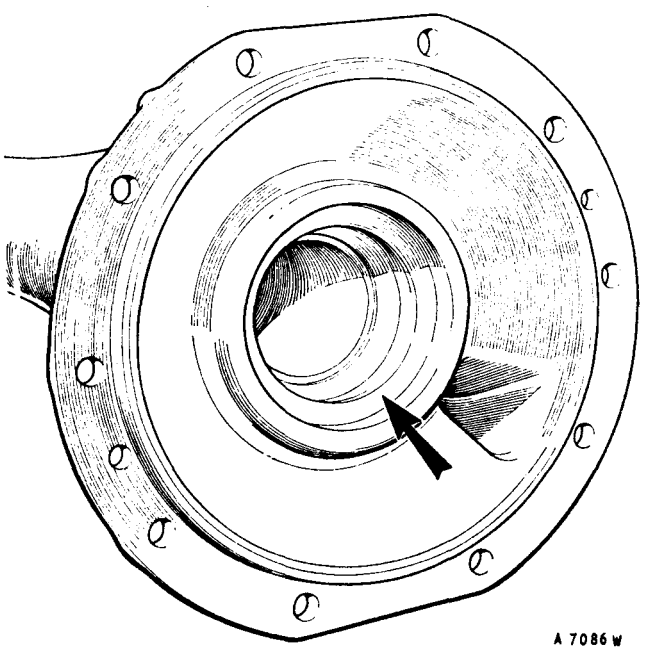

Fig. H.16

The location of the differential spacer in the axle casing is indicated by the arrow

Section H.13

FITTING A NEW AXLE HOUSING COVER

When a new axle cover is being fitted it is not necessary to make any adjustment to the pinion.

Compensation must, however, be made for variations in the depth of the differential bearing housing in the same manner as that outlined for the axle casing in Section H.12, and the same calculations for the selection of the required new distance collar for the differential bearings are involved.

Section H.14

REPLACING A CROWN WHEEL AND PINION HAVING MARKINGS DIFFERENT TO THE ORIGINAL

NOTE.—The crown wheels and pinions are manufactured in matched pairs and are not renewable individually but only in pairs. The need for replacing either a pinion or crown wheel therefore necessitates the fitting of a new pair of components and the operations of fitting a new pinion and new crown wheel are involved.

The crown wheels are marked on their back faces with one of the following markings: +2, +1, 0 (or no marking), —1, and —2.

Read off the markings from the back face of the old crown wheel and note the difference between this and the marking on the new crown wheel. For example: if the old one is marked —1 (—·001 in.) (·025 mm.) and the new one +2 (·002 in.) (·050 mm.), the dimensional difference is +·003 in. (·075 mm.). To reassemble correctly it is thus necessary to fit in the axle casing a new distance collar which is ·003 in. (·075 mm.) **thicker** than the old one, and a new one ·003 in. (·075 mm.) **thinner** than the old one in the axle cover.

Note that the **combined** thicknesses of these spacers must remain the same.

The setting of the pinion is carried out as indicated in Section H.11.

Section H.15

REASSEMBLING THE AXLE

Provided that no replacement parts are fitted, the assembly of the axle is quite straightforward if proper note is taken of the positions of various distance pieces, washers, and spacers, and they are replaced in exactly their original locations.

Assembly of the differential and crown wheel is described in detail in Section H.10.

Assembly of the pinion housing is given in detail in Section H.11.

The assembly of the axle cover to the axle casing is carried out with a gasket between their joint surfaces. The calculations made for adjustment provide for the thickness of the gasket, but it is important that a genuine **Morris** replacement is used. (Thickness of gasket ·005 in. (·125 mm.) when compressed.)

The differential assembly should be assembled in the axle casing, making sure that its bearing in the axle casing is right home in its housing and that a gasket is in position on the joint surface. The axle cover is then placed in position over the axle casing

and carefully pushed home till the joint faces are in contact.

The 10 nuts fastening the halves of the axle housing together are then screwed lightly in position and finally tightened up a quarter of a turn at a time in a diagonal sequence to ensure even tightening and absence of distortion.

The brake-plates are refitted in the manner described in Section H.2. The axle half-shafts are refitted in the manner described in Section H.3. The hub and brake-drum assemblies are refitted as in Section H.1.

Make sure that the pinion, differential, and axle half-shafts are free from undue restriction before replacing the axle in the car.

working load on springs to avoid undue stress on the rubber bushes, and refit the split pins.

Attach the propeller shaft to the axle pinion flange, taking care that it is fitted correctly so that the universal joint forks at either end of the propeller shaft are in line with one another (see illustration, page G.4).

If the flanges have been marked when dismantling as indicated in Section H.4 this will present no difficulty.

Refit the shock absorber arms to their anchorage bolts.

Couple the Lockheed brake flexible pipe to its union at the body bracket.

Attach the hand brake cable forked yokes to the shoe actuating levers at the back of the brake-plates

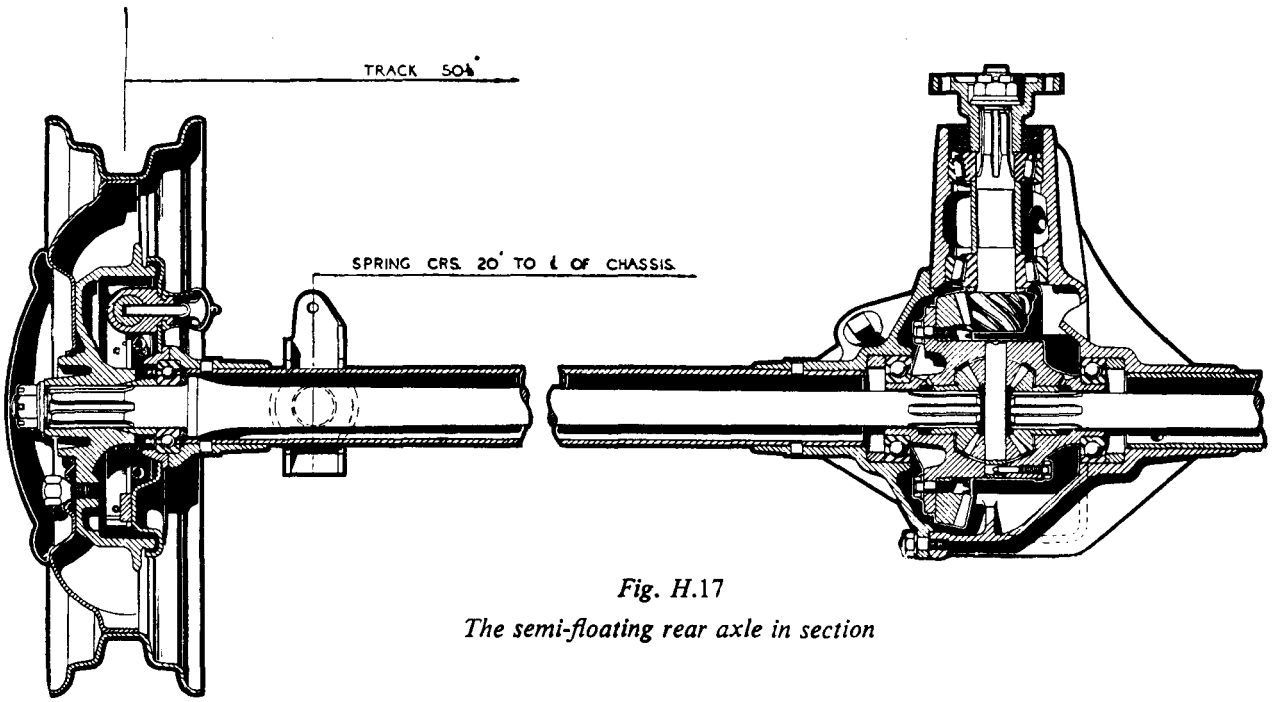

Fig. H.17
The semi-floating rear axle in section

Section H.16

REFITTING THE AXLE TO THE CAR

The assembled axle is replaced in the car by raising the rear of the car sufficiently to enable the axle to be wheeled into position, preferably on a suitable stand.

Couple up the front ends of the springs to the chassis brackets, making sure that the rubber washers are fitted on either side of the Silentbloc bushes between the bush and the bracket. The circular head of the bolt is towards the inside of the car.

Couple the rear ends of the springs to the rear shackles, making sure that the flanged rubber bushes are in good condition before fitting. **Make sure that the spring shackle bolts and anchorage bolts are tightened with the normal**

and attach the brake cable casing stops to the spring brackets.

Bleed the brakes as indicated in Section M.3.

Fit the road wheels and lower the car.

Fit the plated wheel covers.

Section H.17

USING SERVICE TOOL 18G 264

This tool is illustrated on page Q.8 and is used to remove and replace the outer races of the pinion shaft taper-roller bearings.

To remove a front bearing cup assemble the tool with the wing nut, thrust race body, and bell housing in position and with the cone screwed on the end of

the centre screw. Assemble the centre screw and split adaptors with the bearing cup, with the tapered cone locating in the rear of the split adaptor. Wind the wing nut to remove the bearing cup.

When replacing a front bearing assemble the wing nut and body on the centre screw, place the sliding cone in position with the flange towards the body, and screw on the screwed cone. Hold the rear axle casing with the pinion housing sloping downwards.

Assemble the front bearing and split adaptor with the sliding cone and pass the centre screw through the axle casing. Assemble the split adaptors for the rear bearing cup with the bearing and pull the threaded cone into this assembly.

Feed in the front bearing and wind down the wing nut to replace the bearing cups.

To remove a rear bearing cup screw the threaded cone onto the centre screw with its flange towards the handle. Assemble the split adaptor in the rear bearing, pushing forward the centre screw until the threaded cone is located in the adaptor. By striking the domed head of the centre screw with a copper hammer the rear bearing cup will be removed.

When replacing a rear bearing assemble the tool with the wing nut, body, and cup in position, with the cone screwed on the end of the centre screw. Assemble the split adaptor, bearing cup, and threaded cone. Next, pass the centre screw through the axle casing and screw on the threaded cone, with the bearing cup and split adaptor still assembled with it. Centralize the bell housing on the axle casing and wind down the wing nut to pull the bearing into position.

SECTION HH

THE REAR AXLE

SECOND TYPE

THE REAR AXLE COMPONENTS

(Second Type)

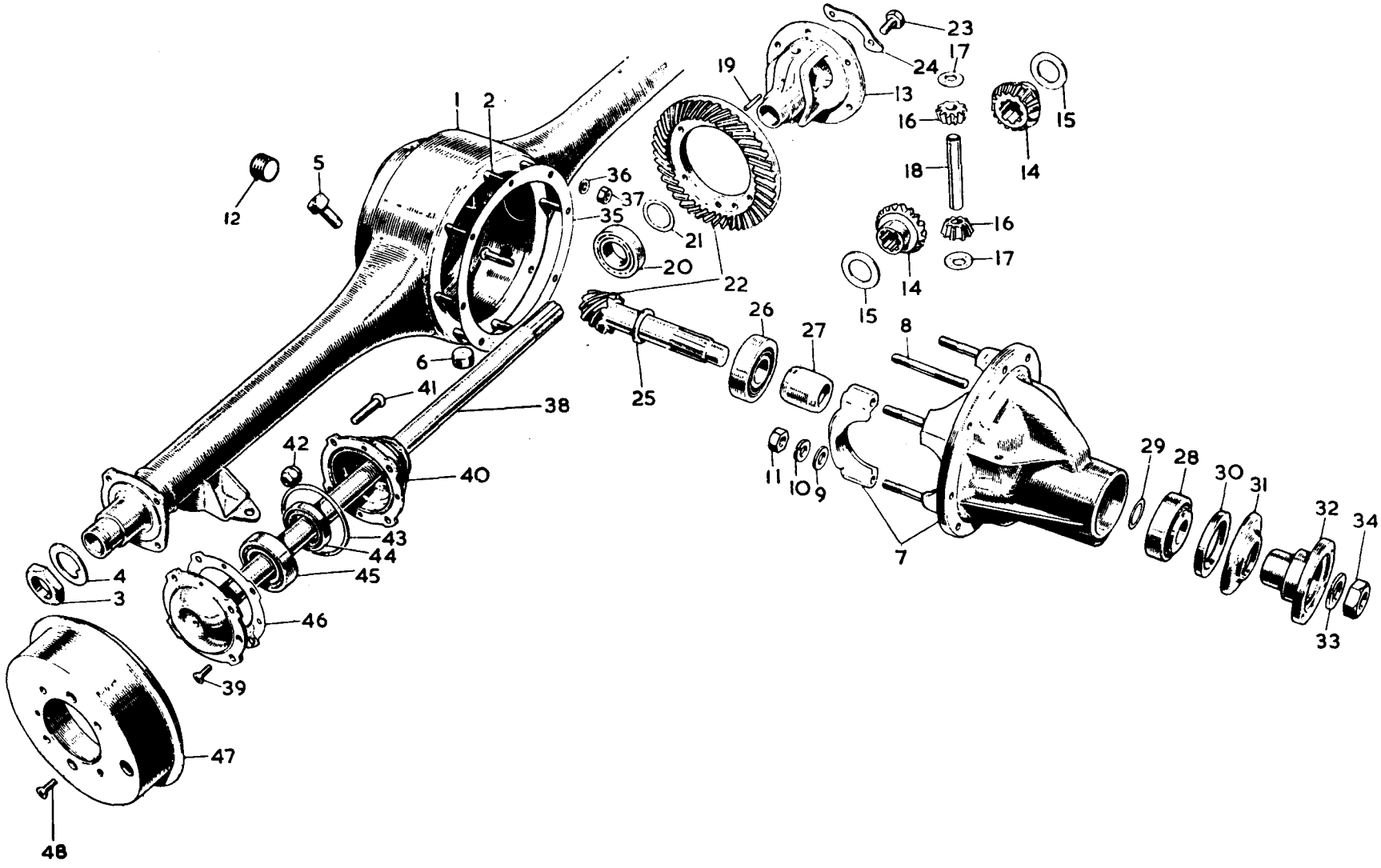

KEY TO THE REAR AXLE COMPONENTS (Second Type)

No.	*Description*
1.	Axle casing.
2.	Stud—differential carrier.
3.	Nut—bearing retainer.
4.	Lock washer—bearing nut.
5.	Breather.
6.	Oil drain plug.
7.	Carrier assembly.
8.	Stud—cap.
9.	Washer for nut (plain).
10.	Washer for nut (spring).
11.	Nut for stud.
12.	Oil filler and level plug.
13.	Differential cage.
14.	Gear.
15.	Thrust washer—gear.
16.	Pinion.
17.	Thrust washer—pinion.
18.	Pinion pin.
19.	Peg—pinion pin.
20.	Bearing.
21.	Bearing packing washer.
22.	Crown wheel and pinion.
23.	Bolt to cage.
24.	Locking washer for bolt.
25.	Thrust washer—pinion.
26.	Inner bearing—pinion.
27.	Distance piece.
28.	Outer bearing—pinion.
29.	Shim—outer bearing.
30.	Oil seal.
31.	Dust cover.
32	Universal joint flange.
33.	Washer for nut (spring).
34.	Pinion nut.
35.	Joint—axle casing.
36.	Washer for nut (spring).
37.	Nut—axle casing.
38.	Axle shaft.
39.	Screw—hub.
40.	Hub assembly.
41.	Wheel stud.
42.	Nut—wheel stud.
43.	Ring—oil seal (rubber).
44.	Oil seal.
45.	Bearing.
46.	Joint—axle shaft.
47.	Brake drum.
48.	Locating screw—brake drum.

GENERAL DESCRIPTION

The second-type rear axle fitted to later models may be identified by the road wheel fixing, which is by UNF. studs and nuts in place of the original bolt fixing.

The rear axle is of the three-quarter-floating type incorporating hypoid final reduction gears with ratio 8/43. The axle shafts, pinion, and differential assemblies can be withdrawn without removing the axle from the vehicle.

The rear wheel bearing outer races are located in the hubs, and the inner races are mounted on the axle tube and secured by nuts and lock washers. Wheel studs in the hubs pass through the brake-drums and axle shaft driving flanges. Brake-drums are located on the hub flange by two countersunk screws in each.

The differential and pinion shaft bearings are preloaded, the amount of preload being adjustable by shims. The position of the pinion in relation to the crown wheel is determined in manufacture. The backlash between the gears is adjustable by shims.

Suspension is by rubber-mounted semi-elliptic leaf springs, and the shackles are fitted with rubber bushes of the flexing type.

LUBRICATION

The axle is filled or topped up through the filler level plug at the right-hand side of the differential carrier (earlier models) or on the back of the axle casing (later models) by means of an oil gun with a special adaptor.

It is of the utmost importance that only Hypoid oils of the approved grades and manufacture are used if satisfactory service is to be obtained from the hypoid gears.

Inspect the oil level at the specified intervals, and top up as necessary to the level of the filler opening with oil to Ref. B, page PP.2.

Where specified drain off the old oil and refill with new. The capacity of the axle is given in **'GENERAL DATA'**.

The hub bearings are automatically lubricated from the axle and no provision is made for any other attention.

Section HH.1

REMOVING AND REPLACING A BRAKE-DRUM AND AXLE SHAFT

Jack up the car and place blocks under the spring as close as possible to the axle.

Remove the wheel.

Release the hand brake.

Unscrew and remove the two countersunk drum locating screws and tap the drum from the hub. It may be necessary to release the brake adjustment slightly if the shoes hold the drum.

Unscrew the countersunk locating screw in the axle shaft driving flange.

Withdraw the axle shaft by gripping the flange or carefully prising it with a screwdriver. If the latter method is used the paper washer may be damaged and must then be renewed when reassembling.

To replace the shaft and drum reverse the above sequence of operations, but note that in some models the flange locating screw is shorter than the drum locating screws.

Section HH.2

REMOVING AND REPLACING A HUB

Remove the drum and axle shaft as detailed in Section HH.1.

Knock back the tab of the hub nut locking washer and unscrew the nut (Fig. HH.1) with Service tool 18G 152 or a suitable box spanner.

Tilt the lock washer to disengage the key from the slot in the threaded portion of the axle casing; remove the washer.

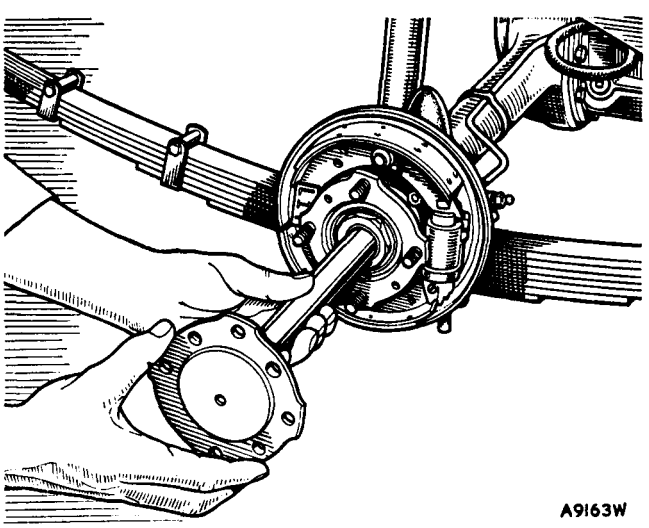

Fig. HH.1

Withdrawing an axle shaft. Note the hub retaining nut

The hub can then be withdrawn with the special puller (Service tools 18G 304, 18G 304 F, and 18G 304 H). The bearing, washers, and oil seal will also be withdrawn.

The bearing is not adjustable and is replaced in one operation. Use Service tool 18G 134 and adaptor 18G 134 Q.

When reassembling it is essential that the outer face of the bearing should protrude beyond the face of the hub and the paper washer from ·001 to ·004 in. (·025 to ·102 mm.) when the bearing is pressed into position. This ensures that the bearing is gripped between the abutment shoulder in the hub and the driving flange of the axle shaft.

Refit the hub assembly to the axle casing and drift it into position with Service tool 18G 134 and adaptor 18G 134 Q.

Replace the locking washer and nut, tighten the nut, and bend the locking washer over one of the flats.

Assemble the axle shaft and brake-drum.

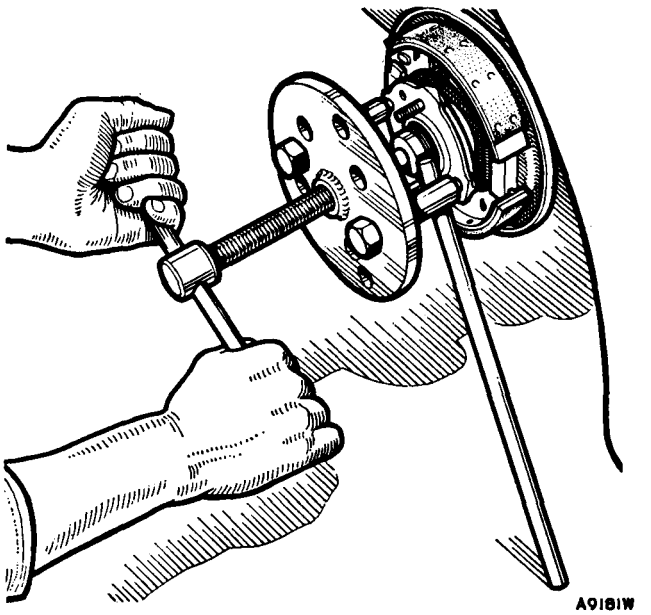

Fig. HH.2

Pulling the rear hub with the special extractor. Rotation of the hub is prevented by the bar shown on the right

Section HH.3

RENEWING THE PINION OIL SEAL

Mark the propeller shaft and pinion shaft driving flanges so that they can be replaced in the same relative positions, and disconnect the propeller shaft, carefully supporting it.

Unscrew the nut in the centre of the driving flange using Service tool 18G 34 A to prevent the flange from turning. Remove the nut and washer and withdraw the flange and pressed end cover from the pinion shaft.

Extract the oil seal from the casing.

Press a new seal into the casing with the edge of the sealing ring facing inwards.

Replace the driving flange and end cover, taking care not to damage the edge of the oil seal, and tighten the nut with a torque wrench (Service tool 18G 372) to a reading of 140 lb. ft. (19·4 kg. m.).

Reconnect the propeller shaft, taking care to fit the two flanges with the locating marks in alignment.

Section HH.4

REMOVING THE DIFFERENTIAL PINIONS

Remove the axle shafts as detailed in Section HH.1.

Mark the propeller shaft and pinion shaft driving flanges so that they can be replaced in the same relative positions; unscrew the self-locking nuts and disconnect the joint.

Unscrew the eight nuts securing the bevel pinion and gear carrier casing to the axle banjo.

Withdraw the carrier complete with the pinion shaft and differential assembly.

Make sure that the differential bearing housing caps are marked so that they can be replaced in their original positions, then remove the four nuts and spring washers. Withdraw the bearing caps and the differential assembly.

Tap out the dowel pin locating the differential pinion shaft. The diameter of the pin is ⅛ in. (3·18 mm.) and it must be tapped out from the crown wheel side as the hole into which it fits has a slightly smaller diameter at the crown wheel end to prevent the pin passing right through. It may be necessary to clean out the metal peened over the entry hole with a ⅛ in. (3·18 mm.) drill in order to facilitate removal of the dowel pin. Drive out the differential pinion shaft. The pinions and thrust washers can then be removed from the cage.

Section HH.5

REPLACING THE DIFFERENTIAL PINIONS

Examine the pinions and thrust washers and renew as required.

Replace the pinions, thrust washers, and pinion shaft in the differential cage and insert the dowel pin. Peen over the entry hole.

Reassembly is now a reversal of the instructions given in Section HH.4. Refill the axle with fresh oil to Ref. B (page PP.2).

NOTE.—If it proves necessary to fit any new parts other than those detailed in Sections HH.2, HH.3, or HH.5 the axle assembly must be set up as in Section HH.7.

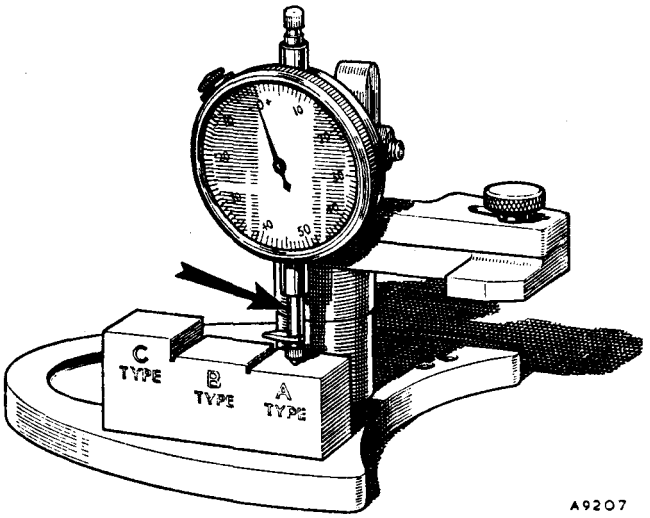

Fig. HH.3

Setting the dial gauge to zero on the stepped gauge block for determination of the pinion position. The arrow indicates the extension to the contact foot (Service tools 18G 191 and 18G 191 A)

Section HH.6

DISMANTLING THE CROWN WHEEL AND PINION

Remove the differential assembly as detailed in Section HH.4.

Remove the differential bearings from the differential cage, using Service tool 18G 47 C and adaptors 18G 47 M. Note that the thrust face (Fig. HH.6) of each bearing is marked with the word 'THRUST', and that shims are fitted between the inner ring of each bearing and differential cage.

Knock back the tabs of the locking washers, unscrew the bolts securing the crown wheel to the differential, and remove the crown wheel from the differential cage.

Unscrew the pinion nut; remove the driving flange and pressed end cover.

Drive the pinion shaft towards the rear through the carrier; it will carry with it the inner race and the rollers of the rear bearing, leaving the outer race and the complete front bearing in position.

Tap out the inner race of the front bearing and the oil seal. The outer races should be withdrawn with Service tool 18G 264 with adaptors 18G 264 D and 18G 264 E.

Slide off the pinion sleeve and the shims; withdraw the rear bearing inner race from the pinion shaft with tool 18G 285, noting the spacing washer against the pinion head.

Section HH.7

ASSEMBLING AND SETTING THE CROWN WHEEL AND PINION ASSEMBLY

Apart from the fitting of components as detailed in Sections HH.2, HH.3, and HH.5, it is not permissible to fit any new parts (e.g. crown wheel and pinion, pinion bearings, differential bearings, etc.) to the axle assembly without working through the procedure given in this section. Furthermore, if a new crown wheel or a new pinion is needed, **a mated pair—crown wheel and pinion—must be fitted.**

Fitting a new crown wheel and pinion involves four distinct operations:

(1) Setting the position of the pinion.

(2) Adjusting the pinion bearing preload.

(3) Setting the crown wheel position.

(4) Adjusting the backlash between the gears.

The following special Service tools are required to enable these operations to be carried out correctly:

(1) Bevel pinion and differential setting gauge.

(2) Bevel pinion inner race remover and replacer.

(3) Bevel pinion outer race remover and replacer.

(4) Bevel pinion preload gauge.

1. SETTING THE PINION POSITION

(1) Fit the bearing outer races to the gear carrier, using the special pinion race replacing tool.

(2) Smooth off the pinion head with an oil-stone, but do not erase any markings that may be etched on the pinion head.

(3) Assemble the pinion and rear bearing with a washer of known thickness behind the pinion head.

(4) Position the pinion in the gear carrier without the bearing spacer and oil seal.

(5) Fit the inner ring of the front bearing and the universal joint driving flange and tighten the nut gradually until a bearing preload of 8 to 10 lb. in. (·09 to ·12 kg. m.) is obtained.

(6) Remove the keep disc from the base of the magnet. Adjust the dial indicator to zero on the machined step 'A' of the setting block (Service tools 18G 191 and 18G 191 A).

(7) Clean the pinion head and place the magnet and dial indicator in position (Fig. HH.4). Move the indicator arm until the foot of the gauge rests on

the centre of the differential bearing bore at one side and tighten the knurled locking screw. Obtain the maximum depth reading and note any variation from the zero setting. Repeat the check in the opposite bearing bore. Add the two variations together and divide by two to obtain a mean reading.

(8) Take into consideration any variation in pinion head thickness. This will be shown as an unbracketed figure etched on the pinion head and will always be minus (−). If no unbracketed figure is shown, the pinion head is of nominal thickness.

Using the mean clock gauge reading obtained and the unbracketed pinion head figure (if any), the following calculation can be made:

(*a*) **If the clock reading is minus** add the clock reading to the pinion head marking, the resulting sum being minus. **Reduce** the washer thickness by this amount.

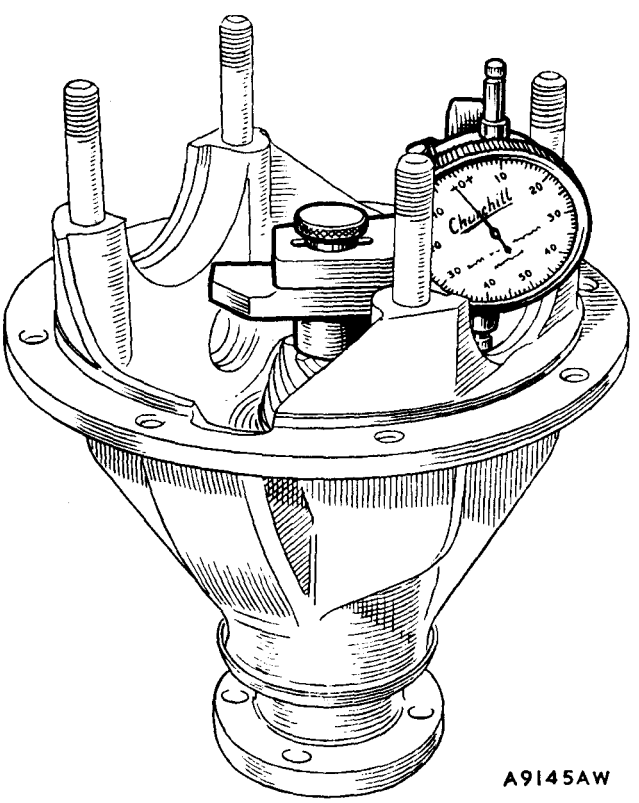

Fig. HH.4

The Service tool in position on the pinion with the dial indicating the variation of the setting from standard

Example

Clock reading	−·002 in.
Pinion marking	−·005 in.
Variation from nominal ..	−·007 in.

Reduce the washer thickness by this amount.

(*b*) **If the clock reading is plus and numerically less** than the pinion marking **reduce** the washer thickness by the difference.

Example

Pinion marking	−·005 in.
Clock reading	+·003 in.
Variation from nominal ..	−·002 in.

Reduce the washer thickness by this amount.

(*c*) **If the clock reading is plus and numerically greater** than the pinion marking **increase** the washer thickness by the difference.

Example

Clock reading	+·008 in.
Pinion marking	−·003 in.
Variation from nominal ..	+·005 in.

Increase the washer thickness by this amount.

The only cases where no alterations are required to the washer thickness are when the clock reading is **plus** and **numerically equal** to the unbracketed pinion marking, or the clock reading is zero and there is no unbracketed marking on the pinion head.

(9) Allowance should then finally be made as follows for the mounting distance marked on the pinion head in a rectangular bracket.

If the marking is a **plus** figure **reduce** the washer thickness by an equal amount.

If the marking is a **minus** figure **increase** the washer thickness by an equal amount.

A tolerance of ·001 in. is allowed in the thickness of the washer finally fitted.

2. ADJUSTING PINION BEARING PRELOAD

(1) A washer of the thickness indicated by the use of the tool and calculations should now be fitted under the pinion head, and the pinion assembled with bearings, pinion bearing distance piece, shims to the value of approximately ·008 in. (·20 mm.), oil seal, and universal joint flange.

(2) Prevent the universal joint flange from turning and tighten the pinion nut gradually to a torque spanner reading of 140 lb. ft. (19·4 kg. m.). **Checks** should be made during the tightening (using Service tool 18G 207) to ensure that the pinion bearing preload does not exceed 13 lb. in. (·149

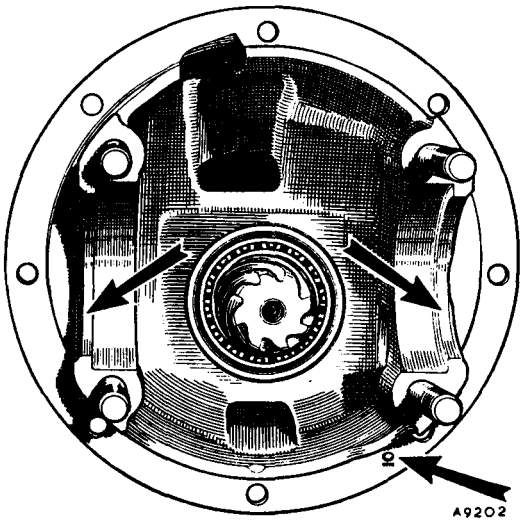

Fig. HH.5

The two upper arrows indicate the locating flanges for the differential bearings, while the lower arrow shows the deviation from standard stamped on the first series of axles

kg. m.). When the nut is correctly tightened it should provide a pinion bearing preload of 11 to 13 lb. in. (·126 to ·149 kg. m.). The shim thickness must be increased if the preload is too great, or reduced if it is insufficient. When the correct preload is obtained no further attention is needed so far as the pinion is concerned.

3. SETTING THE CROWN WHEEL POSITION

The method of setting the position of the crown wheel assembly depends upon the markings given on the differential gear carrier and differential gear cage. On the first series of axles only one marking was provided as indicated in Fig. HH.5 and the thickness of shims required was determined by measurement and calculation.

The second series of axles are stamped with 'A', 'B', 'C', and 'D' dimensions as indicated in Fig. HH.8, and the shim thickness necessary to locate the crown wheel correctly is determined by the use of Service tools 18G 191 and 18G 191 A and calculation.

The first series of axles

(1) Before fitting the crown wheel and differential assembly to the differential carrier it is necessary to calculate the amount of shim thickness required behind each differential bearing, i.e. between the bearing and the differential cage shoulder. To facilitate this calculation a machining tolerance is indicated by a stamped number on the carrier adjacent to the bearing bore.

(2) When the differential assembly is correctly mounted in the gear carrier the bearings should be preloaded, the preload being obtained by 'pinching' the bearings to the extent of ·002 in. (·05 mm.) on each bearing.

To give the required 'pinch' the distance over the outer faces of the bearings measured over the differential assembly (Fig. HH.6) must be ·004 in. (·1 mm.) greater than that between the locating flanges of the bearing housings in the gear carrier (Fig. HH.5). This over-all dimension is adjustable by varying the thickness of shimming on the differential cage spigots between the inner races of the bearings and the differential cage. The same shims are also used for adjusting the backlash between the teeth as explained below.

The distance between the differential bearing housings in the gear carrier is machined to the limits 5·336 to 5·338 in. (135·53 to 135·58 mm.). On the first series of axles fitted any variation from this dimension was indicated by a single figure stamped on one of the bearing housings.

To determine the required thickness of shims on the first series of axles proceed as follows.

Note the figure marked on the gear carrier and add it to the standard dimension of 5·336 in. (135·53 mm.). The result is the actual distance between the bearing housing locating flanges in that particular axle. If there is no mark on the carrier the dimension is 5·336 in. (135·53 mm.).

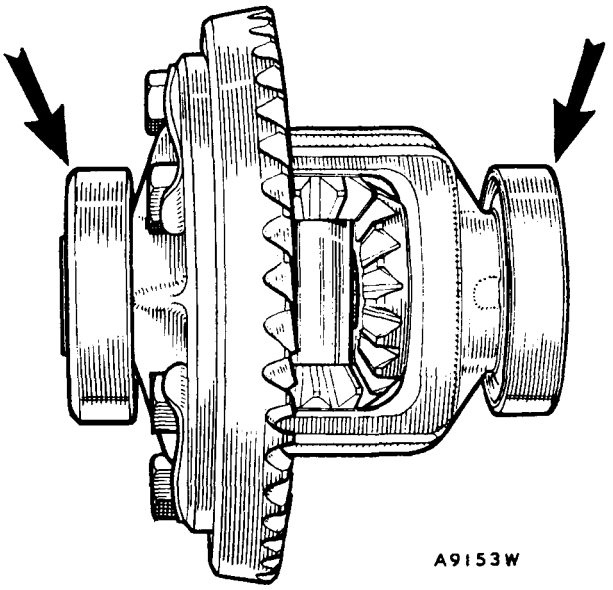

Fig. HH.6

Indicating the thrust faces of the differential bearings. The distance between these faces must be accurately measured on the first series of axles

Next, measure the distance from the outer face of one bearing to the outer face of the other assembled on the differential cage and add shims to make this dimension ·004 in. (·1 mm.) greater than that obtained for the housing. For example:

Variation marked on the carrier	+1 or ·001 in. (·025 mm.)
Distance between housings	5·336+·001 in. =5·337 in. (135·53+·025 mm. =135·55 mm.)
Distance measured over bearings	5·330 in. (135·38 mm.)
Difference	·007 in. (·17 mm.)
Shims required	·007 in.+preload ·004 in.=·011 in. (·17 mm.+preload ·1 mm.=·27 mm.)

These should be selected and assembled so that the shim thickness is approximately ·002 in. (·05 mm.) greater on the crown wheel side than on the other.

Shims are available in three sizes: these are ·002, ·004, and ·010 in. (·05, ·1, and ·25 mm.).

Fit the differential assembly to the gear carrier, replace the housing caps in their original positions, tighten the nuts to a torque wrench reading of 65 lb. ft. (8·99 kg. m.), and check the backlash between the pinion and crown wheel teeth. The correct backlash is etched on the rear face of the crown wheel (see paragraph (2) on page HH.10). If the backlash as shown by a suitably mounted dial indicator is incorrect move the crown wheel to the right or left as necessary by transferring shims from one side of the differential assembly to the other **without altering the total thickness of shimming.**

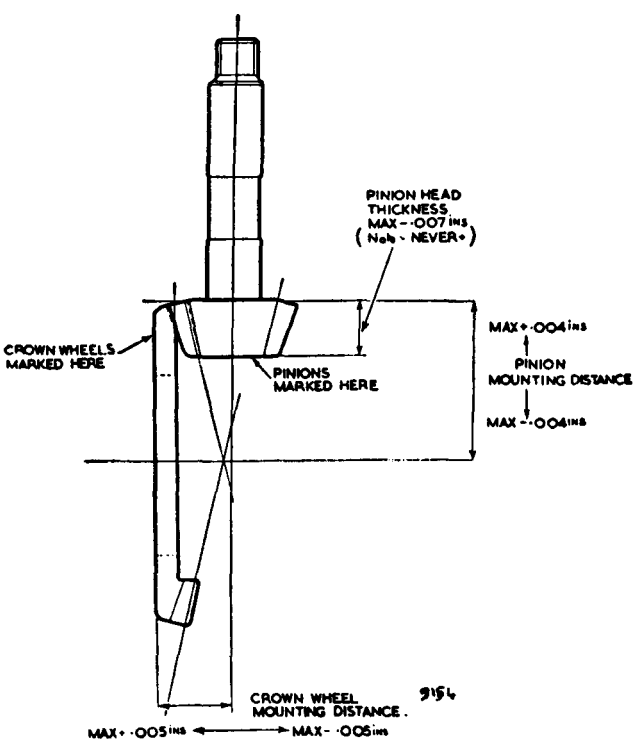

Fig. HH.7

Crown wheel and pinion markings

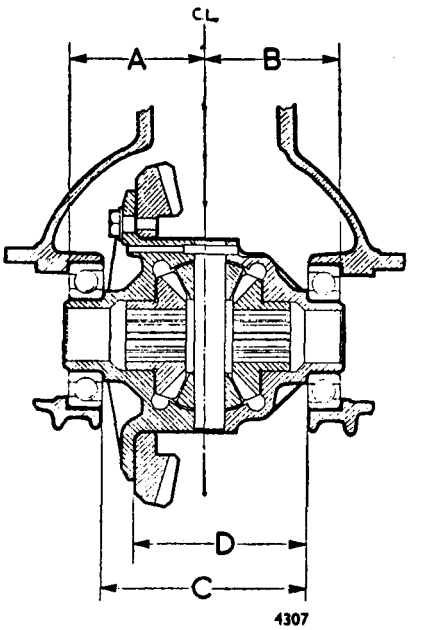

Fig. HH.8

Variations from the standard dimensions between the registers indicated are stamped on the differential carrier or cage of the second series of axles

Fit the gear carrier to the axle, using a new paper washer at the joint faces.

Connect the propeller shaft to the pinion driving flange.

Replace the axle shafts, drums, and wheels.

Refill with oil to Ref. B, page PP.2.

The second series of axles

(1) To assist in the calculations of the thickness of shims to be fitted behind each differential cage bearing variations are indicated by stamped numbers on the carrier adjacent to the bearing bores. The dimensions to be considered are shown in Fig. HH.8, (A) being the distance from the centre-line to the bearing register of the carrier on the left-hand side and (B) the distance from the centre-line to the bearing register of the carrier on the right-hand side. The (C) dimension is from the bearing register on one side of the cage

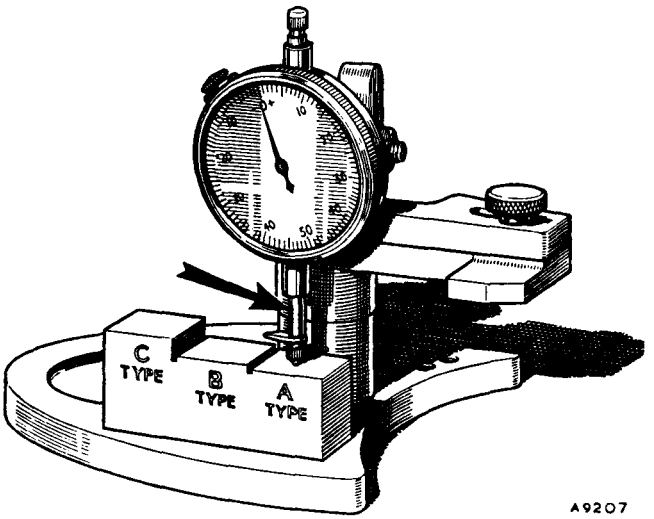

Fig. HH.9

When using Service tools 18G 191 *and* 18G 191 *A to measure variation of the bearing thickness zero the clock on the appropriate portion of the gauge block. The dial is here set for the 'A' type axle fitted to the Morris Minor*

to the register on the other side, while the (D) dimension is from the rear face of the crown wheel to the bearing register on the opposite side. Any variation on the (A) dimension will be found stamped on the carrier adjacent to the bearing bore, and similarly with the (B) dimension. Variations on the (C) and (D) dimensions are stamped on the machined face of the differential cage.

It is possible to calculate the shim thickness required on the left-hand side by the use of the following formula:

A+D−C+·002 in.

Substituting the actual variations shown, this formula gives the shim thickness required to compensate for the variations in machining plus the extra ·002 in. (·05 mm.) to give the necessary bearing pinch. In addition, allowance must be made for variations in bearing thickness in the following manner.

Rest the bearing, with the inner race over the recess and outer ring thrust face downwards, on the small surface plate (Service tool 18G 191 A). Drop the magnet on the surface plate and zero the clock gauge to the small gauge block on its step marked 'A' (see Fig. HH.9). (This is the thickness of the standard bearing.) Swing over the indicator until it rests on the plain surface of the inner race and, holding the inner race down against the balls, take a reading (Fig. HH.10). Normally the bearing will be standard to −·003 in., though in some cases tolerances may be from standard to −·005 in. A negative variation shown by this test indicates the additional thickness of shimming to be added to that side of the differential.

The formula for the right-hand side is:

B−D+·006 in.

and here again final allowance must be made for variation in bearing thickness.

(2) When a framed number is marked on the back of the crown wheel, e.g. +2, it must be taken into account before assembling the shims and bearings to the differential cage. This mark assists in relating the crown wheel with the pinion.

If, for example, the mark is +2, then shims to the value of ·002 in. (·05 mm.) must be transferred from the left-hand side (the crown wheel side) to the right-hand side. If the marking is −2, then shims to the value of ·002 in. (·05 mm.) must be moved from the right-hand side to the left-hand side.

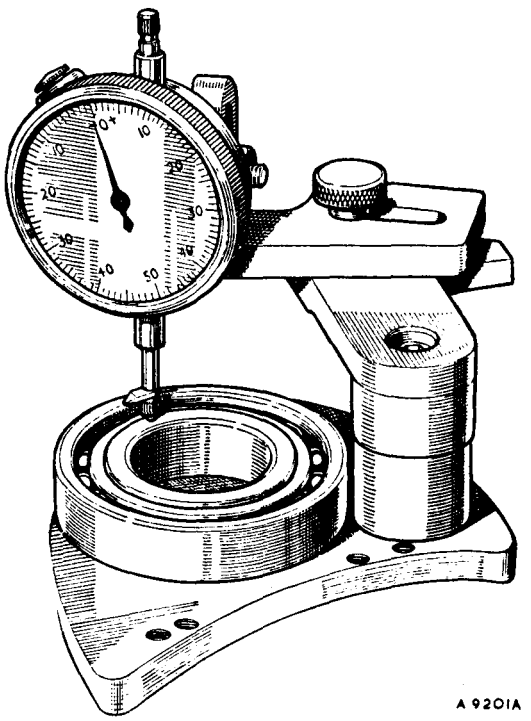

Fig. HH.10

With the indicator dial set to zero, place the bearing on the surface plate with the outer ring thrust face downwards and take the reading while the indicator foot registers with the inner race

4. ADJUSTING THE BACKLASH

(1) Assemble the bearings (thrust faces outwards) and shims as calculated to the differential cage.

Bolt the crown wheel to the differential cage but do not knock over the locking tabs. Tighten the bolts to a torque wrench reading of 60 lb. ft. (8·30 kg. m.).

Mount the assembly on two 'V' blocks and check the amount of run-out of the crown wheel, as it is rotated, by means of a suitably mounted dial indicator. The maximum permissible run-out is ·002 in. (·05 mm.) and any greater irregularity must be corrected. If there is excessive run-out detach the crown wheel and examine the joint faces on the flange of the differential cage and on the crown wheel for any particles of dirt.

When the parts are thoroughly cleaned it is unlikely that the crown wheel will not run true.

Tighten the bolts to the correct torque wrench reading and knock over the locking washers.

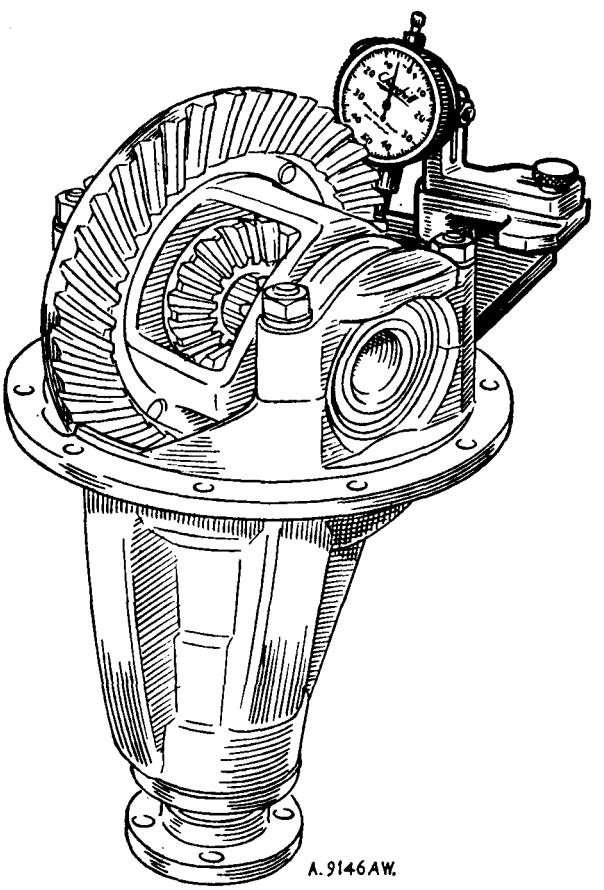

*Fig. HH.*11

Measuring the crown wheel backlash with Service tools 18*G* 191 *and* 18*G* 191 *A*

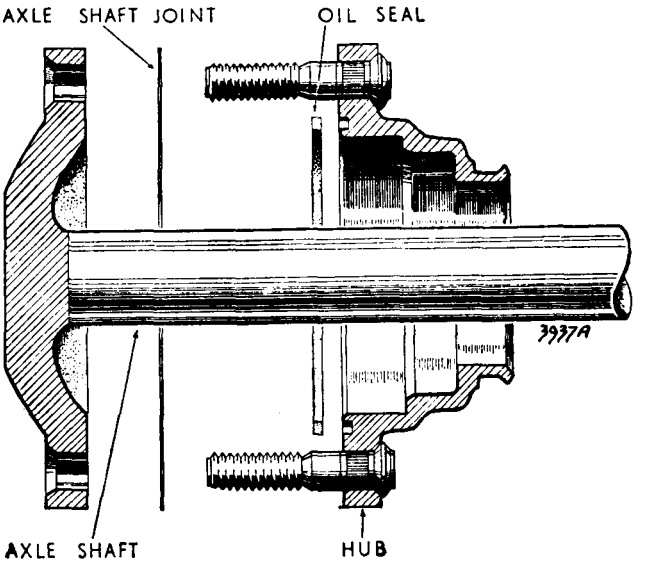

*Fig. HH.*12

The position of the additional rear hub oil seal fitted on later axles

(2) Fit the differential to the gear carrier. Replace the bearing caps and tighten the nuts to a torque wrench reading of 65 lb. ft. (8·99 kg. m.). Bolt the special tool surface plate to the gear carrier flange and mount the clock gauge on the magnet bracket in such a way that an accurate backlash figure may be obtained (see Fig. HH.11). The correct figure for the backlash to be used with any particular crown wheel and pinion is etched on the rear face of the crown wheel concerned and must be adhered to strictly.

NOTE.—To ensure adequate clearance when fitting a crown wheel and pinion to earlier axles it may be found necessary to use a pair of gears of which the crown wheel is unmarked.

(3) A movement of ·002 in. (·05 mm.) shim thickness from one side of the differential cage to the other will produce a variation in backlash of approximately ·002 in. (·05 mm.). Thus it should be possible to set up the differential, even though the backlash is incorrect, by removing the bearings on one occasion only.

Great care must be taken to ensure absolute cleanliness during the above operations, as any discrepancies resulting from dirty assembly would affect the setting position of the crown wheel or pinion.

Section HH.8

REMOVING AND REPLACING THE AXLE

Raise the rear of the car.

Remove the road wheels and release the hand brake.

Disconnect the flexible brake hose at the union on the under side of the car floor, taking care to use the correct locknut.

Disconnect the brake cable casings from their anchorages at the spring brackets by removing the nut and spring washer from each.

Disconnect the brake cables by removing the clevis pins securing the yokes to the brake-shoe actuating levers on the back-plates.

Support the axle on a stand or trolley jack.

Unscrew the 'U' bolt nuts and locknuts and remove the spring clamp and damper bracket plates.

Remove the split pin and nut and release the damper arms from the body.

Mark the propeller shaft coupling flanges and disconnect the shaft from the driving flange. Support the rear end of the propeller shaft.

Remove the rear shackle nuts and plates, and lower the rear ends of the springs to the ground.

Withdraw the axle from the car.

Reassembly is a reversal of the dismantling procedure, but it will be necessary to bleed the brakes to make sure that no air remains in the system.

Section HH.9

MODIFIED REAR AXLE HUB BEARING NUTS

From Car No. 376869 the left-hand hub bearing nut on the axle has a left-hand thread (turn clockwise to unscrew). The right-hand nut remains unchanged with a right-hand thread. This modification is also introduced on the Traveller at Car No. 370228.

Section HH.10

REAR HUB OIL SEAL

On the rear axles fitted to later cars a modified rear hub with an additional oil seal is introduced. The hub assembly has a groove machined in the face and a rubber oil sealing ring is fitted in the groove between the hub and the axle shaft to hub joint (see Fig. HH.12).

The oil seal may only be fitted to earlier cars together with the later-type hub.

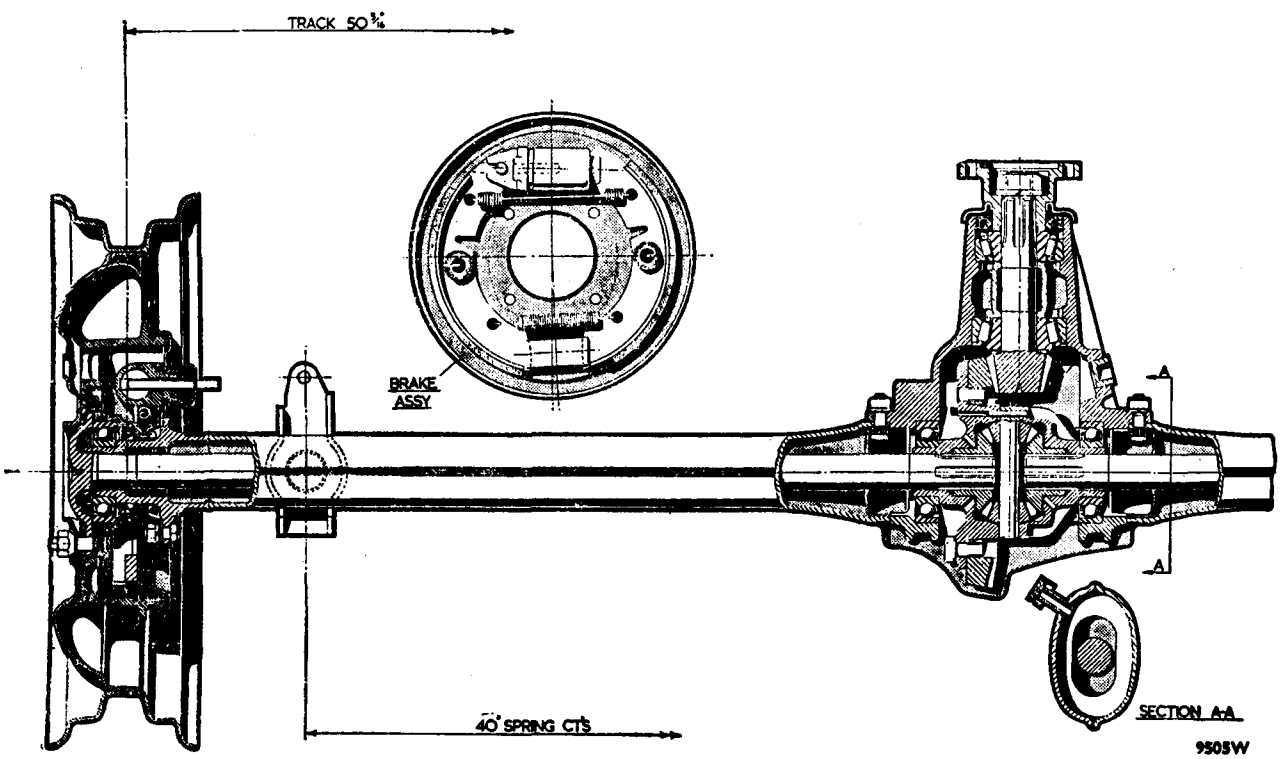

Fig. HH.13

The Morris Minor three-quarter-floating rear axle

SECTION I

THE REAR ROAD SPRINGS

THE SHOCK ABSORBER, RADIATOR, EXHAUST SYSTEM, PETROL SYSTEM, AND REAR SPRING COMPONENTS

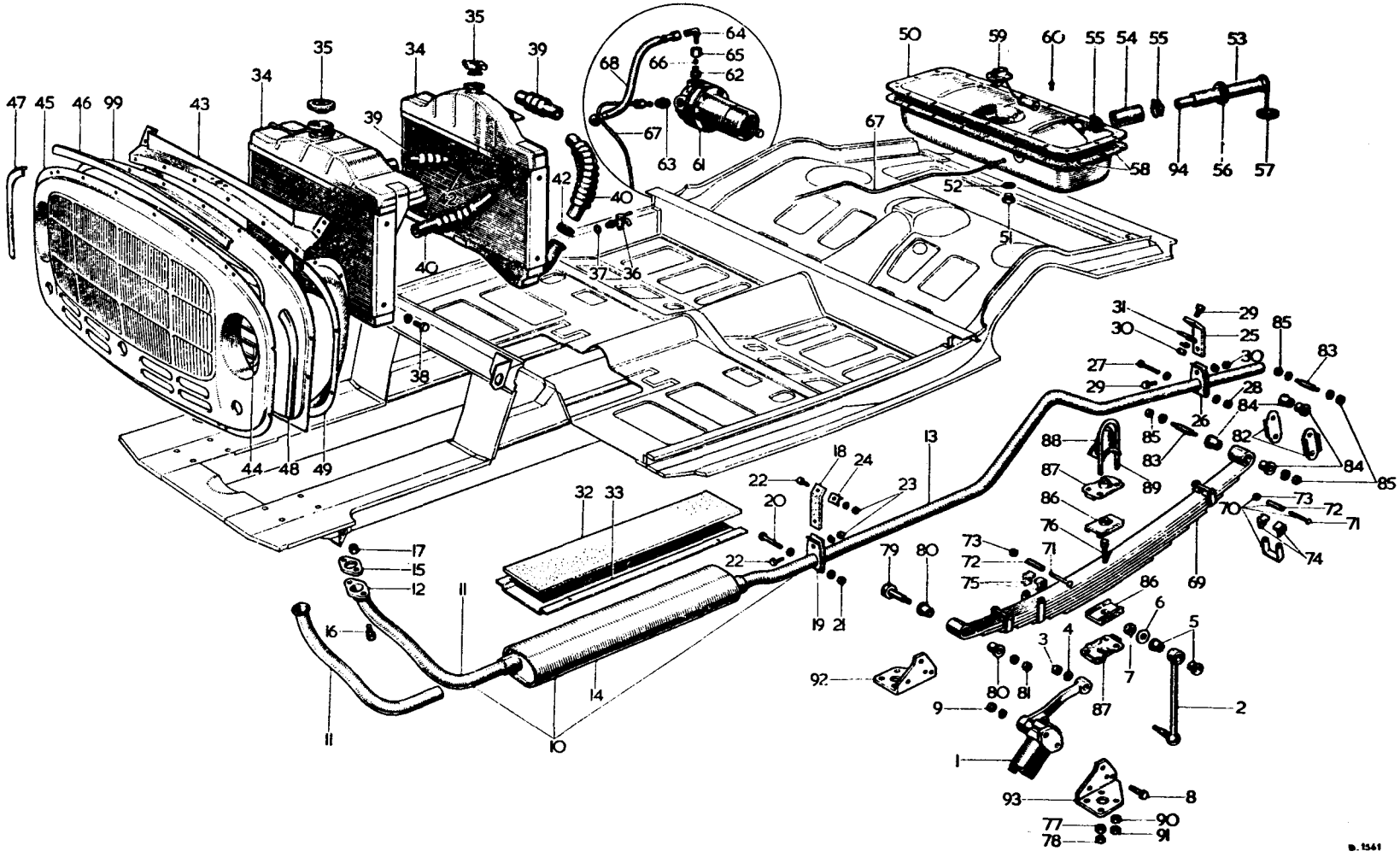

KEY TO THE SHOCK ABSORBER, RADIATOR, EXHAUST SYSTEM, PETROL SYSTEM, AND REAR SPRING COMPONENTS

No.	*Description*
1.	Rear shock absorber—R.H. and L.H.
2.	Link—shock absorber to body.
3.	Nut—link to absorber.
4.	Washer—link to absorber.
5.	Bush—link to body.
6.	Washer—link to body.
7.	Nut—link to body.
8.	Bolt—absorber to bracket.
9.	Nut—absorber to bracket bolt.
10.	Exhaust assembly.
11.	Front pipe—exhaust.
12.	Flange—front exhaust pipe.
13.	Rear pipe—exhaust.
14.	Silencer assembly.
15.	Gasket—front pipe flange to manifold.
16.	Bolt—front pipe flange to manifold.
17.	Nut—pipe flange bolt.
18.	Insulator—front support.
19.	Clip—front support.
20.	Pinch bolt—front support clip.
21.	Nut—pinch bolt.
22.	Bolt—insulator to floor and clip.
23.	Nut—insulator bolt.
24.	Washer—insulator to floor.
25.	Insulator—rear support.
26.	Clip—rear support.
27.	Pinch bolt—rear support clip.
28.	Nut—pinch bolt.
29.	Bolt—insulator to floor and clip.
30.	Nut—insulator bolt.
31.	Washer—insulator to floor.
32.	Insulator—floor.
33.	Retaining plate—floor insulator.
34.	Radiator.
35.	Radiator filler cap.
36.	Drain tap—radiator.
37.	Washer—radiator drain tap.
38.	Bolt—radiator to cowl.
39.	Hose—top.
40.	Hose—bottom.
42.	Clip—hose.
43.	Cowl assembly.
44.	Grille.
45.	Panel—grille.
46.	Surround—grille—centre.
47.	Surround—grille—R.H.
48.	Surround—grille—L.H.
49.	Cover-plate—front side panel—R.H. and L.H.
50.	Petrol tank.
51.	Drain plug—petrol tank.
52.	Washer—drain plug.
53.	Filler neck—tank.
54.	Hose—filler neck.
55.	Clip—filler neck hose.
56.	Ferrule—filler neck.
57.	Cap—petrol tank filler.
58.	Seal—tank fixing flange.
59.	Tank unit—petrol gauge.
60.	Screw—tank flange to floor.
61.	Petrol pump assembly.
62.	Union—carburetter pipe.
63.	Union—tank pipe.
64.	Elbow—pump delivery.
65.	Nut—pump delivery elbow.
66.	Olive—pump delivery elbow.
67.	Pipe—petrol tank to pump.
68.	Pipe—flexible—pump to carburetter.
69.	Rear spring assembly.
70.	Clip—assembly—spring leaf.
71.	Bolt—leaf clip.
72.	Tube—leaf clip.
73.	Nut—leaf clip bolt.
74.	Rubber—leaf clip—small.
75.	Rubber—leaf clip—large.
76.	Dowel bolt.
77.	Nut—dowel bolt.
78.	Locknut—dowel bolt.
79.	Pin—spring—front anchorage.
80.	Bush—rubber—front anchorage pin.
81.	Nut—front anchorage pin.
82.	Shackle plate—spring—rear.
83.	Pin—spring shackle.
84.	Bush—spring shackle pin.
85.	Nut—spring shackle pin.
86.	Seating pad—rubber.
87.	Locating plate.
88.	Buffer—rebound.
89.	Bolt—anchor—spring.
90.	Nut—anchor bolt.
91.	Locknut—anchor bolt.
92.	Bracket—shock absorber—R.H.
93.	Bracket—shock absorber—L.H.
94.	Insert—filler neck.
99.	Grille and panel.

GENERAL DESCRIPTION

The semi-elliptic leaf springs provided for rear suspension are secured beneath the rear axle by 'U' bolts.

The front ends of the springs are anchored in flexing rubber bushes, while the rear ends are mounted in similar bushes in swinging shackles.

Moulded rubber packing pads are inserted between the leaves and the spring clips. It is essential that no lubricant be used on the spring leaves or shackles.

The spring action is controlled by hydraulic dampers of the piston type (Section L).

Section I.1

REMOVAL AND REPLACEMENT OF THE REAR SPRINGS

Raise the rear of the car by means of a suitable sling attached to the bumper brackets and place a support beneath the axle casing.

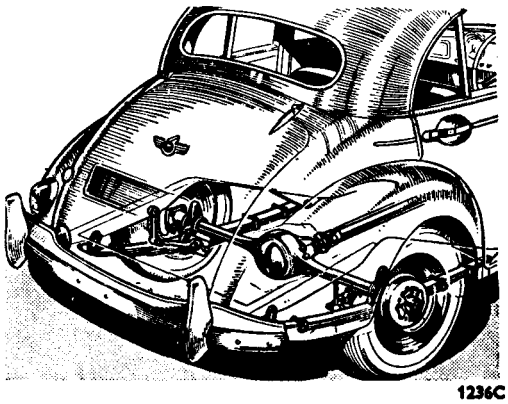

Fig. I.1

The rear springs are of the semi-elliptic type

Slacken off the 'U' bolt locknuts and remove the nuts. Raise the 'U' bolts until the shock absorbers and brackets can be pivoted clear of the springs. Remove the plate and rubber pad.

Remove the rear shackle nuts and plates.

Undo the $\frac{5}{16}$ in. nut from the spring front anchorage bolt. The bolt has pin spanner holes in its head to permit it to be held against rotation while loosening or tightening up the nut.

The spring is now free to be removed.

Replacement of the spring is a reversal of the above procedure, but before replacing the shackle bolts, bushes, and plates they must be inspected for wear and, if necessary, replaced by new components. Ensure that the rubber pads are positioned correctly and that the head of the spring centre bolt registers with the spring bracket on the axle case.

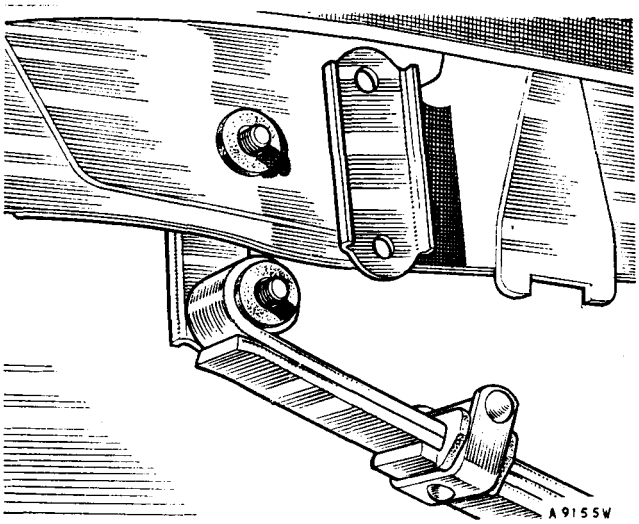

Fig. I.2

The shackle plates withdrawn, showing the flexing rubber bearing bushes

The spring must be replaced with two spring clips forward of the axle, and the front anchorage bolt has to be inserted from the inner side of the bracket.

Before tightening the spring bolts it is essential that the normal working load be applied to the springs so that the flexing rubber bushes are deflected to an equal extent in both directions during service. Failure to take this precaution will inevitably lead to early deterioration of the bushes.

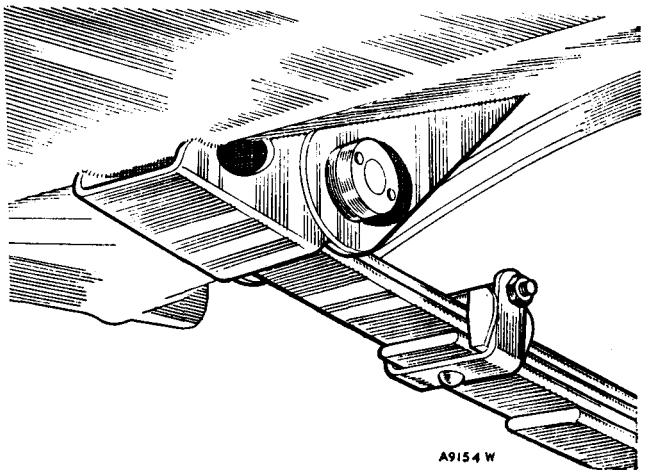

Fig. I.3

The anchorage pin for the rear spring is provided with holes in its head whereby it may be held against rotation while the nut is screwed or unscrewed. Later models have a modified bracket with a renewable seating for the bolt

Section I.2

DISMANTLING AND REASSEMBLING THE SPRINGS

Slacken off and remove the three spring clip bolts, distance pieces, and rubber packings.

Release the locknut and nut from the spring centre bolt and remove the distance piece and bolt.

The leaves may now be separated.

Inspection

Clean each leaf thoroughly and examine for cracks or breakages. Check the centre bolt for wear or distortion (this bolt forms the location for the spring on its axle pad and should be in good condition).

IMPORTANT.—When fitting new leaves it is important that they are of the correct length and thickness and have the same curvature as the remaining leaves.

It is advisable, even when no leaves are broken, to fit replacement springs when the originals have lost their camber due to settling.

Reassembling

Place the leaves together in their correct order, locating them with the centre bolt.

The dowel head of the bolt must be on top of the spring.

Fit No. 5 leaf with its clip on the forward side of the centre dowel bolt.

Replace the spring clip rubber packings, clip distance pieces, and bolts.

NOTE.—On later models the rear spring front brackets are fitted with detachable and renewable bush plates Part No. ACA 5271, commencing at Car No. 17840 (Home) and Car No. 8700 (Export).

SECTION J

THE STEERING GEAR

THE MORRIS MINOR (Series MM and Series II)
STEERING GEAR COMPONENTS

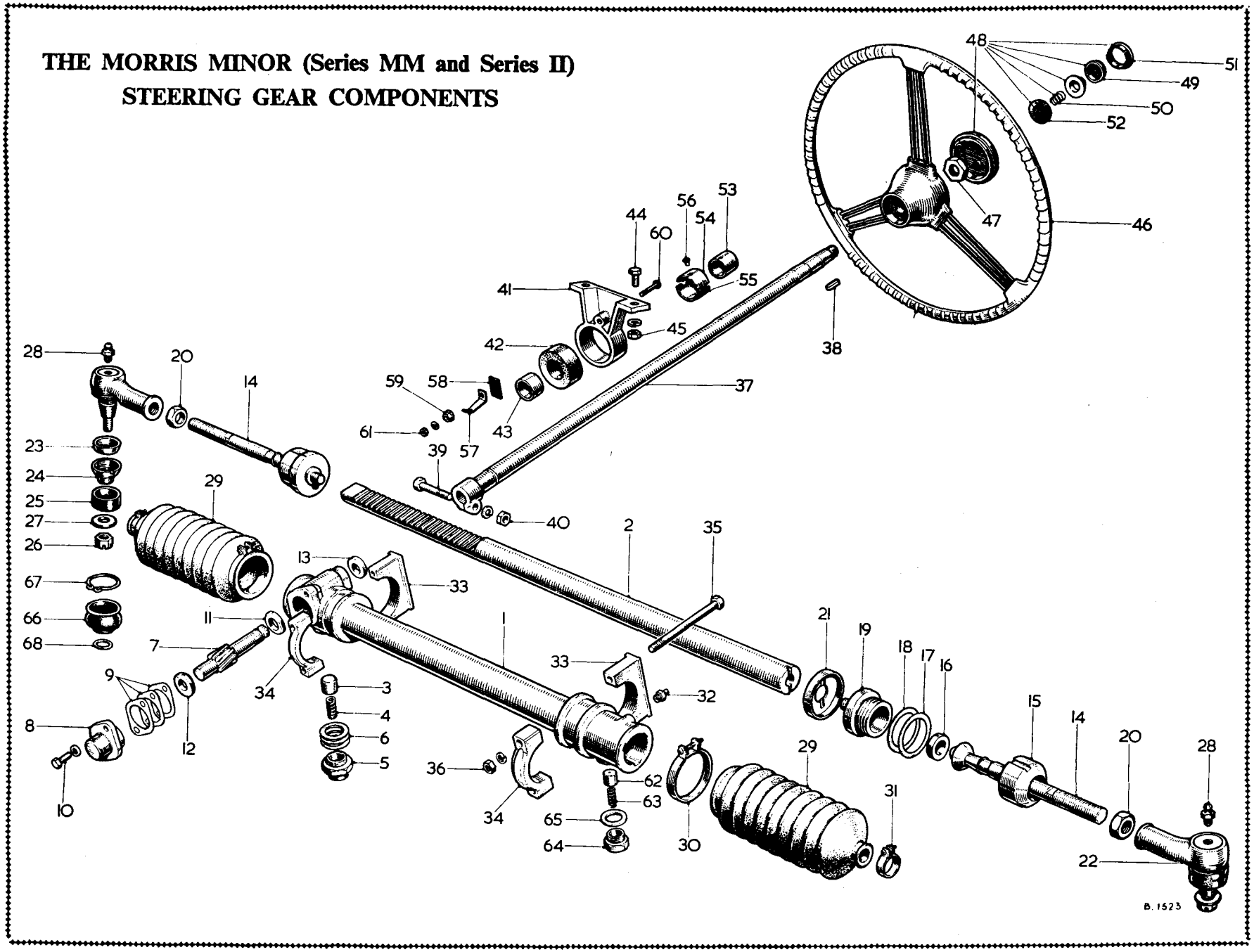

KEY TO THE MORRIS MINOR (Series MM and Series II)
STEERING GEAR COMPONENTS

No.	Description
1.	Rack housing.
2.	Rack.
3.	Damper pad—rack.
4.	Spring—rack damper pad.
5.	Housing—rack damper pad.
6.	Shim—rack damper housing.
7.	Pinion—steering.
8.	Tail bearing—pinion.
9.	Shim—tail bearing—·003 in. (·08 mm.) and ·005 in. (·13 mm.).
10.	Bolt—bearing to rack housing.
11.	Thrust washer—top—pinion.
12.	Thrust washer—bottom—pinion.
13.	Seal—pinion.
14.	Tie-rod.
15.	Ball housing—female.
16.	Ball seat.
17.	Shim—ball seat—·003 in. (·08 mm.).
18.	Shim—ball seat—·005 in. (·13 mm.).
19.	Ball housing—male.
20.	Locknut—ball socket.
21.	Lock washer—ball housing—male.
22.	Ball socket assembly.
23.	Cap—inner—grease-retaining.
24.	Cap—outer—grease-retaining.
25.	Pressure ring—cap.
26.	Nut—slotted.
27.	Washer.
28.	Greaser—ball socket.
29.	Seal—rack to tie-rod.
30.	Clip—seal to rack housing.
31.	Clip—seal to tie-rod.
32.	Greaser—rack.
33.	Base—clamp—rack to toeboard.
34.	Cap—clamp—rack to toeboard.
35.	Bolt—clamp to toeboard.
36.	Nut—clamp to toeboard bolt.
37.	Column assembly.
38.	Key—steering-wheel to column.
39.	Bolt—column to pinion.
40.	Nut—column to pinion bolt.
41.	Support bracket—column.
42.	Sleeve—rubber.
43.	Bush.
44.	Bolt—support bracket to fascia.
45.	Nut—support bracket bolt.
46.	Steering-wheel.
47.	Nut—steering-wheel to column.
48.	Horn-push assembly.
49.	Button—horn-push.
50.	Spring—horn-push.
51.	Retainer—horn-push button.
52.	Contact base—horn-push.
53.	Slip-ring.
54.	Block—slip-ring—upper.
55.	Block—slip-ring—lower.
56.	Thimble—slip-ring.
57	Contact brush—slip-ring.
58.	Insulator—slip-ring.
59.	Sleeve—contact brush.
60.	Bolt—contact to column bracket.
61.	Nut—contact bolt.
62.	Pad—secondary damper.
63.	Spring—secondary damper pad.
64.	Housing—secondary damper pad.
65.	Washer—housing.
66.	Boot—rubber.
67.	Clip—boot.
68.	Clip ring—boot.

NOTE.—Later models are fitted with an improved tie-rod assembly (Part No. 183379) which may be fitted to the original type of rack (Part No. 133254) by machining a counterbore in place of the countersink as indicated in the illustrations below.

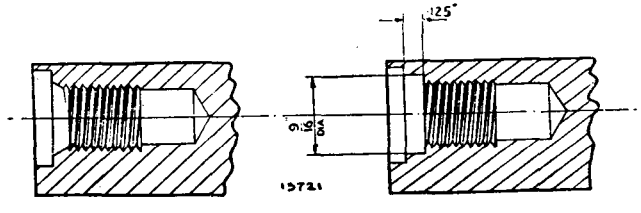

Original countersink *New counterbore*

GENERAL DESCRIPTION

The rack and pinion type steering gear is secured to the engine bulkhead immediately above the clutch housing. Tie-rods, operating the steering-arms, are attached to each end of the steering-rack by ball joints enclosed in rubber gaiters.

The steering-column engages the splined end of a helical-toothed pinion to which it is secured by a clamp bolt.

End-play of the pinion is eliminated by adjustment of the shims fitted beneath the pinion tail end bearing. A damper pad inserted beneath the steering-rack controls the backlash between the pinion and rack.

MAINTENANCE

A nipple provided at the left-hand end of the rack housing is accessible when the front carpet has been turned back. This nipple should be used to replenish the rack housing with Hypoid oil to Ref. B (page P.2) at the specified intervals. Avoid overfilling the steering gearbox, and keep the clips on the rubber gaiters fully tightened to prevent the oil escaping. No more than 10 strokes of a hand-type oil gun may be given.

Apply a grease gun, filled with grease to Ref. D (page P.2), to the nipple on each tie-rod ball joint at the specified intervals.

Section J.1

REMOVAL AND REPLACEMENT OF THE STEERING-WHEEL

Withdraw the connector from the negative battery terminal.

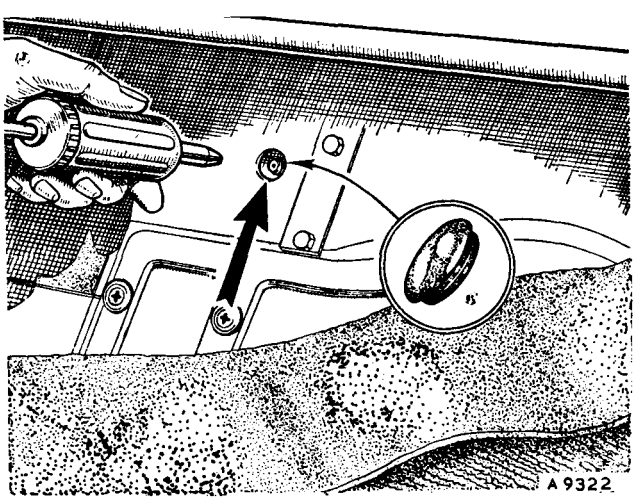

Fig. J.1

The location of the nipple for replenishing the steering gearbox with lubricant

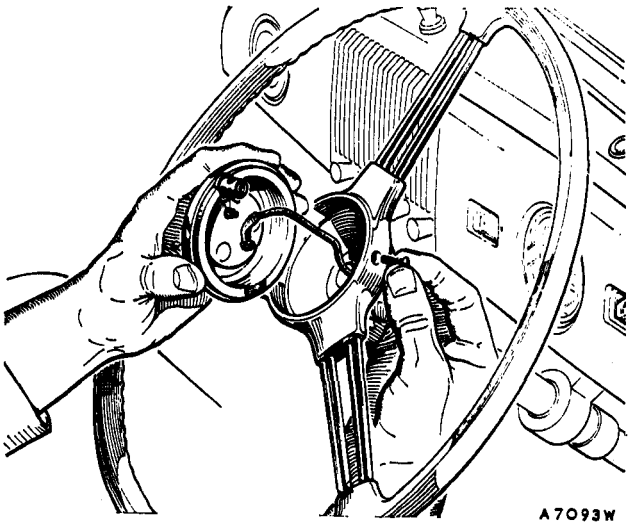

Fig. J.2

The horn wire is released by withdrawing the terminal screw in the wheel hub

Extract the chromium-plated screw from the bowl of the steering-wheel, lift out the horn-push assembly, and disconnect the horn wire.

Remove the steering-wheel retaining nut, using a $\frac{7}{8}$ in. box spanner. The steering-wheel can then be withdrawn with the aid of the steering-wheel extractor (Service tool 18G 310) (see Fig. J.3).

Reassembly is a reversal of the above procedure, but ensure that the steering-wheel locknut and the horn connections are fully tightened.

Section J.2

REMOVAL AND REPLACEMENT OF THE STEERING-COLUMN ASSEMBLY

Remove the connector from the negative battery terminal.

Disconnect the horn wire from the slip-ring contact brush terminal.

Remove the clamp nut and bolt from the splined lower end of the steering-column and slacken the two bolts securing the column bracket beneath the fascia panel.

Disengage the column assembly from the pinion shaft splines and lift from the car.

The method of replacing the steering-column assembly is a reversal of the above instructions, but it is essential that the splines on the steering-column and the pinion are engaged correctly. The slot in the steering-column

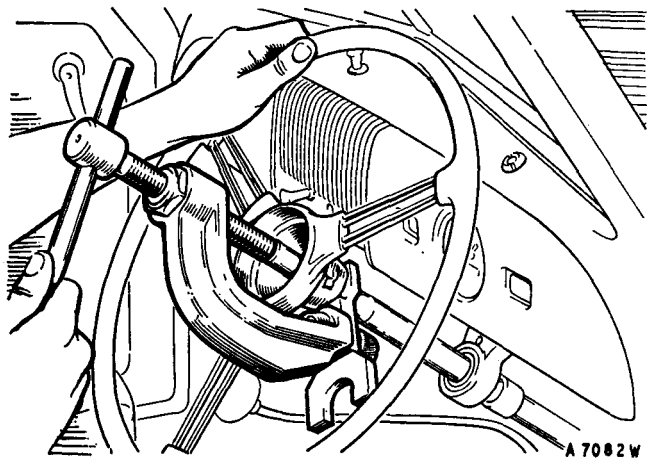

Fig. J.3

The special extractor, Part No. 18G 310, *in position for the withdrawal of the steering-wheel*

clamp must coincide with the mark on the end of the pinion. The mark is at bottom dead centre when the wheels are in their straight-ahead position.

Section J.3

REMOVAL AND REPLACEMENT OF THE STEERING-RACK ASSEMBLY

Remove the steering-column assembly as detailed in Section J.2.

Remove the split pins and slacken the ⅜ in. slotted nut on each tie-rod ball joint. **Do not remove the nut.** Tap the circumference of the steering-arm eye sharply and then place a support above the arm and drive the taper pin from its seating. The securing nut may now be removed and the tie-rod lifted from the arm. Note the position of the rubber washer.

Remove the front carpet and floorboard.

Extract the four ¼ in. bolts and spring washers and nuts securing the rack housing to the engine bulkhead and remove the brackets. The housing may now be withdrawn.

There will be no difficulty in replacing the steering-rack assembly provided the above instructions are carried out in the reverse order.

Section J.4

DISMANTLING THE STEERING GEAR

Unlock the ball end retaining nuts on the steering tie-rods and remove the ball end assemblies.

Release the gaiter clips from the rack housing and tie-rods and remove the rubber gaiters.

Unscrew the damper pad housing from the rack housing and withdraw it complete with pad, spring, and shims. Care must be taken not to lose any of the shims.

Extract the two bolts securing the pinion shaft tail bearing and remove the bearing and shims. Withdraw the pinion complete with the top thrust washer. The bottom thrust washer is trapped behind the rack teeth.

Secure the rack housing between suitable clamps in a vice and tap back the washers locking the tie-rod ball housings. Unscrew the ball joint caps with Service tool 18G 313 and remove the lock washers.

The steering-rack assembly may now be withdrawn from the housing.

Unscrew the ball seat housing from the ball joint caps with Service tool 18G 312.

The shims and ball seats are now free to fall out.

Section J.5

EXAMINING PARTS FOR WEAR

Thoroughly clean and examine for wear all parts of the pinion housing, shaft, and teeth. If badly worn, the pinion or housing, or both, should be renewed.

Fractures or hollows, or any roughness in the surfaces of the teeth, will render the rack or pinion unserviceable.

Clean off and examine the rubber gaiters. If they are damaged new ones **must** be fitted. Remove the nipple from the rack housing and the two on the ball joints. Check them by forcing lubricant through them to ensure that they are not blocked.

If the tie-rod inner ball housings or seats are badly worn they must be renewed and then adjusted as detailed in Section J.6. The outer ball joint is not adjustable and if worn must be replaced by a new assembly.

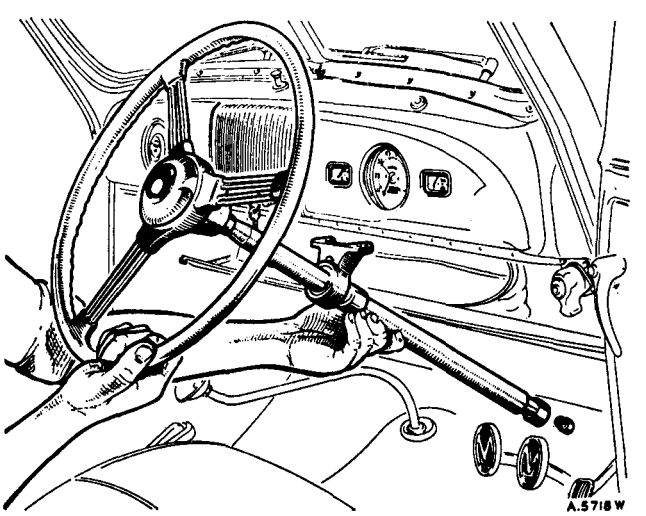

Fig. J.4

Withdrawing the steering-column assembly

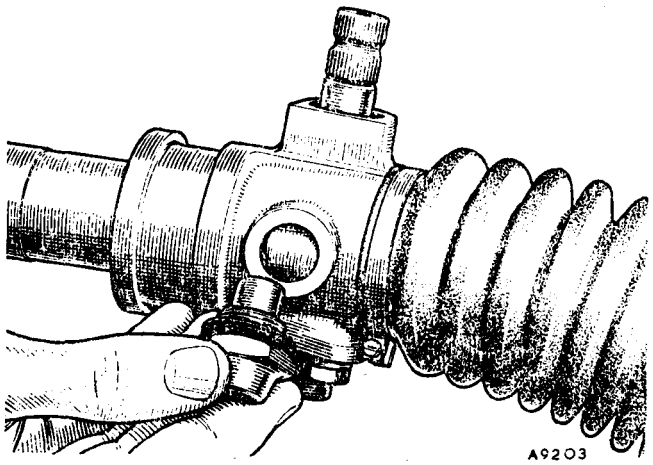

Fig. J.5

The steering-rack damper removed to show its construction and adjustment shims

Section J.6

REASSEMBLING THE STEERING GEAR

Fit a new lock washer to one end of the steering-rack, then replace and tighten the ball seat housing. Replace the shims and ball seat and, after inserting the ball end of the tie-rod, screw up the ball housing until it is right home. The ball must be a reasonably tight sliding fit without play. Adjustment is carried out by varying the thickness of the shims beneath the ball joint cap seating. The shims are provided in thicknesses of ·002 in., ·003 in., and ·005 in. (·05 mm., ·08 mm., and ·13 mm.). When correctly adjusted the ball housing must be locked in two places by the flange of the lock washer.

Insert the rack into its housing and refit and adjust the other ball seat in a similar manner.

Draw the rack through its housing until the middle tooth (No. 12 from either end) is in the centre of the pinion housing.

Place the thickest of the pinion thrust washers in position in the rack housing with its chamfered edge towards the rack. Replace the smaller thrust washer on the plain end of the pinion shaft with the chamfered edge towards the pinion teeth.

Replace the pinion, engaging the trough between two teeth, which is in line with the mark on the splined end of the pinion shaft, with the centre tooth of the rack. The correct engagement of the rack and pinion is essential if the steering-wheel position is not to be affected.

Replace the shims and the pinion tail bearing. Bolt them into position and check the end-play of the pinion shaft, which should be between ·002 and ·005 in. (·05 and ·13 mm.). If necessary, the shims must be adjusted to give this degree of play.

Check that both the rods are of equal length by measuring the distance from the spanner flats to the ball joint locknuts.

Refit the rubber gaiters and clips

Replace the ball end locknuts and joint assemblies in their approximate original positions.

To adjust the rack damper the plunger must be replaced in the cap and screwed into position without the plunger spring or shims until it is just possible to rotate the pinion shaft by drawing the rack through its housing. A feeler gauge is then used to measure the clearance between the hexagon of the plunger cap and its seating on the rack housing. To this figure must be added an additional clearance of ·002 to ·005 in. (·05 to ·13 mm.) to arrive at the correct thickness of shims which must be placed beneath the damper cap. The shims are ·003 in. (·08 mm.) thick.

Remove the damper cap and plunger. Insert the spring beneath the plunger and replace and tighten the assembly with the requisite number of ·003 in. (·08 mm.) shims as defined in the previous paragraph.

Fit a new pinion shaft felt seal, and pump approximately ½ pint (·6 U.S. pint, ·28 litre) of Hypoid oil to Ref. B (page P.2) into the rack housing through the nipple provided.

Section J.7

CHECKING AND SETTING WHEEL ALIGNMENT

When correctly adjusted the front wheels should toe in towards each other to the extent of $\frac{3}{32}$ in. (2·5 mm.). To carry out any necessary adjustment first inflate the

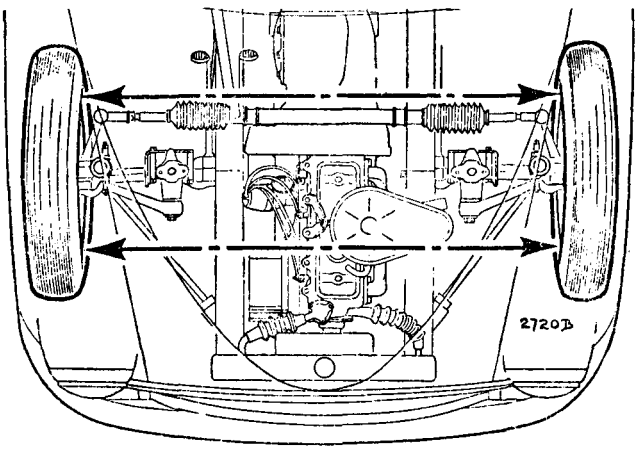

Fig. J.6

The alignment of the front wheels should be such that they toe in towards each other to the extent of $\frac{3}{32}$ in. (2·5 mm.) when in the straight-ahead position

tyres to the standard pressure of 22 lb./sq. in. (1·6 kg./cm.²).

Turn the wheels to their straight-ahead position and position the pointers of a set of alignment trammels to the wheel centre height, or make use of an alignment fixture if one is available.

Place the trammel at the front of the front wheels and adjust it longitudinally so that both pointers register against the inside rim of each wheel. Mark the position of the pointers on each wheel rim with chalk, withdraw the trammel, and push the car forward so that the wheels make exactly half a revolution.

Move the trammel to the rear of the wheels so that one pointer registers with the chalk-mark on one of the wheels. For the alignment to be correct the other pointer should be $\frac{3}{32}$ in. (2·5 mm.) from the rim of the other wheel.

Should it not be so, adjust the track by slackening the locknut of both tie-rod ball joints and the clips securing the rubber gaiters to the tie-rods, then rotate each tie-rod equally in the necessary direction. Both tie-rods have right-hand threads and should be rotated with a spanner applied to the flats provided.

When making adjustments remember that they are doubled, that is to say, that adjustment of the rim in one direction makes a similar increase of the opposite portion of the rim in the other direction.

Whenever possible, one of the special alignment devices now on the market should be employed to set the front wheels.

IMPORTANT.—Make sure to retighten the locknuts and rubber gaiter clips and particularly that the top surfaces of the ball joints are in the same plane.

When the track is correctly adjusted and the wheels are in the straight-ahead position the slot in the steering-column clamp must be at the bottom dead centre position and the tie-rods adjusted to equal lengths. This can be checked by measuring the distance from the spanner flats to the ball joint locknuts.

Section J.8

MODIFICATION

It should be noted that cars subsequent to No. SMM/29862 (Home) and SMM/11958 (Export) are fitted with steering levers having a taper of larger dimensions and retained with a $\frac{1}{2}$ in. B.S.F. nut in place of the $\frac{7}{16}$ in. B.S.F. nut originally fitted.

Section J.9

RUBBER SEAL STEERING JOINTS

On later cars a modified ball socket assembly (Part No. 185163) is fitted. The later type differs from the older type in that it has a rubber shroud secured by a clip at either end to retain the socket grease and act as a dirt excluder. On the earlier type these functions are performed by two metal cups and a washer.

Section J.10

ELIMINATING STEERING-RACK RATTLE

In cases where steering-rack rattle has developed due to the clearance between the rack and its housing increasing in use to an extent beyond normal it is an advantage to fit an additional damping pad at the support end of the rack housing.

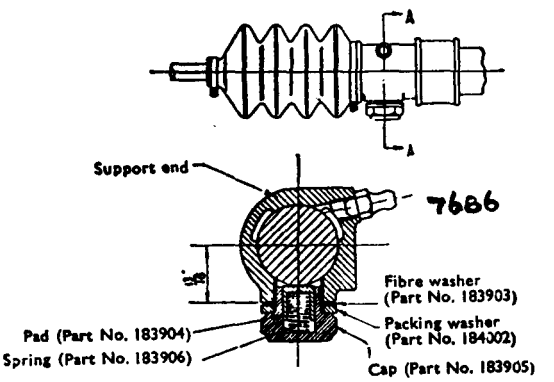

Fig. J.7

The assembly of the additional damper on the steering-rack housing

To do this, first remove the steering-rack assembly from the vehicle and dismantle the rack from its housing.

Drill the blank boss at the support end of the rack housing $\frac{39}{64}$ in. (15·5 mm.) and tap $\frac{11}{16}$ in. × 18 t.p.i. (Whitworth form). Face down the boss, square with the thread, to $\frac{13}{16}$ in. (20·6 mm.) from the centre of the rack housing.

Reassemble the rack in the housing and fit a pressure pad (Part No. 183904), spring (Part No. 183906), fibre washer (Part No. 183903), packing washer (Part No. 184002), and cap (Part No. 183905) as shown in Fig. J.7.

Section J.11

MODIFIED STEERING BALL SOCKETS

From Car No. 246771 onwards it should be noted that modified steering ball sockets (new Part No. ACA 6001) are fitted having $\frac{7}{16}$ in. UNF. tapered studs and $\frac{5}{16}$ in. UNF. straight greaser nipples (Part No. UHN 105). The thread on the tie-rod end remains B.S.F., however.

SECTION JJ

THE STEERING GEAR
OF THE MORRIS MINOR 1000

THE MORRIS MINOR 1000
STEERING-COLUMN ASSEMBLY (Earlier Models)

No.	*Description*
1.	Column—steering.
2.	Tube assembly—outer.
3.	Bush—felt.
4.	Bracket—column support.
5.	Clamp—bracket.
6.	Packing strip—clamp.
7.	Screw—clamp.
8.	Nut—clamp screw.
9.	Spring washer—screw.
10.	Wheel—steering.
11.	Nut—wheel.

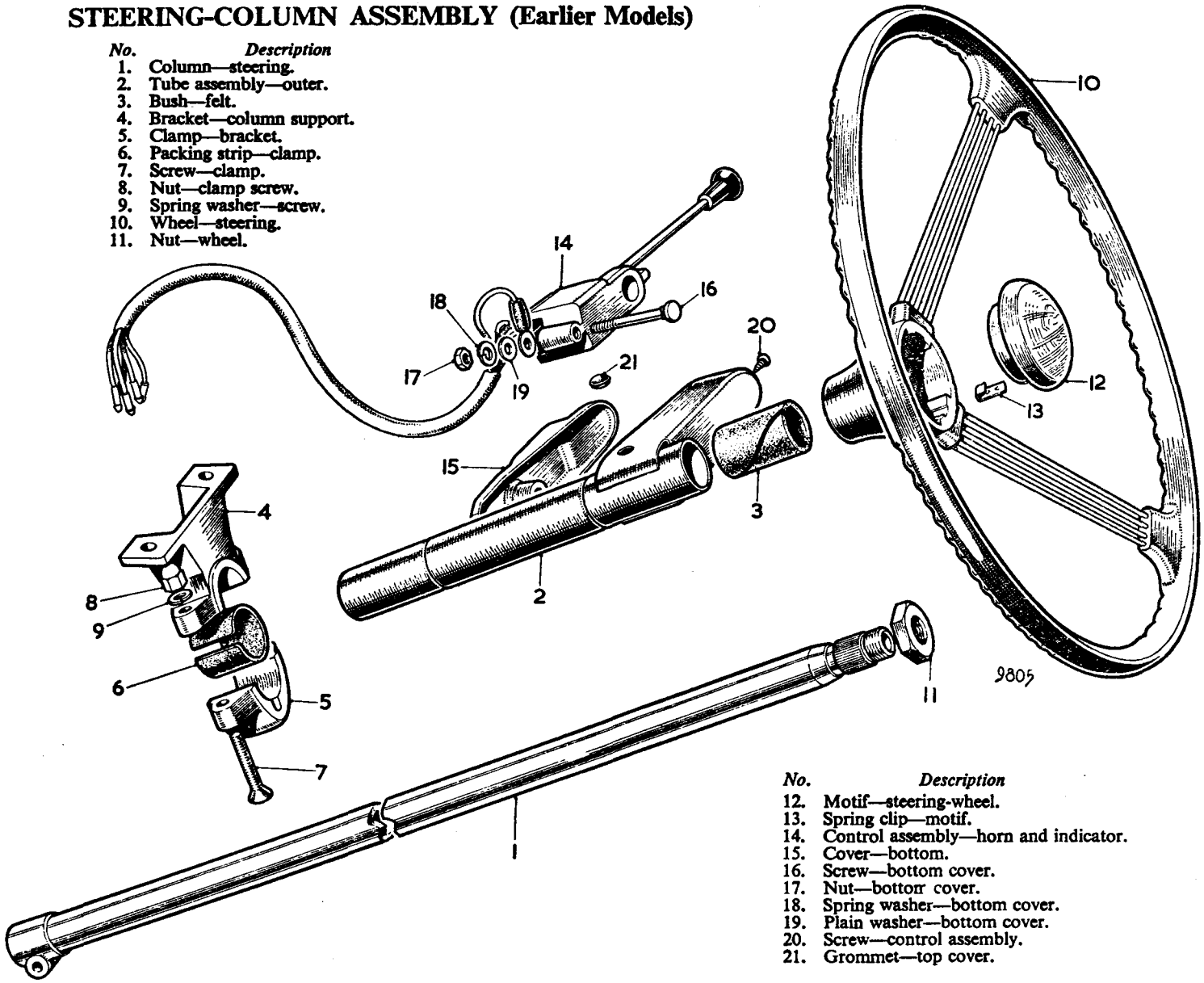

No.	*Description*
12.	Motif—steering-wheel.
13.	Spring clip—motif.
14.	Control assembly—horn and indicator.
15.	Cover—bottom.
16.	Screw—bottom cover.
17.	Nut—bottom cover.
18.	Spring washer—bottom cover.
19.	Plain washer—bottom cover.
20.	Screw—control assembly.
21.	Grommet—top cover.

GENERAL DESCRIPTION

The rack and pinion steering fitted to the Morris Minor 1000 is the same as that fitted to the Morris Minor (Series II), with the exception of the steering-column assembly. The instructions for servicing are given in Section J with Section JJ.1 replacing Sections J.1 and J.2.

Section JJ.1

REMOVAL AND REPLACEMENT OF THE STEERING-COLUMN ASSEMBLY

Disconnect the positive battery terminal.

Prise off the steering-wheel motif: this is retained by three spring clips. Remove the steering-wheel retaining nut and withdraw the steering-wheel with the steering-wheel extractor, Service tool 18G 310.

Disconnect the five trafficator and horn control wires from the snap connectors beneath the fascia. Remove the screw from the end of the trafficator and horn control assembly and the nut, spring washer, flat washer, and earth wire terminal from the bottom cover bolt and withdraw the bolt, thus releasing the control assembly from the steering-column. Release the control cable from the steering-column bracket clamp.

Remove the clamp nut and bolt from the bottom of the steering-column and the two cap nuts and screws from the column support bracket and clamp beneath the fascia, and remove the clamp.

Disengage the column assembly from the pinion splines and lift from the car.

The method of replacing the steering assembly is a reversal of the above instructions, but the slot in the steering-column clamp **must** coincide with the mark on the end of the pinion. The mark is at bottom dead centre when the wheels are in their straight-ahead position.

Section JJ.2

MODIFIED STEERING-COLUMN ASSEMBLY

Later cars are fitted with a modified steering-column assembly having the horn-push mounted in the centre of the steering-wheel. The manually returned direction indicator switch and combined horn-push is replaced by a direction indicator switch of self-cancelling type with a warning lamp in the end of the operating lever.

The steering-column and wheel may be interchanged as a complete assembly with the earlier column and wheel. The new horn-push and self-cancelling direction indicator switch cannot readily be fitted to earlier assemblies.

This modification is incorporated on cars from the following numbers: 704254 (Traveller), 705622 (Two-door), 705224 (Four-door).

The procedure for removing and replacing the new components is given as follows.

Steering-column assembly

Disconnect the positive battery terminal.

Disconnect the horn and direction indicator wires at the snap connectors beneath the fascia and draw them through the grommeted hole in the fascia.

In order to preclude the possibility of disrupting the spring contact blade in the direction indicator switch by relative movement between the column and outer tube it is advisable to remove the switch (as detailed under **'Direction indicator switch'** below) before freeing either the column or the outer tube.

Remove the clamp nut and bolt from the splined lower end of the column. Remove the two domed nuts and screws from the column support bracket and clamp below the fascia, and remove the clamp.

Disengage the column assembly from the pinion splines and lift it from the car.

When replacing the column assembly reverse the instructions given above and observe the precaution detailed in Section JJ.1.

Steering-wheel

Disconnect the positive battery terminal.

Three-spoke wheel

Remove the horn-push from the centre of the steering-wheel by taking out the chromed countersunk screw from the hub of the wheel. Remove the small circlip and plain washer from the terminal on the horn wire and then take away the rubber ferrule with its spring and washer. Remove the steering-wheel retaining nut, using Service tool 18G 512 or a suitable box spanner. Carefully push the horn wire and terminal inside the steering-column to prevent them being damaged by the steering-wheel extractor. Withdraw the steering-wheel, using the extractor, Service tool 18G 310.

Two-spoke wheel

Remove the horn-push from the centre of the steering-wheel by carefully levering it out. Remove the steering-wheel retaining nut, using Service tool 18G 512 or a suitable box spanner and then tap the steering wheel off the column serrations with a mallet.

Replacement is a reversal of the above procedure. Ensure that the steering-wheel retaining nut is tight.

Direction indicator switch

Remove the steering-wheel as detailed above.

Disconnect the horn and direction indicator wires at the snap connectors beneath the fascia and draw them through the grommeted hole in the fascia. Remove the column support bracket clamp below the fascia to release the wires.

Remove the three chromed screws from the switch plastic cover. Pull the cover upwards off the switch over

the end of the steering-column. Extract the two screws securing the switch clamp to the column outer tube and remove the switch assembly.

Reassembly is a reversal of the above sequence. Make certain that the switch is located on the column outer tube so that the cancelling mechanism works correctly. Position the plastic cover so that it does not foul the switch operating lever.

Section JJ.3

STEERING LOCK IGNITION SWITCH

Operation

Turn the key in a clockwise direction to the position marked 'IGN' ('FAHRT') to switch on the ignition, and further in the same direction to 'START' to operate the starter. If the engine fails to start the key must be returned to the 'GARAGE' position before the starter can be operated again.

To lock the steering, turn the key anti-clockwise to the 'LOCK' ('HALT') position and withdraw it, then turn the steering-wheel until the lock is heard to click into engagement. With the switch in the 'GARAGE' position the ignition is switched off and the steering lock is disengaged. The key must be removed when the switch is in the 'GARAGE' position.

Towing

When towing the car for recovery, the switch must be in the 'GARAGE' position and the key removed.

For tow-starting the switch must be at 'IGN' ('FAHRT').

Removal

To remove the lock disconnect the battery and the ignition/starter switch connections and turn the lock setting to 'GARAGE' to unlock the steering. Free the steering-column assembly as described in Sections JJ.1 and JJ.2 and remove the lock securing bolts with an easy-out.

WARNING.—The steering lock/ignition/starter switch and its electrical circuits are designed to prevent the ignition system and starter from being energized while the steering lock is engaged. Serious consequences could result from alteration or substitution of the steering lock/ignition switch or its wiring.

SECTION K

THE FRONT SUSPENSION

THE FRONT SUSPENSION COMPONENTS

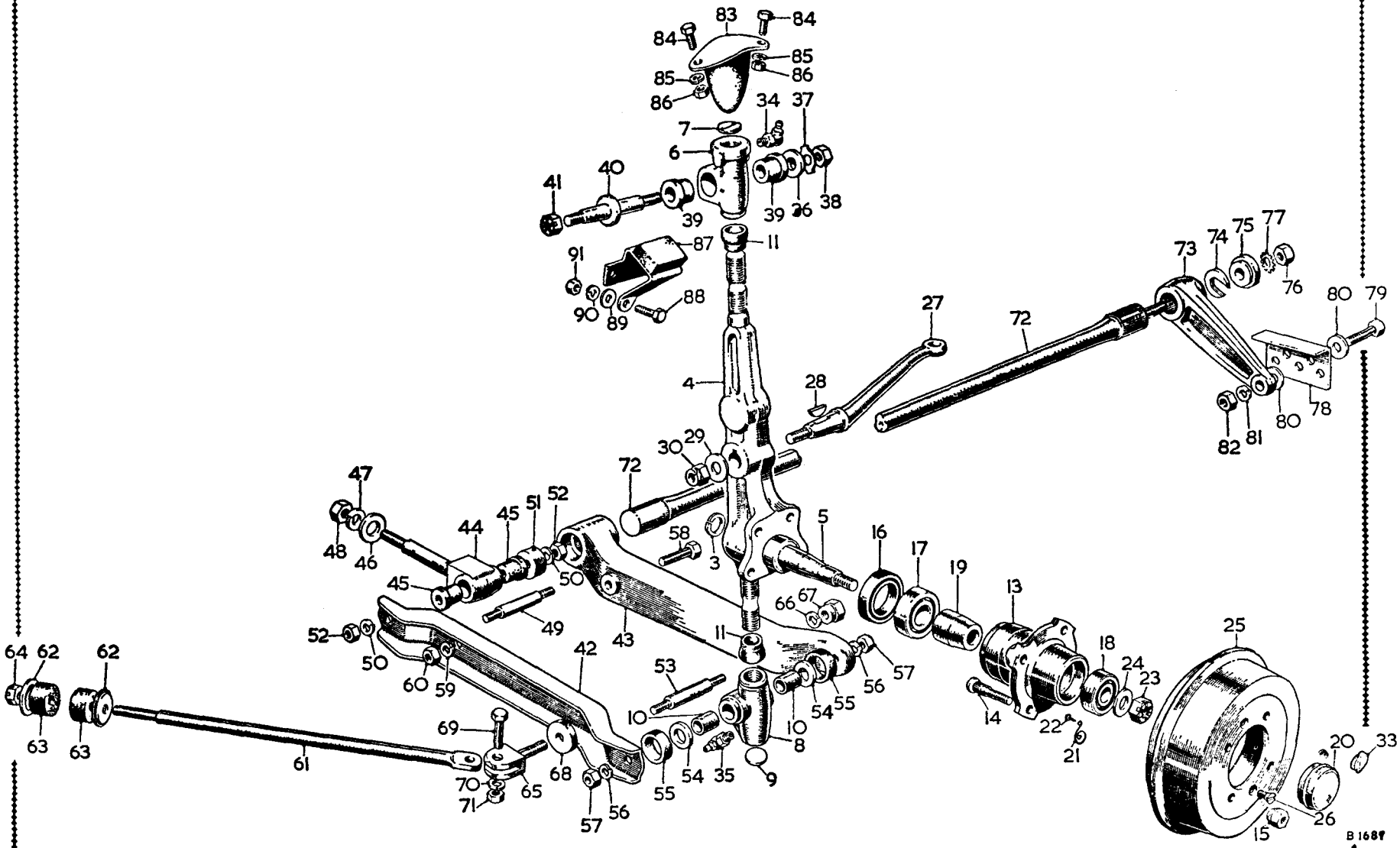

KEY TO THE FRONT SUSPENSION COMPONENTS

No.	*Description*
3.	Circlip.
4.	Swivel pin and stub axle—L.H.
5.	Stub axle—L.H.
6.	Upper link—L.H.
7.	Plug.
8.	Lower link—L.H.
9.	Plug.
10.	Bush.
11.	Seal (rubber).
13.	Hub assembly.
14.	Wheel stud.
15.	Nut for wheel stud.
16.	Hub oil seal.
17.	Inner bearing.
18.	Outer bearing.
19.	Spacer for bearing.
20.	Cap.
21.	Spring—anti-static (when radio is fitted).
22.	Screw for spring (when radio is fitted).
23.	Nut—L.H. thread (to stub axle).
24.	Washer for nut.
25.	Brake drum.
26.	Screw.
27.	Steering lever—L.H.
28.	Key—to swivel pin.
29.	Washer for swivel pin.
30.	Nut for swivel pin.
33.	Dust seal—brake.

No.	*Description*
34.	Lubricator for upper link.
35.	Lubricator for lower link.
36.	Washer for rear pivot.
37.	Tab washer for rear pivot.
38.	Nut for rear pivot.
39.	Bush for upper link (rubber).
40.	Pivot—damper arm.
41.	Nut for front pivot.
42.	Lower arm—front.
43.	Lower arm—rear.
44.	Eyebolt.
45.	Bush for eyebolt (rubber).
46.	Washer—eyebolt adjusting.
47.	Lock washer—eyebolt to frame.
48.	Nut—eyebolt to frame.
49.	Fulcrum pin—eyebolt to arms.
50.	Spring washer for fulcrum pin.
51.	Spigot pivot (rear).
52.	Nut for fulcrum pin eyebolt.
53.	Fulcrum pin—link to arms.
54.	Thrust washer for link fulcrum pin.
55.	Sealing ring for link fulcrum pin.
56.	Spring washer for fulcrum pin nut.
57.	Nut for link fulcrum pin.
58.	Bolt—rear arm to front.
59.	Spring washer for nut.
60.	Nut for bolt.
61.	Tie-bar.
62.	Cup washer.

No.	*Description*
63.	Bush to frame (rubber)
64.	Slotted nut.
65.	Fork to lower arm.
66.	Spring washer for nut.
67.	Nut for fork.
68.	Washer for fork nut.
69.	Bolt—to fork.
70.	Spring washer for nut.
71.	Nut for bolt.
72.	Torsion bar.
73.	Lever—rear end.
74.	Washer—lever retaining.
75.	Washer—lever locating.
76.	Nut.
77.	Washer for nut.
78.	Adjuster plate.
79.	Bolt—lever to frame.
80.	Washer for bolt.
81.	Spring washer for nut.
82.	Nut for bolt.
83.	Bump rubber assembly—L.H.
84.	Screw to wheel arch.
85.	Spring washer for nut.
86.	Nut for screw.
87.	Rebound check bracket assembly.
88.	Screw—to wheel arch.
89.	Plain washer for screw.
90.	Spring washer for nut.
91.	Nut for screw.

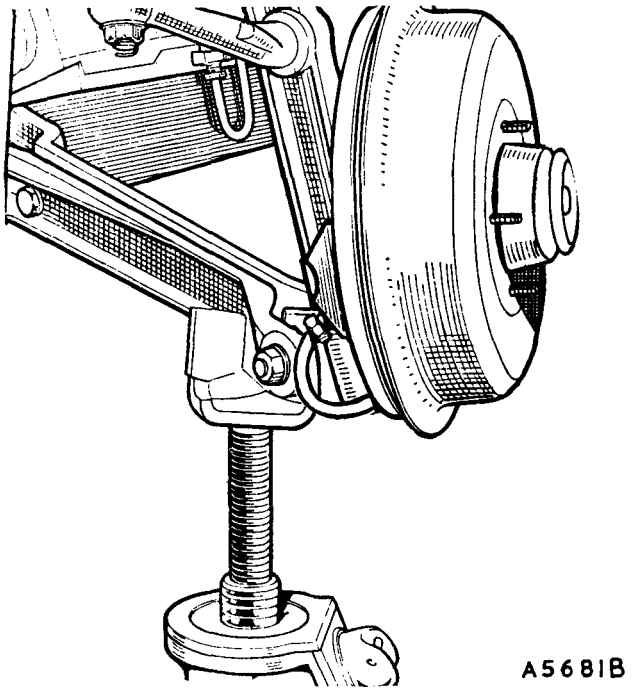

Fig. K.1

When jacking the suspension arms care must be taken to prevent the jack from slipping. The use of a special jack pad is advised

GENERAL DESCRIPTION

The independent front suspension comprises torsion bars disposed longitudinally and splined into arms attached to the lower ends of each swivel pin. At their upper ends the swivel pins are linked to the hydraulic damper arms.

The grease nipples provided at the swivel pin links are the only points requiring lubrication attention, the inner ends of the lower arms being anchored to the frame members in flexible rubber bushes.

Tie-rods between the forward side of the lower suspension arms and the frame members maintain rigidity of the assembly during acceleration and braking and abnormally rough road conditions.

The trim of the suspension is adjusted at the rear end of each torsion bar by means of an adjuster plate in conjunction with the torsion bar rear end lever.

MAINTENANCE

NOTE.—Rubber bushes are used in the suspension and the rear springs are rubber-mounted. It is therefore most important not to lubricate these components with oil. If squeaks develop the springs should be sprayed with Lockheed Super Heavy Duty Brake Fluid.

Normal maintenance is confined to lubrication of the linkage.

A grease gun should be applied to the nipples at the top and bottom of the steering swivel pins at the specified intervals. The recommended lubricant is grease to Ref. C (page PP.2). If the car is operated in dusty conditions the swivel pins should be lubricated more often.

Section K.1

TRIMMING THE TORSION BARS

The adjuster plate provided at the rear end of each torsion bar should be used to correct any list on the car which develops if the torsion bars do not settle evenly.

To carry out this adjustment raise the front of the car until the road wheels are clear of the ground and remove the hub disc and wheel.

Place a jack beneath the outer end of the lower suspension arm and raise it until the hydraulic damper arm at the top of the swivel pin is just clear of the rubber rebound pad. Care must be taken to see that the jack is not liable to slip while it is taking the torsion bar load.

Remove the nut and bolt securing the tie-rod to the fork on the suspension arm and remove the nuts and bolts retaining the forward half of the arm.

Disengage the lower swivel pin link from the suspension arm and lower the jack until the load is taken off the torsion bar.

Slacken the nut and washer on the rear end of the torsion bar.

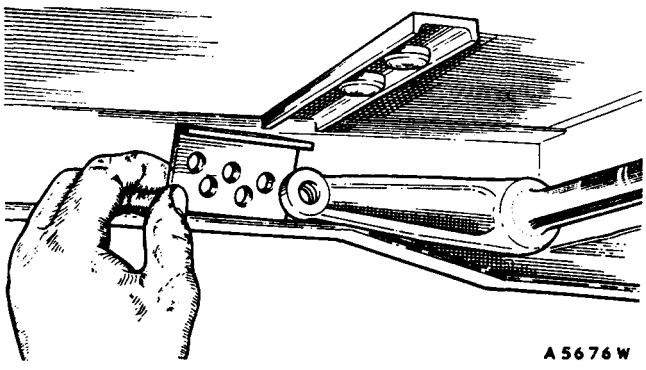

Fig. K.2

A vernier plate is employed to provide accurate adjustment of the torsion bars

Withdraw the nut and bolt securing the torsion bar rear end lever to the frame cross-member and slide the adjuster plate in the required direction. Take care not to lose the flat washer which is between the lever and the plate.

To set the car upwards select a lower hole in the adjuster plate. Each successive hole raises the car approximately ¼ in. (6·3 mm.). If the plate is moved in the reverse direction the car is, of course, lowered.

If the lever is rotated one spline on the torsion bar the car will be raised approximately 1½ in. (3·8 cm.).

Replace the nut and bolt in the rear end lever and fully tighten it. The remainder of the assembly procedure is a reversal of the order of dismantling.

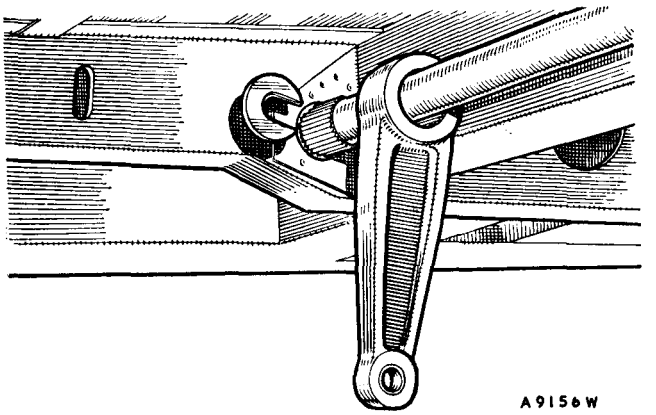

Fig. K.4

Inserting the slotted retaining washer between the end of the torsion bar and the frame member. Note that the bevel is towards the lever

Section K.2

REMOVING A TORSION BAR

Raise the front of the car until the road wheels are clear of the ground.

Remove the hub disc and wheel. Place a jack beneath the outer end of the rear portion of the lower suspension arm and raise it until the hydraulic damper arm at the top of the swivel pin is just clear of the rubber rebound pad. Care must be taken to see that the jack is not liable to slip while it is taking the torsion bar load. A special end fitment on the jack is advisable (see illustration Fig. K.1).

Withdraw the securing bolt and disengage the tie-rod end from the fork on the suspension arm. Remove the nuts and bolts securing the halves of the lower suspension arm and remove the front half of the arm. Disengage the swivel pin link from the suspension arm and lower the jack until the load is off the torsion bar.

Remove the nut from the rear end of the torsion bar and the nut and bolt securing the torsion bar lever to the frame. Slide the lever forward along the torsion bar until it is clear of the splines and remove the lever locating and retaining washers.

Withdraw the torsion bar from the suspension arm splines and lift it clear.

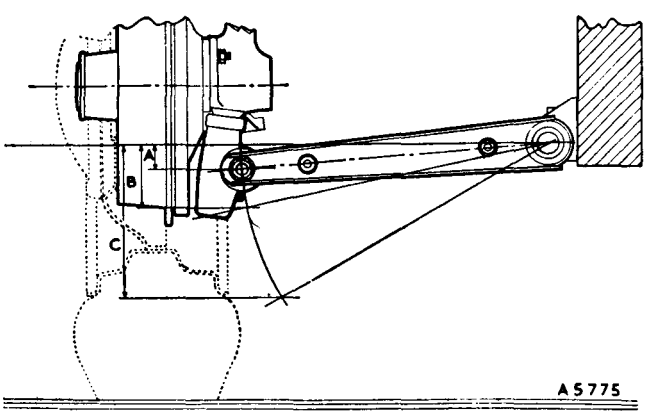

Fig. K.3

The position of the lower arm of the suspension under various conditions of loading is indicated in this diagrammatic drawing, where (A) *is the position under a full load of three passengers and full equipment* (⅜ *in. or* ·95 *cm.*). (B) *is the position with the car unladen* (1⅝ *in. or* 4·1 *cm.*), *and* (C) *is the assembly position with no load on the torsion bar* (5⅝ *in. or* 14·3 *cm.*)

Section K.3

RESETTING AND REPLACING THE TORSION BARS

A torsion bar which has been fitted and used on one side of the car must on no account be transferred for use on the other side. The torsion bars are only interchangeable when new. They become 'handed' once they have been in service and must from then on always be used on the same side of the car.

There are 48 splines on each end of the torsion bars, and for each consecutive spline position of the rear end lever a radial movement of the swivel pin of approximately 1½ in. (3·8 cm.) is provided.

To replace the torsion bar support the front end of the car and adjust the jack beneath the lower suspension arm until there is a difference in height of 5⅝ in. (14·3 cm.) between the inner and outer suspension arm fulcrum pins.

NOTE.—The car must be standing on a level floor and measurements taken from a horizontal flat plate.

When a new torsion bar is to be fitted this difference in height must be increased to 6 in. (15·2 cm.) to allow

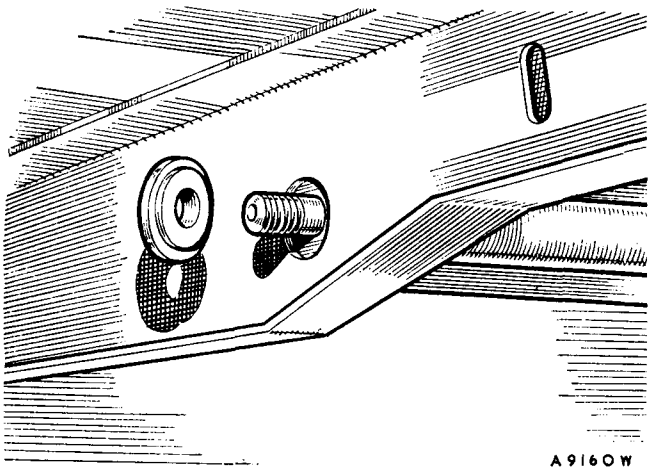

Fig. K.5

The shouldered washer which locates the rear end of the torsion bar in the frame must be fitted with its shoulder engaging the hole in the frame

for the small permanent set which takes place when the bar is loaded for the first time.

Thread the rear end of the torsion bar through the rear end lever and the frame cross-member. The lever is offset and must be fitted with the recessed side to the rear.

Engage the front end of the torsion bar in the suspension arm and slide the lever over the rear end splines, bringing the eye of the arm into line with the slot in the frame cross-member.

Insert the slotted retaining washer between the lever and the cross-member with the countersunk side towards the torsion bar splines. Ensure that the washer fits into the register in the lever and refit the shouldered locating washer on the end of the torsion bar threaded attachment spigot. The small diameter of this washer **must register** with the hole in the frame. Replace the torsion bar retaining nut and washer.

Insert the adjuster plate and flat washer between the rear end lever and the frame. Align a hole in the adjuster plate with the lever eye and insert the locking bolt and flat washer from the rear. Replace and tighten the nut and spring washer.

Raise the jack until the lower swivel pin link engages the suspension arm. Ensure that the rubber seals and thrust washers are in position and replace the forward half of the suspension arm.

Replace and tighten the suspension arm, swivel link, and tie-rod nuts and bolts.

Lower the car onto level ground and check the difference in vertical height of the inner and outer suspension arm fulcrum pins. This measurement should be 1⅝ in. (4·1 cm.) and be the same on both right-hand and left-hand suspension assemblies.

Section K.4

REMOVAL AND REPLACEMENT OF THE SWIVEL PIN ASSEMBLY

The following instructions are for removing the swivel pin assembly with the brake-drum, hub, and brake-plate attached. These parts may be removed first, in accordance with the instructions given in Sections K.7 and K.8, and the brake-plate left suspended from the hydraulic damper arm rebound bracket with the flexible hydraulic brake pipe still attached, thus obviating the need to bleed the brakes after assembly.

Removal

Raise the front of the car and remove the wheel. Place a suitable jack beneath the suspension arm and lower the car until it is just taking the torsion bar load and the hydraulic damper arm clears the rubber rebound pad beneath it.

Unscrew the small union nut securing the hydraulic brake feed pipe to the flexible pipe beneath the bracket on the wing valance. Detach the flexible pipe by unscrewing the large hexagon nut, using a ⅜ in. spanner on the hexagon provided above the bracket to prevent the hose from turning (see Fig. M.13).

Remove the split pin and slacken off the slotted nut securing the steering tie-rod ball joint to the steering-arm. Tap the circumference of the steering-arm eye and, placing a support above the steering-arm, use a suitable brass drift applied to the ball joint nut to drive the ball pin from its tapering seating.

Remove the nut and bolt securing the tie-rod to the fork on the suspension arm and remove the nuts and bolts retaining the forward half of the arm.

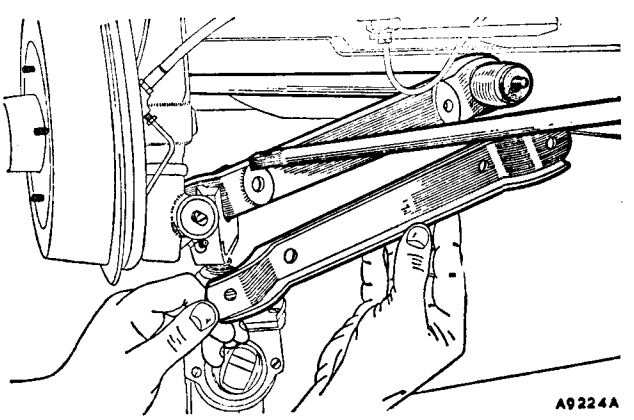

Fig. K.6

The front suspension arm must be removed before it is possible to withdraw the torsion bar

Disengage the lower swivel pin link from the suspension arm and lower the jack until the load is taken off the torsion bar.

On swivel pins with plain pivot pins

Tap back the lock washer and slacken the $\frac{7}{16}$ in. locknut and $\frac{9}{16}$ in. nut on the pivot bolt securing the swivel pin to the hydraulic damper arm. Remove the split pin and slacken the $\frac{7}{16}$ in. nut from the opposite end of the bolt. Tap the circumference of the eye in the hydraulic damper arm, place a support behind it, and use a brass drift to drive the bolt from its tapered seat.

Support the swivel pin assembly and withdraw the pin from the hydraulic damper arm, leaving the assembly free to be removed for further dismantling.

On swivel pins with screwed pivot pins

Remove the split pin from the nut attaching the pivot pin to the damper arm and unscrew the nut. Tap the circumference of the eye in the hydraulic damper arm, place a support behind it, and, using a brass drift, drive the pivot pin from the tapered seating in the damper arm. This will release the swivel pin assembly for further dismantling.

Replacement

The swivel pin assembly may be replaced without difficulty by carrying out the removal instructions in the reverse order, provided the following points are given special attention:

(1) The swivel pin and links fitted to the left-hand side of the car have left-hand threads at each end and those fitted to the right-hand side have right-hand threads.

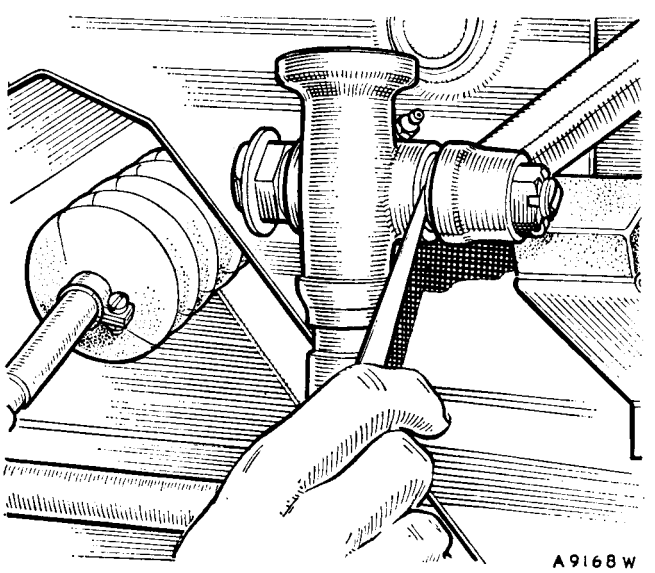

Fig. K.7

It is essential to give the upper swivel pin link an end-float of ·002 in. (·05 mm.) to ensure proper functioning. The clearance should be checked with a feeler gauge as shown

(2) The swivel pin links screw onto threads on each end of the swivel pin and the threads are waisted at their centre to avoid fouling the pivot bolts passing through the links. Before the pivot bolt is replaced the link must be correctly positioned on the thread.

First screw the link onto the swivel pin until the waisted portion of the swivel pin links up with the pivot bolt hole.

Place the pivot bolt in position in the link and screw the link to the extent of its maximum travel on the swivel pin thread; this is about three complete revolutions. Screw the link back approximately one and a half turns to obtain the maximum clearance for the pivot pin in each direction.

If the brake-plate has been removed from the swivel pin assembly the lower link must also be centralized in a similar manner before the brake-plate is replaced and before the swivel pin is fitted to the suspension arm.

(3) Before the lower steering knuckle link is bolted in position ensure that both thrust washers and rubber seals are fitted correctly.

(4) *In the case of plain-type pivot pins.* Replace both rubber seals on the taper pin securing the swivel pin to the hydraulic damper arm before it is placed in position, otherwise damage may occur when passing the rear seal over the lock washer.

IMPORTANT.—Plain-type pivot bolts in the upper swivel pin link must be given ·002 in. (·05 mm.) end-float. If they are fully tightened the suspension will become solid.

Tighten the large hexagon nut with a $\frac{9}{16}$ in. spanner and then slacken off one flat and adjust until there is ·002 in. (·05 mm.) clearance between the damper arm and the link. A light sideways tap should be given to the top of the swivel pin to ensure that it is hard against the nut and that the total clearance between the damper arm and the link does not in fact exceed ·002 in. (·05 mm.).

Replace and tighten the lock washer and nut and then re-check the clearance to ensure that it has not been lost. Secure the nuts with the lock washer.

In the case of bottom pivot bolts of the plain type, they must also have an end-float not exceeding ·002 in. (·05 mm.). A small clearance must remain, however, to ensure that the swivel link

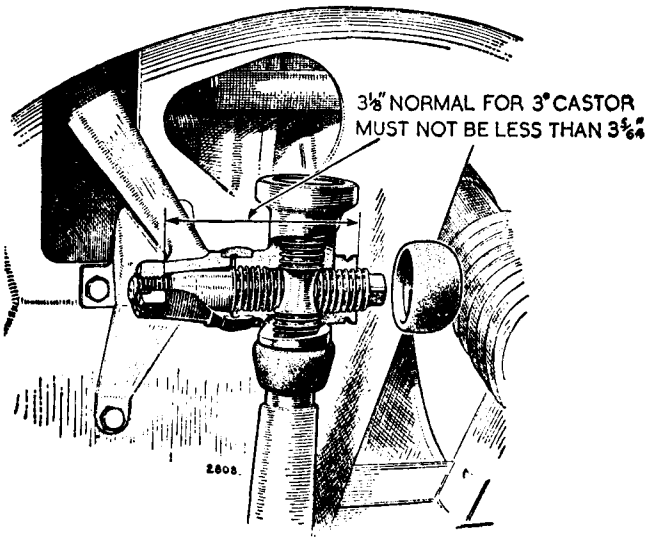

Fig. K.8

The dimension indicated in this illustration is most important to ensure free movement of the pivot pin in the link in the case of models fitted with links and pins of the screwed type

is able to move freely between the lower arms. If the clearance exceeds ·002 in. the shoulder of the pin must be ground to bring the clearance within this amount.

(5) *In the case of the screwed-type pivot pins.* Replace the rubber seal between the link and the eye of the damper arm before placing the arm in position and see that it is fitted with its smaller diameter (marked MOWOG) outwards so that it grips the damper arm. See also that it is not trapped when the arm is moved into position on the taper of the pivot pin. The castellated attachment nut should now be tightened lightly so as to take up play while still permitting the pivot pin to turn.

By means of the squared end of the pivot pin turn it in the required direction to give an over-all dimension of 3⅛ in. (79·4 mm.) and never less than 3 3/32 in. (78·6 mm.) from the outside of the damper arm to the outside of the link as indicated in Fig. K.8. Tighten up the castellated nut in this position and replace the split pin. Replace the rubber sealing cap on the boss of the link.

Section K.5

DISMANTLING AND EXAMINING THE SWIVEL PIN ASSEMBLY

Remove the swivel pin assembly as detailed in Section K.4 and remove the rubber seals and thrust washers from the swivel pin links. Unscrew the upper and lower links from the swivel pin ends. **The left-hand swivel pin has a left-hand thread at each end.**

Thoroughly clean and dry off all parts and examine them for wear.

Check the swivel pin links for wear across the thrust faces and in the threaded bores. When new, the links should be a free turning fit on the swivel pin, but without slackness. In service a certain amount of slackness is permissible, but when any doubt arises a new swivel link assembly should be fitted. Lubrication of the swivel link assemblies at the intervals recommended will considerably reduce wear on the threads and should be carried out regularly.

Check the top pivot pin for wear in its link. If either the link or pin is worn it must be renewed.

The two thrust washers fitted to the lower swivel pin link should be examined for wear. The faces should be flat and parallel.

Check that the grease nipples are clear.

If the rubber seals are damaged or worn they should be renewed.

Section K.6

REMOVAL AND REPLACEMENT OF THE LOWER SUSPENSION ARM

Remove the front suspension arm as detailed in Section K.4.

Remove the torsion bar as detailed in Section K.2.

This will enable you to remove the nut, washer, and fulcrum pin securing the arm to the eyebolt. This will permit you to remove the suspension arm.

Before the arm is replaced inspect the fulcrum pin and eyebolt rubber bushes. If either shows signs of wear new ones must be fitted.

Section K.7

REMOVAL AND REPLACEMENT OF THE BRAKE-DRUM AND HUB

Prise off the hub cover by inserting the flattened end of the wheel nut spanner in the depressions provided adjacent to the cover holding studs and giving a sideways twist.

Slacken the wheel securing bolts.

Raise the car until the wheel to be operated on is clear of the ground.

Unscrew the wheel bolts and remove the wheel.

Depress the centre of the hub grease retaining cap to release it and remove the cap from the hub.

Remove the split pin from the stub axle nut and unscrew the nut, remembering that the axle on the left-hand side of the car has a left-hand thread.

Remove the flat washer.

Fit the hub extractor (Service tool 18G 304) to the hub, using two adaptor bolts 18G 304 E (B.S.F.) or 18G 304 C (UNF.). Use the central extractor screw to withdraw the brake-drum and hub assembly.

Should the inner bearing, bearing spacer, and oil seal remain on the stub axle the bearing must be withdrawn with the aid of a separate extractor. Care must be taken not to damage the oil seal at the rear of the bearing.

IMPORTANT.—When the front hub has been removed the inner bearing, oil seal, and bearing spacer must be correctly replaced in the hub before it is refitted to the stub axle. If the hub is pressed on the shaft and the bearing and oil seal are not in their correct position the inner bearing will re-enter its housing but the oil seal will remain displaced and allow lubricant to reach the brake linings.

Replacement

If all grease has been cleaned from the hub and the bearings washed for examination, ensure that they are repacked with grease before the hub is reassembled.

Replace the bearing spacer with the chamfered side towards the small outer bearing and then press the large bearing into position. Replace the oil seal. The metal face of the oil seal is fitted away from the bearing.

Replace the hub on the stub axle shaft, replace the flat washer, and tighten the hub nut.

On Car No. 228267 and subsequently the front hubs are fitted with angular contact bearings and solid bearing spacers. When replacing these it is important to place the thrust side of each bearing towards the spacer. The thrust side is that side which carries the bearing part number.

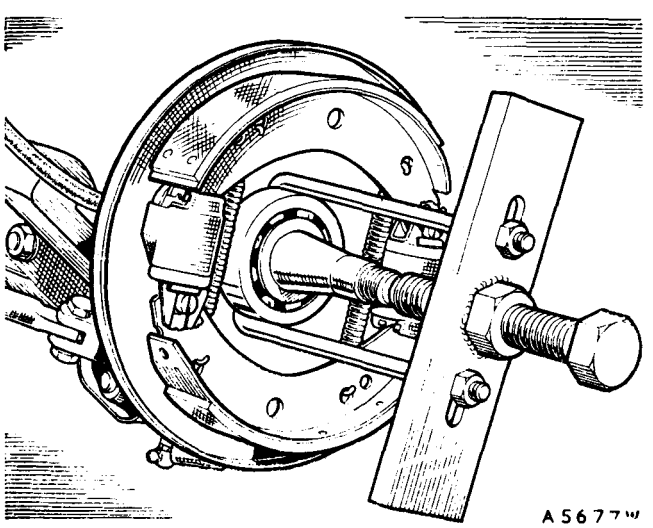

Fig. K.9

A special extractor tool 18G 309 and adaptor 18G 309 A are available for extraction of the inner ball bearing (not thrust type) and oil seal fitted to early models

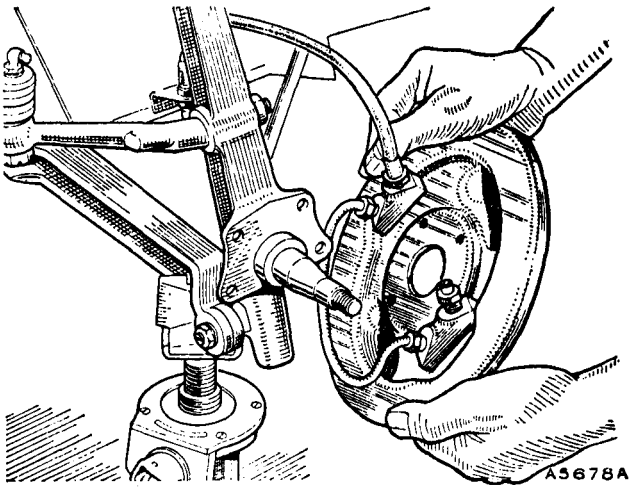

Fig. K.10

Removing the backplate complete with shoes and actuating mechanism

Section K.8

REMOVAL AND REPLACEMENT OF THE BRAKE BACKPLATE ASSEMBLY

Remove the brake-drum and hub as detailed in Section K.7.

If it is required to remove the brake backplate to the bench for attention, then the flexible hydraulic brake hose must be disconnected from its union at the wing valance, but this is not advisable unless absolutely necessary.

On later models the metal interconnecting pipe between the two wheel cylinders must be removed before the brake backplate can be detached from the stub axle owing to the pipe passing behind the swivel pin.

If the desired attention can be given without disconnecting the flexible brake pipe the brake backplate assembly can be hung on a suitable portion of the frame to take the load off the flexible pipe.

Unscrew the small union nut securing the metal feed pipe to the flexible pipe. Use a $\frac{3}{8}$ in. spanner on the hexagon provided above the bracket to prevent the hose from turning while unscrewing the large hexagon nut to detach the flexible pipe (see Fig. M.13).

Unscrew the four $\frac{1}{4}$ in. bolts and nuts securing the brake backplate to the stub axle flange and remove the brake backplate complete with brake-shoes and wheel cylinders.

Reassembly takes place in the reverse order to dismantling, but do not forget to bleed the brakes if the flexible pipe has been disconnected.

Section K.9

MODIFIED WHEEL MOUNTING

Later models are fitted with modified steering levers, swivel pins, and a modified stub axle and brake-drum providing a larger outer bearing. The grease retaining cap protecting the bearing is also different to accommodate the larger components.

Section K.10

FRONT SUSPENSION RATTLE

When front suspension rattle is experienced, particularly on cars fitted with plain swivel link pins, the following action should be taken:

(1) Ensure that all suspension bearings are adequately lubricated through the grease nipples with a grease gun and examine the steering gear assembly for visible oil leaks, since the lubricant in this assembly provides damping and subdues mechanical rattle.

Assuming the lubrication of the suspension system is satisfactory and the rattle persists:

(2) Examine the end-clearance of the top swivel pin link bearings when plain pins are fitted. If this exceeds ·002 in. (·05 mm.) the locknut should be released and the adjusting nut screwed up to give this figure. Retighten the locknut and lock with the tab washer in the new position. Regrease the bearing assembly after this operation.

If the rattle still persists:

(3) Check the outer ball connections for play along the axis of the tie-rod. If play in this plane is observed fit new joints.

Should the rattle still exist:

(4) The trouble is most likely to be in the steering-rack assembly. Remove the bellows and check the end-play of the inner ball joints. Adjust the joints to the minimum possible clearance which will give freedom of action. Next check the damper adjustment. In order to do this the spring inside the damper unit must be removed. The pinion to rack tooth clearance can then be ascertained as there is no loading. Remove shims one at a time from under the damper cap so that the tooth clearance is minimized. This adjustment is critical and it should not be so tight as to prevent the self-centring action of the steering. (The effect of this adjustment must finally be checked on the road.) Readjustment of the damper unit can be effected without draining the oil or removing the bellows. Reassemble and replace the bellows, renewing them if damaged. Recharge with ½ pint (·6 U.S. pint, ·28 litre) of oil to Ref. B (page PP.2). Care must be taken in reassembly to obviate oil leaks.

(5) If rattle still exists the links and pins should be replaced with the latest-type link and pin assembly described in Section K.13.

NOTE.—It should be borne in mind that front suspension rattles are more prevalent in hot weather due to the reduced lubricant viscosity. Suspension rattle should not be confused with damper noises. Should the complaint be traced to defective dampers, refer to the instructions regarding these in Section L.

Later models are fitted with a modified link and pin (see Sections K.11 and K.13).

Section K.11

ELIMINATION OF RATTLE AT TOP LINK

The fitting of screwed top links and pins has not proved to be a complete cure for rattle between the top link and the pivot pin, and a modified plain-type pin has been introduced, utilizing special thrust washers and a double spring washer.

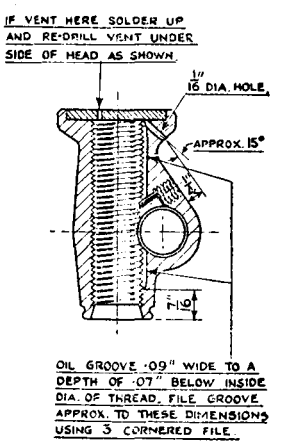

Fig. K.11
The location of the new vent hole and lubricant groove

Cars fitted with the original plain pins can be converted by fitting the following new components:

Description	*Part No.*
Thrust washer (front)	135950
Pivot pin	135103
Spring washer (½ in. double coil)	SW 208 N
Thrust washer (rear)	101905
Seal	183237
Locknut..	FN 208 Z (½ in. B.S.F.)
Washer (½ in. × 1¼ in. × ·08 in.)	278 U 2

The swivel pin link requires slight modification by the elimination of the vent hole in the disc sealing the top of the link and providing a lubricant groove and bleed hole on the pin side of the link.

The lubricant groove can be filed, using a three-cornered file, to a depth of ·07 in. (1·78 mm.) below the inside diameter of the thread, with a width of ·09 in. (2·29 mm.) approximately, as shown in the illustration (Fig. K.11).

The hole in the sealing disc should be sealed with a blob of solder or a small rivet and the new bleed hole drilled so that it communicates with the upper extremity of the lubricant groove.

Assemble the pin in the link with its tapered end forward, place the front thrust washer in position in the link, and place the seal (Part No. 183237) over the washer and the seating in the boss of the link. Attach to the damper arm.

Place the rear thrust washer (Part No. 101905) on the rear end of the pin, followed by the double coil spring washer (Part No. SW 208 N), the seal (Part No. 183237), the seating washer (Part No. 278 U 2), the original locknut, the lock washer (Part No. 135104), and the new locknut (Part No. FN 208 Z).

Adjustment

Make sure that the pin is firmly bolted onto the damper arm and split-pinned.

Tighten up the inner of the two locknuts at the rear end of the pin so that it is solid and then slacken it back to the extent of two flats. Tighten the outer locknut firmly and turn the tab washer onto both nuts in order to lock them.

Cars with screwed swivel pin links and pivot pins

On cars fitted with the screwed-type link and pivot pins new upper link pins (Part Nos. 127910 R.H., 127911 L.H.) will have to be fitted in place of the screwed type in addition to the parts detailed above.

When fitting new links do not forget to centralize them as indicated in Section K.4.

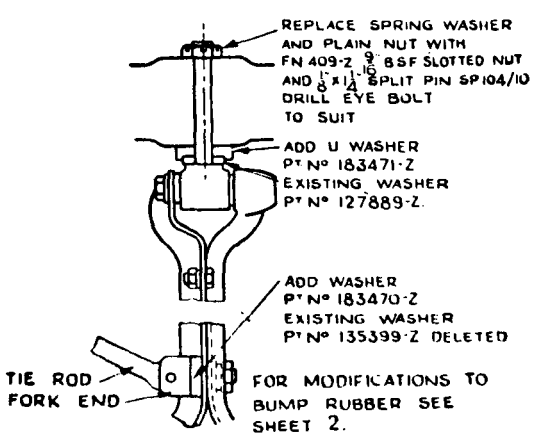

Fig. K.12

The modifications to the mounting of the lower suspension arm to maintain the correct steering geometry when fitting the rubber-bushed top links

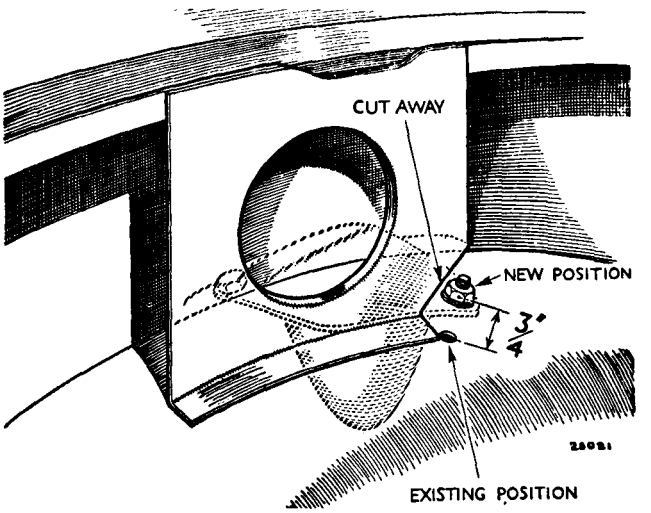

Fig. K.13

The repositioning of the bump rubber necessary with the installation of the rubber-type links

Lubrication

It is important to note that adequate lubrication is an important factor and that the swivel pin links should be lubricated with a grease gun at the specified intervals, or more often if the car is used under dusty conditions.

Section K.12 (Cancelled)

Section K.13

FITTING RUBBER-BUSHED TOP LINKS

The development of a top link with a flexing rubber bush has resulted in considerable improvement in the effective life and silence of the link bearing, and this should be carried out as a service modification whenever possible when dealing with complaints of top link rattle.

The special top links (Part Nos. 183602 and 183603) and associated pivot pins (Part No. 183424) will service all types of swivel pins provided that the complete assembly of link and pin are fitted as indicated and the bump rubber is repositioned.

(1) Dismantle the top swivel pin assembly by releasing the pivot pin from the damper arm as detailed in Sections K.4 and K.5.

NOTE.—It is not necessary to disconnect the brake hose to carry out the change to the new assembly. Remove the top link completely from the top of the swivel pin.

(2) Slacken the eyebolt forming the anchorage for the lower suspension arm to the frame and slip the recessed 'U' washer (Part No. 183471) between the existing washer and the frame, as indicated in Fig. K.12. Replace the spring washer and plain

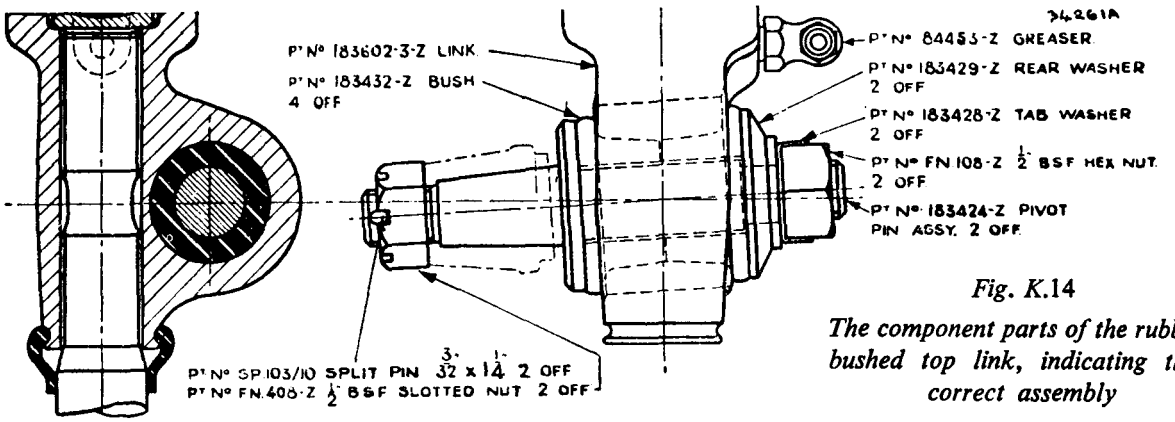

Fig. K.14

The component parts of the rubber-bushed top link, indicating their correct assembly

nut of the eyebolt with a $\frac{9}{16}$ in. B.S.F. slotted nut (Part No. FN 409 Z) and split-pin in position after tightening.

(3) Release the tie-rod fork ends from the outer ends of the lower suspension arms and replace the existing washer with one to Part No. 183470. Refit the fork end to the suspension arm.

(4) Assemble the rubber bushes and new pivot pins to the top links as shown in Fig. K.14, but leave the pivot pin nut retaining the rubbers slightly loose so that the rubbers can still turn on the pin.

(5) Assemble the top links to the swivel pins by screwing them fully home and then screwing them back approximately one complete turn so that the lug is towards the centre of the car.

(6) Insert the tapered end of the pivot pin into the arm of the damper and tighten it up firmly onto the taper with the retaining nut. (It may be necessary to slacken the lower arm fixing bolts to provide sufficient movement.) Split-pin the nut when fully tightened.

(7) Release the jack and allow the car to rest normally on its springs. Now tighten up the pivot pin rubber retaining nut and lock it in position with its tab washer.

(8) Reposition the bump rubbers by removing the rear bolt, slackening the front bolt, and swinging the bump rubber so that the rear fixing hole is moved $\frac{3}{4}$ in. (19 mm.) farther away from the centre-line of the car. Drill a new hole $\frac{9}{32}$ in. (7 mm.) diameter in this position and bolt the bump rubber in the new location after clearing away the corner of the stiffener as necessary.

(9) Re-track the front wheels. This is most important.

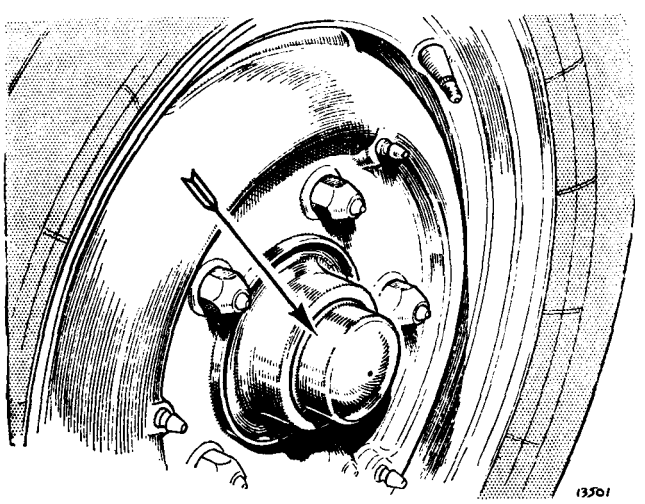

Fig. K.15

The modified grease-retaining cap fitted to the front hubs of later models. On later models the wheels are secured by studs and nuts

Section K.14

MODIFIED FRONT HUB GREASE CAP

Later models are provided with grease caps which are a push fit on the end of the front hubs, and these have to be prised off carefully for replenishment with grease at overhaul periods. Use one of the greases recommended under Ref. C (page PP.2).

Section K.15

MODIFIED SWIVEL PIN ASSEMBLY

A modified swivel pin assembly (Part Nos. 183889 R.H., 183890 L.H.) is fitted to cars subsequent to No. 161856. This assembly includes a new swivel pin lower link (Part Nos. 183770 R.H., 183771 L.H.) which is fitted with a bush (Part No. 183774), thrust washer (Part No. 183775), and a sealing ring (Part No. 183776), all of which are renewable.

The new assembly is interchangeable with the older type (Part Nos. 183781 R.H., 183782 L.H.). But when fitting a new-type lower link on cars originally fitted

with the old type the thrust washer (Part No. 183775) and a sealing ring (Part No. 183776) must also be fitted and will be supplied automatically when ordering a lower link for cars prior to No. 161857.

Section K.16

SWIVEL PIN RETHREADING PROCEDURE

After a considerable period of service some wear may be anticipated on the swivel pin threads, resulting in the upper and lower links being a slack fit and possibly causing noise in operation. Assuming attention be given before wear becomes too extensive, it is now possible to reclaim the swivel pins by cutting a ·015 in. (·38 mm.) undersize thread. Suitable undersized upper and lower links are available under the following part numbers:

Description		*Part No.*
R.H. upper swivel pin link	..	AJA 4005
R.H. lower swivel pin link	..	AJA 4009
L.H. upper swivel pin link	..	AJA 4006
L.H. lower swivel pin link	..	AJA 4010

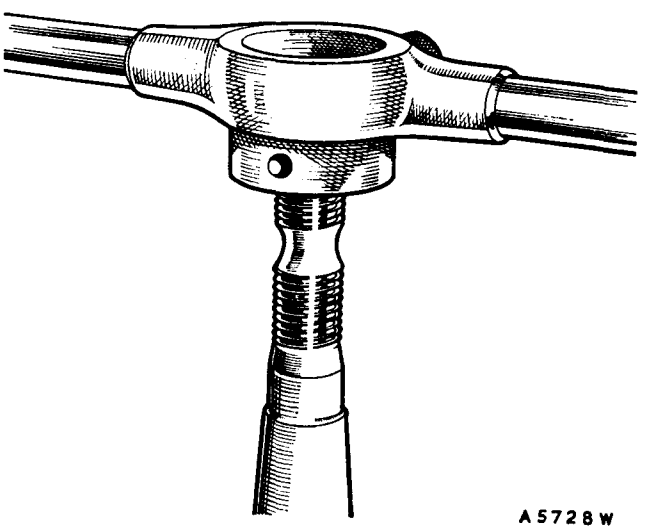

Fig. K.16

A special die nut in use. Note the depth of the die, which enables it to span the relieved portion of the thread. The register on the side of the die allows it to be reversed in the holder when necessary

The undersized swivel pin links will be painted orange for identification purposes.

In order to cut a new thread die nut set Part No. 18G 305 A may be employed, and this comprises one R.H.- and one L.H.-threaded die nut suitably etched for identification purposes. The threads for the upper and lower links are similar. A die nut holder (Part No. 18G 305) is also available.

The die nuts will fit a standard die nut holder, and to avoid the possibility of damage care must be exercised to obtain correct alignment when commencing the cut. A suitable cutting oil (lard oil) is required in generous quantities when the cut is being made after the threads have been thoroughly cleaned.

Section K.17

LATER-TYPE BRAKE-DRUMS AND HUBS

Studs and nuts are used on later models to secure the wheel (Fig. K.15), and when this is the case the brake-drum may be removed independently of the hub by the removal of the two countersunk recessed-headed screws.

To remove the hub, having first jacked up the vehicle and removed the wheel, prise off the hub cap and remove the split pin from the stub axle nut and unscrew the nut, remembering that the axle on the left-hand side of the car has a left-hand thread. The hub may now be withdrawn, using the Service tool (18G 304) and the two bolts (18G 304 F) which screw onto the studs. Should the inner bearing and oil seal remain on the stub axle, the bearing must be withdrawn, using Service tool 18G 309.

Section K.18

STRENGTHENED SWIVEL PIN ASSEMBLIES

Strengthened swivel pin assemblies are introduced at Car No. 462458. The new assemblies (Part Nos. ATA 4000 R.H., ATA 4001 L.H.) are completely interchangeable with the original assemblies.

When fitting the new assemblies to cars prior to Car No. 462458 the steering levers **must** be fitted to the lower mounting holes in the assemblies.

SECTION L

THE HYDRAULIC DAMPERS

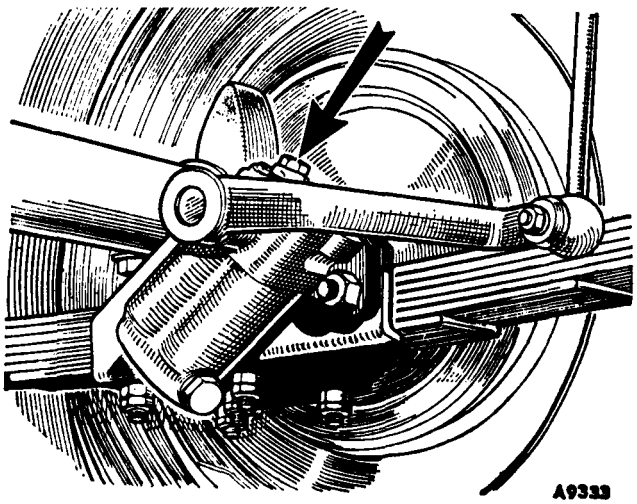

Fig. L.1

The rear dampers should be removed from their brackets on the rear springs before being replenished

GENERAL DESCRIPTION

Hydraulic dampers are fitted to the front and rear suspensions. All the working parts are submerged in oil.

The hydraulic dampers are carefully set before dispatch and cannot be adjusted without special equipment. Their design is such that they are capable of giving long service without attention other than the periodical replenishment of the fluid.

MAINTENANCE

The maintenance of the hydraulic dampers should include a periodical examination of their anchorage to the chassis and axle and tightening the fixing bolts up as required. For replenishing the fluid **the tops must be thoroughly cleaned before the filler plug is unscrewed.** While this can be achieved satisfactorily in the case of the front dampers, in view of their protected and accessible position, this is not satisfactory in the case of the rear dampers, which **must** be removed from the car for this attention.

The cheese-headed screws securing the cover-plate must be kept fully tightened to prevent leakage of the fluid.

No adjustment of the dampers is required or provided. Any attempt to dismantle them will seriously affect their operation and performance. Should this be necessary, they must be returned to their makers for attention.

Section L.1

REMOVAL AND REPLACEMENT OF THE DAMPERS

To withdraw the rear dampers from their anchorage brackets remove the split pin and the $\frac{5}{16}$ in. nut securing the damper arm link to the frame and extract the rubber bushes. Remove the link from its pivot bolt and the two $\frac{5}{16}$ in. nuts, bolts, and spring washers securing the damper body to the spring bracket.

To disconnect the front suspension raise the front of the car and remove the hub cap and road wheel.

Place a jack beneath the outer end of the lower suspension arm and raise it until the damper arm at the top of the swivel pin is just clear of the rebound pad.

Extract the split pin and slacken the $\frac{7}{16}$ in. slotted nut securing the swivel pin bolt to the damper arm. Tap the circumference of the eye and, placing a support behind the arm, use a copper hammer to drive the bolt from its tapered seat.

The damper may be withdrawn after removal of the nuts and bolts securing it to the bulkhead cross-member. Note that a protector shield between the exhaust pipe and the left-hand damper is attached to the damper securing bolts.

Replacement of the dampers is carried out in the reverse order to the removal procedure, but if the rubber bushes on the rear damper links are worn new ones must be fitted. After replacing and tightening the swivel pin bolt in the eye of the front damper arm check the clearance between the arm and the swivel pin link. There must be a clearance of ·002 in. (·05 mm.).

If the clearance is not correct it must be adjusted as described in Section K.4.

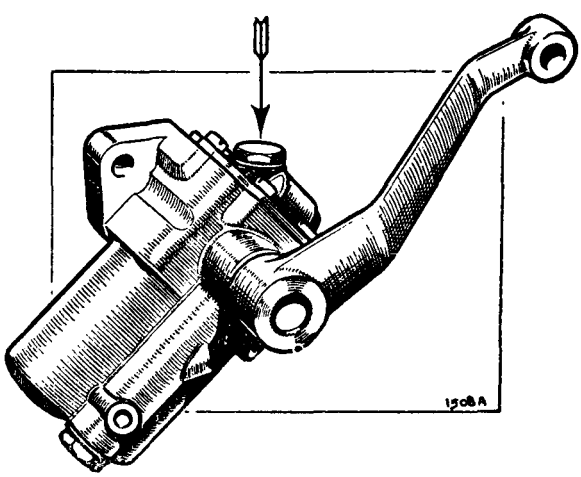

Fig. L.2

The filler plugs must be carefully cleaned before removal

When handling dampers that have been removed from the car for any purpose it is important to keep the assemblies upright as far as possible, otherwise air may enter the operating chamber, resulting in free movement.

NOTE.—Before fitting the link to the attachment on the axle or swivel pin it is advisable to work the lever arm a few times through its full range of movement to expel any air which has found its way into the operating chamber.

Section L.2

TESTING HYDRAULIC DAMPERS

If there is any doubt that the road springs are adequately damped the condition of the springs and the tyre pressures should also be considered as these have an appreciable bearing on the results obtained.

If the hydraulic dampers do not appear to function satisfactorily an indication of their resistance can be obtained by carrying out the following check.

Remove the dampers from the car.

Hold them in a vice and move the lever arm up and down through its complete stroke. A moderate resistance throughout the full stroke should be felt; if, however, the resistance is erratic, or free movement in the lever is noted, lack of fluid is indicated or there may be air in front of the piston. The free movement should not exceed ⅛ in. (3 mm.) at the outer end of the arm.

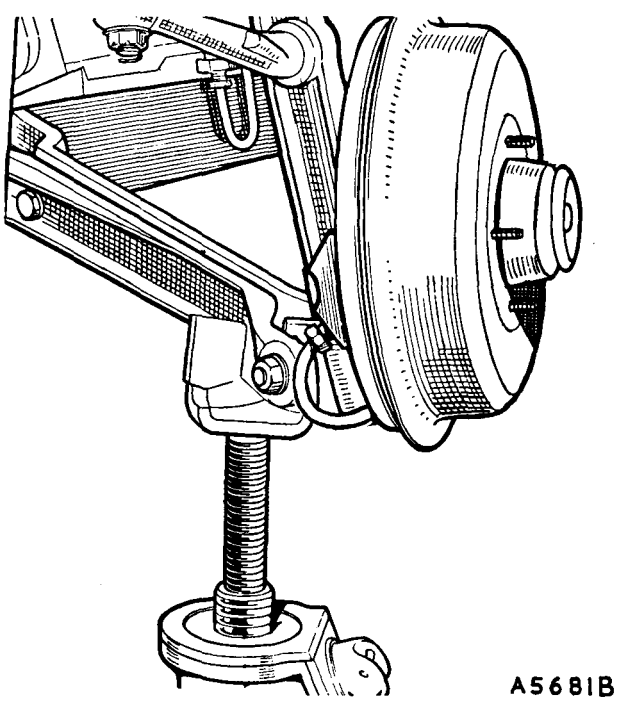

Fig. L.3

How the jack is used to raise the damper arm just clear of the rebound pad. Note the use of a special jack pad to prevent slipping

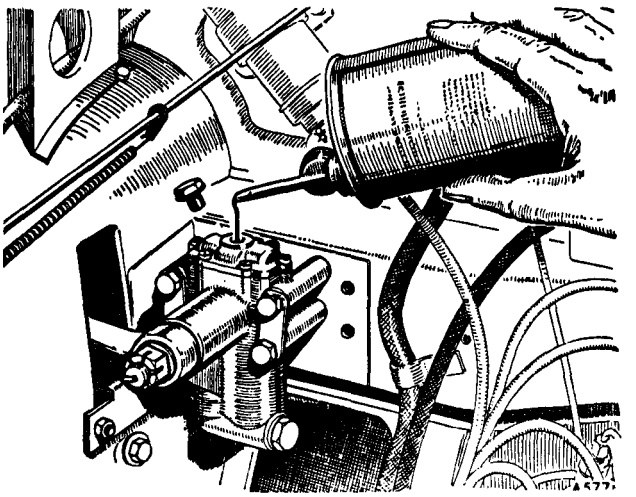

Fig. L.4

Replenishing the front dampers can be carried our in position, but they must be well cleaned first

If the addition of fluid (added to the level given in Section L.3) and working the arm over its full range of travel a number of times give no improvement a new damper should be fitted.

Too much resistance, i.e. when it is not possible to move the lever arm slowly by hand, indicates a broken internal part or a seized piston; in such cases the damper should be changed for a new or reconditioned one.

Section L.3

TOPPING UP WITH FLUID

The front dampers may be replenished in position, provided the tops have been thoroughly cleaned to ensure that when the filler plug is extracted no dirt falls into the filler orifice.

This is most important as it is absolutely vital that no dirt or foreign matter should enter the operating chamber.

The rear dampers **must** be removed from the car before they are given replenishment attention.

The use of Armstrong Super (Thin) Shock Absorber Fluid in the Armstrong dampers is recommended. (If this fluid is not available any good-quality mineral oil to

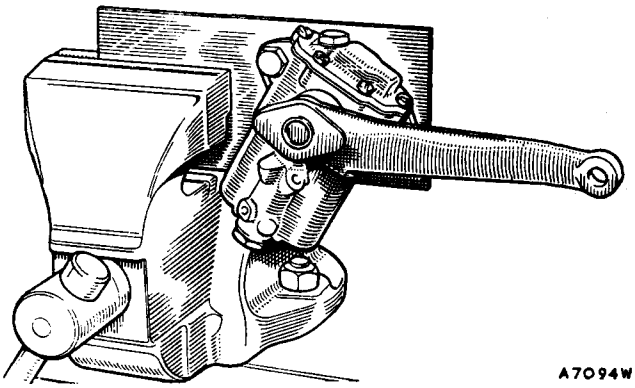

Fig. L.5

When holding a hydraulic damper in a vice do so by its normal attachments and use a supporting plate

Specification S.A.E. 20/20W should be used, but this alternative is not suitable for low-temperature operation.)

When fluid has been added the lever arm should be worked throughout its full stroke to expel any air that might be present in the operating chamber before the filler plug is replaced.

The interior of the body should be filled with fluid to within ⅜ in. (10 mm.) from the top of the cover.

Section L.4

MODIFIED DAMPERS

At Car No. 24067 Armstrong DAS8/R dampers replace DAS8. The later-type dampers have a special seal fitted to the rebound piston to prevent high-temperature fade, and those fitted to the rear of the car also have thicker flanges which require longer mounting bolts.

The new dampers must be fitted in pairs only.

The new front dampers are identified by a spot of green paint and the rear ones by the valve, which is now horizontal below the bump piston.

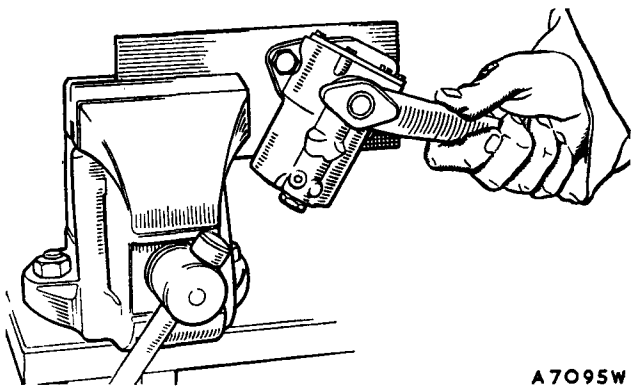

Fig. L.6

When testing a damper it is essential to actuate the lever arms over their full range of travel

SECTION M

THE BRAKING SYSTEM

ARRANGEMENT OF HYDRAULIC BRAKE SYSTEM

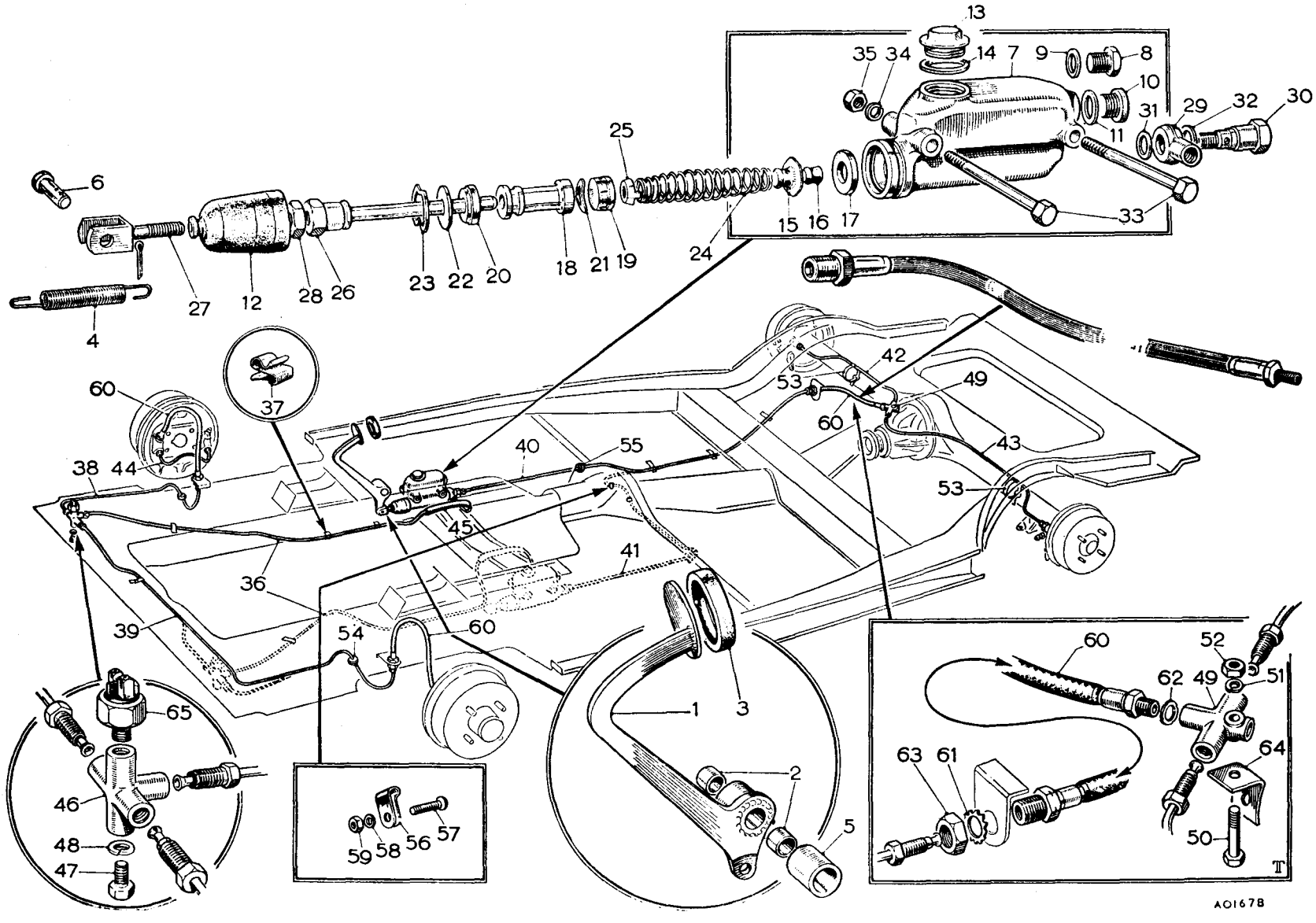

KEY TO ARRANGEMENT OF HYDRAULIC BRAKE SYSTEM

No.	Description
1.	Brake pedal.
2.	Bush for pedal shaft.
3.	Rubber pad.
4.	Return spring.
5.	Spacer.
6.	Clevis pin to master cylinder.
7.	Master cylinder and tank.
8.	Drain plug (earlier).
9.	Gasket (earlier).
10.	Drain plug (later).
11.	Gasket (later).
12.	Rubber boot.
13.	Filler plug.
14.	Gasket.
15.	Body—valve assembly.
16.	Cup—valve assembly.
17.	Washer—valve assembly.
18.	Piston.
19.	Cup—main.
20.	Cup—secondary.
21.	Washer—dished.
22.	Washer for retainer.
23.	Circlip for retainer.
24.	Piston return spring.
25.	Retainer.
26.	Push-rod.
27.	Yoke—push-rod.
28.	Locknut for yoke.
29.	Banjo connection.
30.	Bolt for banjo connection.
31.	Gasket for banjo bolt (small).
32.	Gasket for banjo bolt (large).
33.	Bolt—master cylinder to frame.
34.	Spring washer for nut.
35.	Nut for bolt.
36.	Pipe—master cylinder to three-way front.
37.	Clip—pipe to longitudinal member.
38.	Pipe—three-way to R.H. front.
39.	Pipe—three-way to L.H. front.
40.	Pipe—master cylinder to rear hose.
41.	Pipe—master cylinder to rear hose (L.H.D.).
42.	Pipe—hose to R.H. rear.
43.	Pipe—hose to L.H. rear.
44.	Pipe—cylinder bridge.
45.	Sleeve—pipe protecting (rubber).
46.	Three-way piece (front).
47.	Screw for front three-way piece.
48.	Spring washer for screw.
49.	Three-way piece for rear axle.
50.	Bolt for rear axle three-way piece.
51.	Spring washer for nut.
52.	Nut for bolt.
53.	Strap—pipe to rear axle.
54.	Grommet for front wheel arch.
55.	Grommet for centre cross-member.
56.	Clip—pipe to cross-member.
57.	Screw for clip.
58.	Spring washer for nut.
59.	Nut for screw.
60.	Hose.
61.	Washer.
62.	Gasket.
63.	Locknut.
64.	Bracket for rear hose.
65.	Switch for stop-light.

GENERAL DESCRIPTION

The Lockheed hydraulic brake operating equipment comprises a combined fluid supply tank and master cylinder, in which the hydraulic pressure is generated, and wheel cylinders which operate the brake-shoes. Steel pipe lines, unions, and rubber hoses convey the hydraulic pressure from the master cylinder to each wheel cylinder.

Each brake-shoe on the front wheels has a separate wheel cylinder and thus provides two leading shoes. On the rear wheels a single wheel cylinder, operated both hydraulically and mechanically, floats on the brake-plate and operates the two shoes, giving one leading and one trailing shoe to provide adequate braking in reverse.

MASTER CYLINDER

The master cylinder is mounted on the driver's side of the car underneath the gearbox cover.

Within the cylinder is a piston, backed by a rubber cup, normally held in the 'off' position by a piston return spring. Immediately in front of the cup when it is in the 'off' position is a compensating orifice connecting the cylinder with the fluid supply. This port allows free compensation for any expansion or contraction of the fluid, thus ensuring that the system is constantly filled; it also serves as a release for additional fluid drawn into the system during brake applications. Pressure is applied to the piston by means of the push-rod attached to the brake pedal. The push-rod is adjustable and should have a slight clearance when the system is at rest to allow the piston to return fully against its stop. Without this clearance the main cup will cover the by-pass port, causing pressure to build up within the system and produce binding of the brakes on all wheels. The reduced skirt of the piston forms an annular space which is filled with fluid from the supply tank via the feed hole. Leakage of fluid from the open end of the cylinder is prevented by the secondary cup fitted to the flange end of the piston. On releasing the brake pedal after application the piston is returned quickly to its stop by the return spring, thus creating a vacuum in

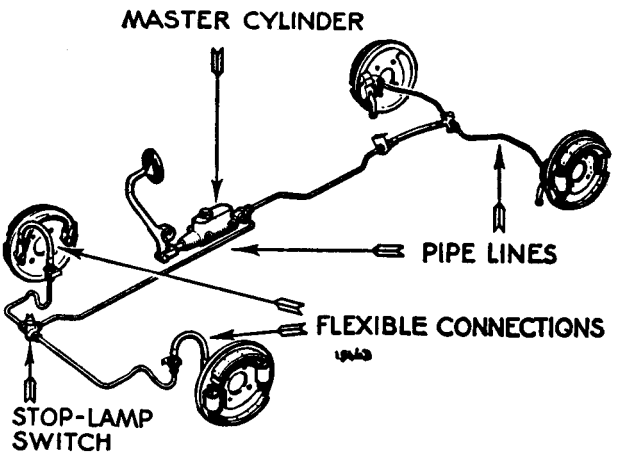

Fig. M.1 (right)
Diagrammatic illustration of the hydraulic brake system of the Morris Minor, showing the relative disposition of the component parts

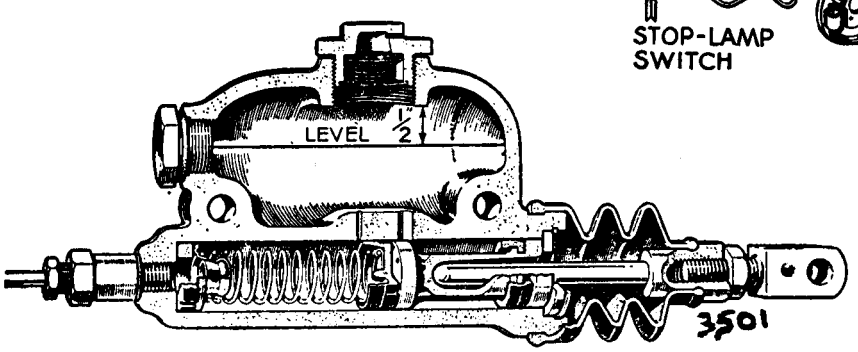

Fig. M.2 (left)
The master cylinder in section, showing its components and construction. The correct level for the hydraulic fluid is also shown clearly

MAINTENANCE

Periodically examine the quantity of brake fluid in the master cylinder. The level should be kept ½ in. (13 mm.) below the bottom of the filler neck, but not higher. The necessity of frequent topping up is an indication of overfilling or a leak in the system which should at once be traced and rectified.

Adjust the brake-shoes to compensate for wear of the linings. For 'PREVENTIVE MAINTENANCE' see Section M.27.

the cylinder; this vacuum causes the main cup to collapse and pass fluid through the small holes in the piston head from the annular space formed by the piston skirt. This additional fluid finds its way back to the reserve supply under the action of the brake return springs, when the system finally comes to rest, through the outlet valve and compensating orifice. If the compensating orifice is covered by the piston cup when the system is at rest pressure will build up as a result of the brake application. The combination inlet and outlet check valve in the head of the cylinder is provided to allow the passage of fluid under pressure from the master piston into the pipe-lines, and controls its return into the cylinder, so that a small pressure of approximately 8 lb./sq. in. (·56 kg./cm.^{2}) is maintained in the pipe-lines to ensure that the cups of the wheel cylinders are kept expanded; it also prevents fluid pumped out from the cylinder when 'bleeding' from returning to the cylinder, thus ensuring a fresh charge being delivered at each stroke of the pedal. The open end of the cylinder is sealed by a rubber boot.

Section M.1

ADJUSTMENT OF THE BRAKE PEDAL

The correct amount of free movement between the master cylinder push-rod and piston is set during the erection of the vehicle and should never need alteration.

In the event of the adjustment having been disturbed, adjust the effective length of the rod connecting the cylinder to the pedal until the pedal pad can be depressed approximately ¾ in. (19 mm.) before the piston begins to move. The clearance can be felt if the pedal is depressed by hand.

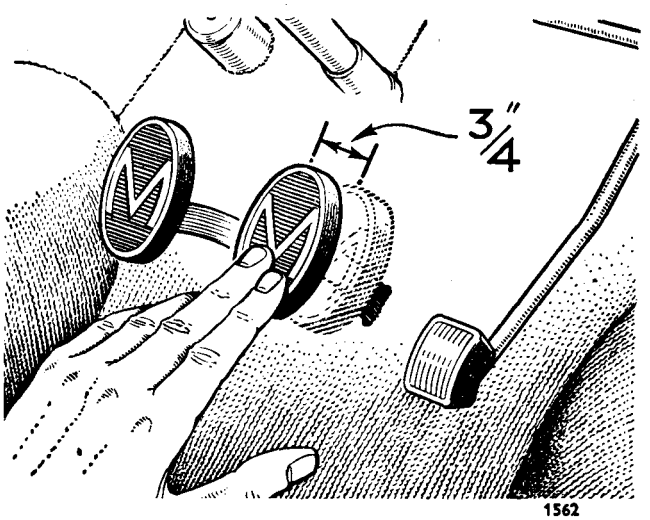

Fig. M.3

There must be ¾ in. (19 mm.) of free movement at the pedal pad before resistance is felt. When this free movement becomes excessive and the pedal can be depressed so that it is close to the floorboard the need for adjustment is evident

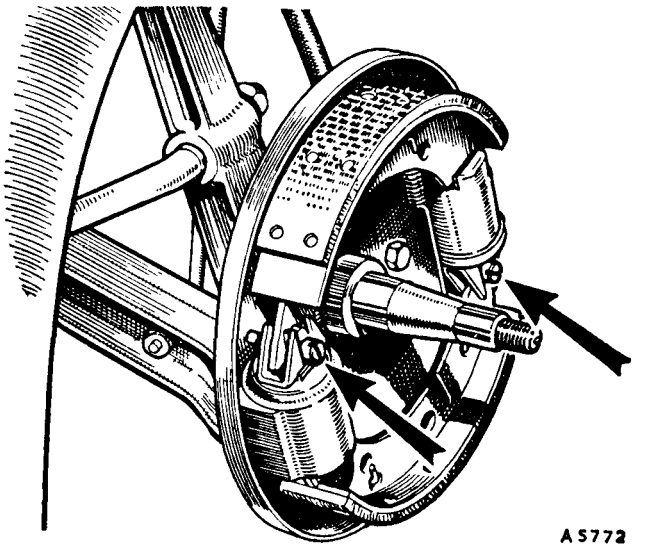

Fig. M.4

The front brake-shoes are adjusted by engaging the adjusting screws with a screwdriver through the holes provided in the brake-drum. There are separate adjusters for each shoe. On some models access to the adjusters can be obtained through a hole in the wheel closed by a rubber plug (see Fig. M.18)

NOTE.—Before making any alteration it is important to ensure that neither the floorboard nor the floor carpet obstructs the pedal and that the piston has not stuck in the cylinder bore. In either case a false impression will be given, even though the adjustment is correct.

Section M.2

BRAKE-SHOE ADJUSTMENTS

When lining wear has reached a point where the pedal travels to within 1 in. (25 mm.) of the floorboards when the brakes are applied heavily it is necessary to adjust the brake-shoes.

Use the special jack provided in the tool kit to raise the wheel which is to be adjusted, placing suitable blocks beneath the wheels remaining in contact with the ground.

Front brakes

Remove the front hub cap and road wheel on earlier models or the rubber plug from the access hole in the wheel disc of later models, then rotate the brake-drum until both adjustment screws are visible through the holes provided in the face of the brake-drum. With a screwdriver turn the screws as far as they will go in a clockwise direction until the drum is locked solid, then

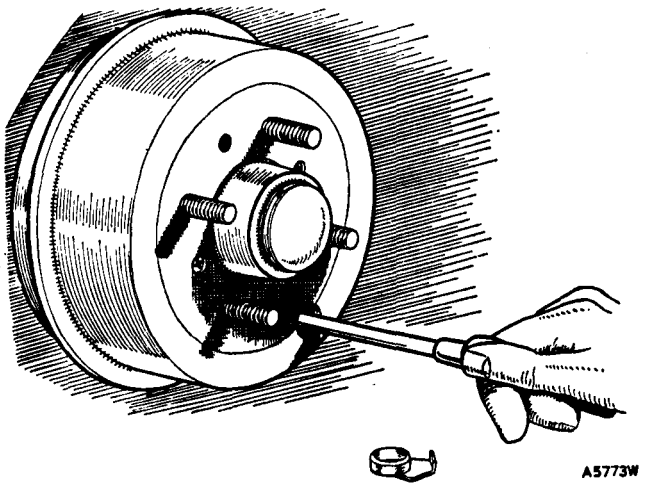

Fig. M.5

The rear brake-shoes are adjusted with a screwdriver through the hole in the brake-drum in a similar manner to the front brakes, but there is only one adjuster for both shoes and this adjusts the hand brake at the same time. Some models are fitted with an access hole in the wheel (see Fig. M.18)

turn them anti-clockwise **one** notch only. The brake-drum should then be free to rotate without the shoes rubbing, and the adjustment on this wheel is complete. The brake-shoes on the other front wheel must be adjusted by the same method.

Rear brakes

The procedure is similar to that detailed for the front brakes except that there is only one adjuster, and this controls both shoes.

Section M.3

TO BLEED THE SYSTEM
(Expel Air)

Bleeding the system is not a routine maintenance job and should only be necessary when some portion of the hydraulic equipment has been disconnected or the fluid drained off.

Fill the master cylinder with Lockheed Super Heavy Duty Brake Fluid (if this fluid is not available an alternative fluid conforming to S.A.E. Specification 70.R3 should be used) and keep it at least half-full throughout the operation, otherwise air will be drawn into the system, necessitating a fresh start.

Attach the bleeder tube to the wheel cylinder bleeder screw and allow the free end to be submerged in a small quantity of fluid in a clean glass jar.

Open the bleeder screw one full turn.

Depress the brake pedal quickly and allow it to return without assistance. Repeat this pumping action with a slight pause before each depression of the pedal.

Watch the flow of fluid into the glass jar, and when air bubbles cease to appear hold the pedal firmly against the floorboards while the bleeder screw is securely tightened.

Repeat the operation on each wheel.

NOTE.—Clean fluid bled from the system must be allowed to stand until it is clear of air bubbles before it is used again. Dirty fluid should be discarded.

Section M.4

REMOVING THE MASTER CYLINDER

Lift out the front carpet and driving seat.

Remove the gear lever knob and rubber cover. Extract the brass bolts securing the floor panel above the gearbox and remove the panel.

Remove the torsion bar from the master cylinder side of the car (see Section K.2).

Remove the two bolts securing the master cylinder in the frame. (Note that they have special heads.)

Detach the return spring and remove the split pin and Belleville washer from the rear end of the clutch operating rod.

Slacken the nut on the clutch pedal lever cotter pin and tap the cotter pin from its seating. Remove the nut and withdraw the cotter pin.

Disconnect the speedometer cable from the gearbox drive.

Withdraw the clutch and brake pedal cross-shaft and lift out the clutch pedal.

Disconnect the front and rear brake supply pipes from the banjo union at the rear of the master cylinder.

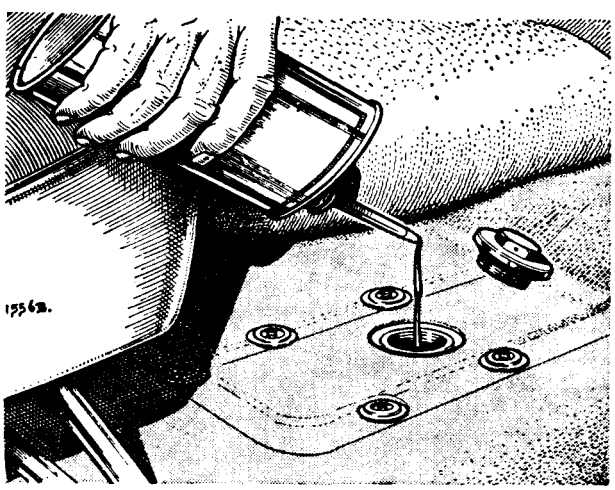

Fig. M.6

The master cylinder filler is accessible for replenishment through the aperture revealed when the carpet in front of the driver's seat is lifted

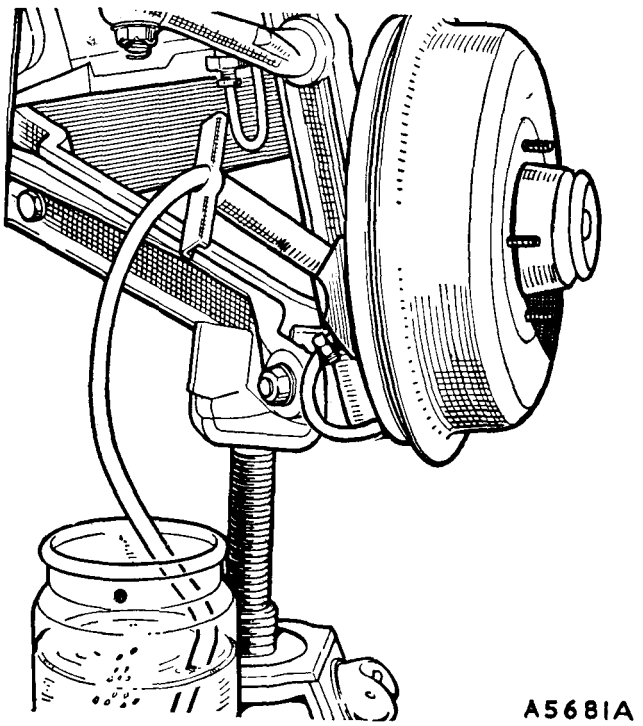

Fig. M.7

The hydraulic system is bled by means of a bleeding tube attached to the bleeder screw nipple. The lower end of the tube is submerged in a glass jar so that the formation of bubbles can be observed

Unhook the brake pedal pull-off spring from the bracket on the frame and lift out the master cylinder and brake pedal assembly.

Release the rubber boot from the master cylinder and withdraw the pedal and push-rod assembly.

Section M.5

DISMANTLING THE MASTER CYLINDER

Remove the filler cap and drain the Lockheed Hydraulic Brake Fluid from the master cylinder.

Remove the union and copper washers.

Push the piston down the cylinder bore and remove the retaining stop washer and circlip.

Remove the remaining internal parts, i.e. the piston. piston master cup, return spring, valve cup assembly. and valve seating washer.

To remove the secondary cup from the piston carefully stretch it over the end flange, using the fingers only.

Section M.6

ASSEMBLING THE MASTER CYLINDER

Clean all parts thoroughly, using Lockheed Hydraulic Brake Fluid for all rubber components. All traces of petrol, paraffin, or trichlorethylene used for cleaning the metal parts must be removed before assembling.

Examine all the rubber parts for damage or distortion. It is usually advisable to renew the rubbers when rebuilding the cylinders.

Dip all the internal parts in brake fluid and assemble them wet.

Stretch the secondary cup over the end flange of the piston with the lip of the cup facing towards the opposite end of the piston. When the cup is in its groove work it round gently with the fingers to make sure it is correctly seated.

Fit the valve washer, valve cup, and body onto the return spring and insert the spring, valve first, into the cylinder. See that the spring retainer is in position.

Insert the master cup, lip first, taking care not to damage or turn back the lip, and press it down onto the

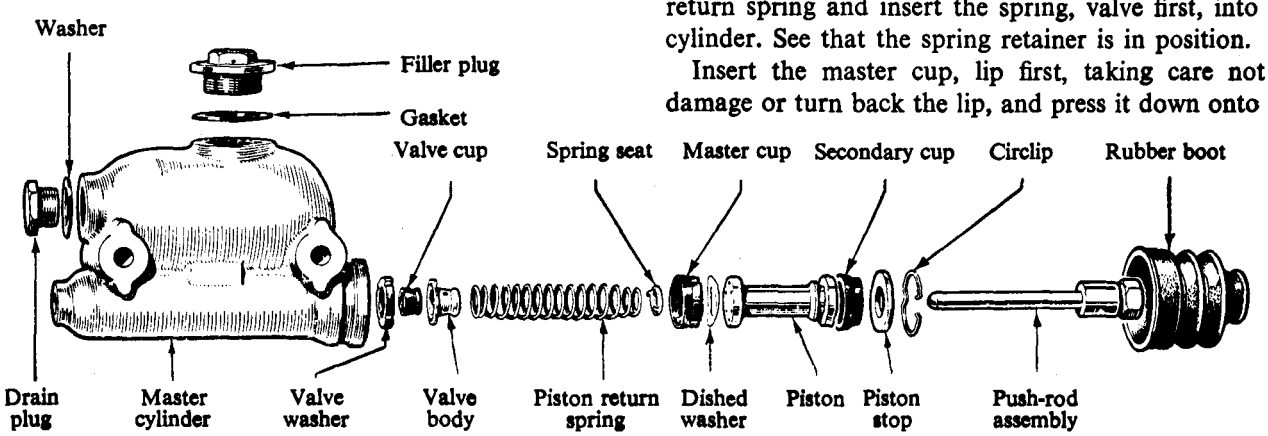

Fig. M.8

The component parts of the master cylinder

NOTE.—Later models have a thin dished copper washer between the end of the piston and the master cup which should be fitted with its convex side against the head of the piston. If this disc is found to be missing when dismantling takes place it is imperative to fit one on reassembly.

spring retainer. **Insert the copper dished washer with its concave side in contact with the cup (see Fig. M.19). If this disc was not present on dismantling it is imperative to fit one on reassembly.**

Insert the piston, taking care not to damage or turn back the lip of the secondary cup.

Push the piston down the bore slightly and insert the retaining washer. Refit the circlip in the groove in the cylinder bore.

Test the master cylinder by filling the tank and by pushing the piston down the bore and allowing it to return; after one or two applications fluid should flow from the outlet.

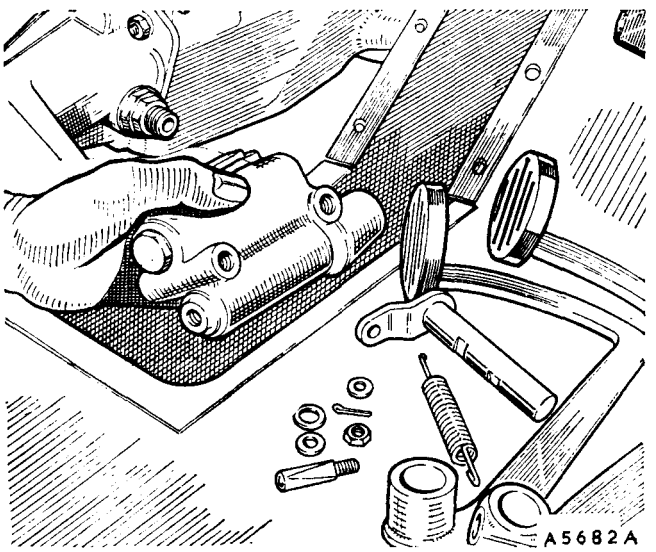

Fig. M.9

Withdrawing the master cylinder from its location under the gearbox cover-plate

Section M.7

REPLACING THE MASTER CYLINDER

The replacement procedure is the reverse of the removal instructions given in Section M.4, with the following additions.

Check the foot pedal as detailed in Section M.1.

Connect the fluid pipes and bleed the system as in Section M.3.

Check the system for leaks with the brakes fully applied. Renew the copper washers on the two-way outlet connection if necessary.

Section M.8

BRAKE ASSEMBLY

Two leading shoes are incorporated in the front wheel braking system and take the greater percentage of the braking load. The rear brakes are of the leading- and trailing-shoe type, giving the advantage of one leading shoe when the brakes are used in reverse.

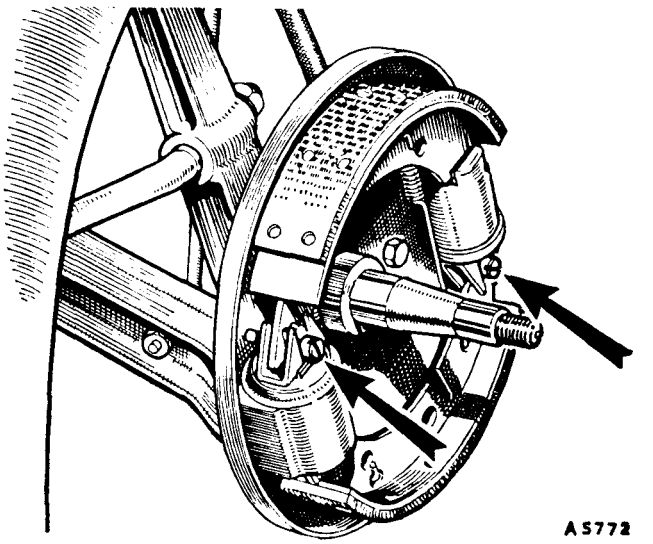

Fig. M.10

Two adjusters are provided on the front brakes, one for each shoe. They are of the serrated snail cam type.

All the shoes have a floating anchorage, each front shoe utilizing the closed end of the other shoe actuating cylinder as its abutment. The two rear shoes share one common abutment stop.

The hand brake lever operates the rear brakes mechanically through a linkage operating on the piston of the rear wheel cylinder, which is made in two halves. The outer half of the piston applies the leading shoes when actuated by a lever pivoted in the cylinder body. The trailing shoe is applied by the movement of the

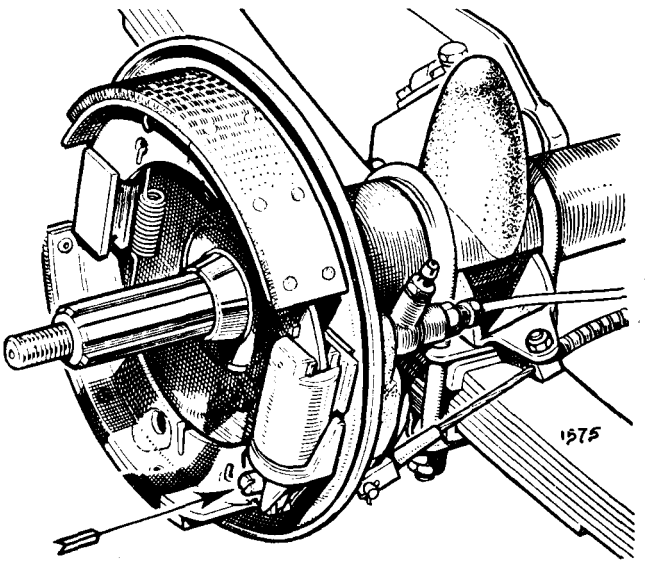

Fig. M.11

The single adjuster on the rear brakes adjusts both shoes simultaneously, including the hand brake

cylinder body, which slides on the backplate as a result of the reaction of the mechanically operated lever on the pivot.

When operated hydraulically the inner half of the piston is forced outwards, carrying with it the outer half, thus applying the leading shoe, and the trailing shoe is applied by the floating cylinder body as a result of the reaction of the fluid pressure on the body.

NOTE.—Under normal circumstances the adjusting nuts at the junction of the hand brake cables to the lever must never be disturbed. No attempt must be made to adjust the hand brake at this point to take up wear. If this is done the pistons in the rear wheel cylinders are displaced and their effective travel reduced, rendering both foot and hand brakes inefficient. Adjustments can only be made at the wheel cylinders.

Section M.9

REMOVING THE WHEEL CYLINDER

Front cylinders

Raise the front of the car and remove the hub cap and road wheel. Remove the brake-drum and hub assembly as detailed in Section K.7.

On later models the brake-drums can be removed independently of the hub assembly (see Section K.17, page K.13).

Draw the brake-shoes apart until the assembly can be lifted from the wheel cylinders and backplate.

Release the flexible hose as detailed in Section M.13. Remove the flexible hose union bolt from the wheel cylinder, observing that the copper washers on either side of the banjo union are of different sizes and that the small washer is next to the cylinder.

Remove the two $\frac{1}{4}$ in. nuts and spring washers securing the wheel cylinder to the backplate and remove the cylinder.

The other cylinder is removed after extracting the $\frac{5}{16}$ in. banjo union bolt and the two bolts securing the cylinder to the backplate.

On later models the flexible hose, bleed screw, and bridge pipe screw directly into the wheel cylinder and no banjo is fitted.

Rear cylinders

Raise the rear of the car and remove the hub cap and road wheel. Remove the brake-drum and hub assembly as detailed in Section H.1.

Draw the brake-shoes apart until the assembly can be lifted from the backplate.

Release the metal feed pipe from the wheel cylinder by undoing the $\frac{3}{16}$ in. union nut. Remove the $\frac{5}{16}$ in. adaptor securing the bleeder screw banjo union to the wheel cylinder, observing that the large copper washer is fitted away from the cylinder.

Remove the clevis pin from the hand brake cable yoke and disconnect the cable from the wheel cylinder lever. Remove the rubber boot and withdraw the lower half of the piston from the wheel cylinder. Extract the wheel cylinder from the backplate.

Section M.10

DISMANTLING THE WHEEL CYLINDER

Rear

Tap out the hand brake lever pivot pin and withdraw the lever. Withdraw the upper half of the piston, the rubber cup, and the bakelite filler.

Later models are fitted with a filler carrying a spiral spring.

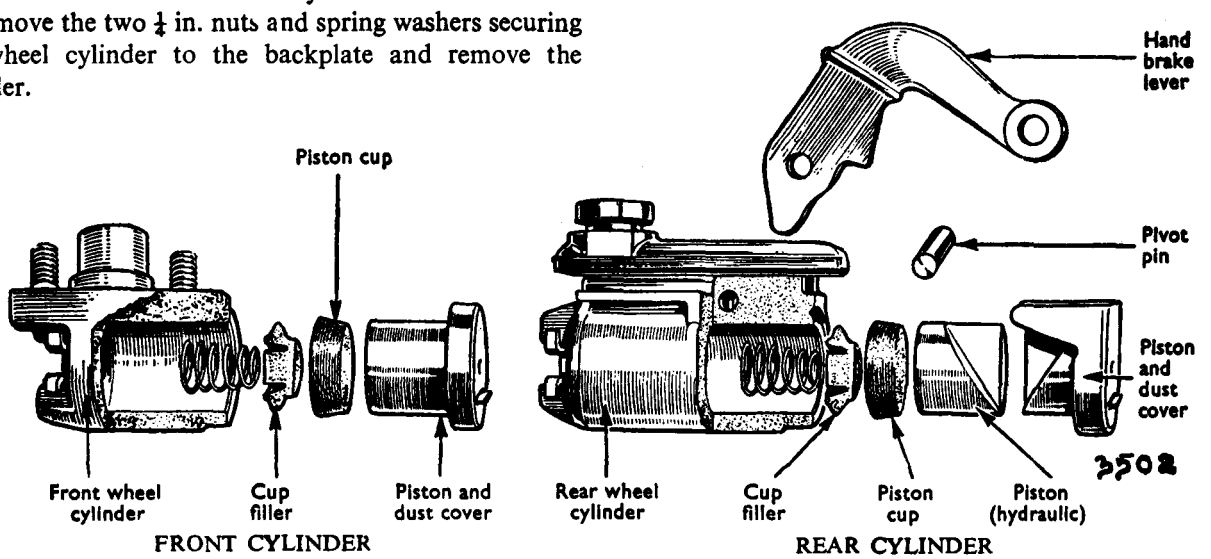

Fig. M.12

The front and rear wheel cylinder components, showing the later-type cup fillers with springs

Front

Withdraw the piston, the rubber cup, and the cup filler.

Later models are fitted with a filler carrying a spiral spring.

Section M.11

ASSEMBLING THE WHEEL CYLINDER

Clean all parts thoroughly, using only Lockheed Super Heavy Duty Brake Fluid for the rubber components. All traces of petrol, paraffin, or trichlorethylene used for cleaning the metal parts must be completely removed before assembly.

Examine the rubber cups for damage, wear, or distortion. Dip all parts in brake fluid and assemble wet.

Insert the cup filler, shallow side first (this is important), and the rubber cup, concave side first.

Replace the piston, and in the case of the rear cylinders insert the hand brake lever and its pivot pin.

Section M.12

REPLACING THE WHEEL CYLINDER

The procedure for replacing the wheel cylinder is a reversal of the sequence of operations given in Section M.9, but attention must be given to the important points detailed below.

Front

The front brake wheel cylinders are interchangeable but the link pipe banjo unions must be fitted to them so that the flexible hose is connected to the forward cylinder and the bleeder screw to the rear cylinder. The link pipe must pass above the backplate.

The brake-shoes are interchangeable but the recessed ends must engage the Micram shoe adjusters and the brake-shoe pull-off springs must be fitted between the shoes and the backplate.

Rear

The wheel cylinder must be fitted on the forward side of the axle casing with the bleeder screw vertical.

The brake-shoes are interchangeable but the recessed end of the lower or leading shoe must engage the Micram shoe adjuster. The other shoe should also be fitted with its recessed end against the wheel cylinder.

The light brake-shoe pull-off spring must be fitted away from the wheel cylinder, and both springs are fitted between the shoes and the backplate.

Section M.13

REMOVING THE FLEXIBLE HOSE

Do not attempt to release the flexible hose by turning either end with a spanner; it should be removed as follows.

Front

Unscrew the metal pipe-line union nut (1) (Fig. M.13) from its connection to the hose.

Remove the locknut securing the flexible hose union to the chassis and unscrew the hose from the wheel cylinder.

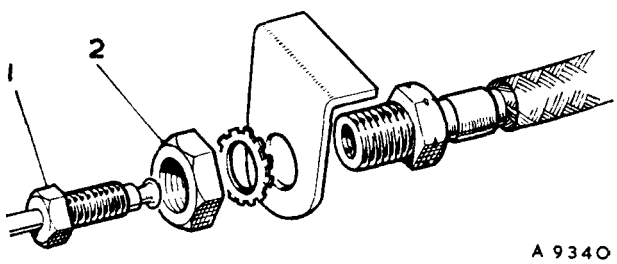

Fig. M.13

The union nut (1) *is the one which must be first unscrewed to release the flexible hose from the pipe-line. The attachment nut* (2) *can then be removed*

The union on the master cylinder side also incorporates the stop lamp switch. Disconnect the two wires from their terminals and with a $\frac{5}{16}$ in. spanner undo the nut to release the switch and the two copper washers fitted either side of the two-way union.

Section M.14

REMOVING AND REPLACING THE BRAKE-SHOES

Remove the rear brake-drum and hub as detailed in Section H.1. Instructions for removing the front brake-drum and hub are given in Section K.7.

Draw the brake-shoes apart until they can be removed from the backplate.

IMPORTANT.—When replacing the shoes the pull-off springs must be between the shoes and the backplate.

The brake-shoes are interchangeable but the recessed end must engage the Micram shoe adjuster on the wheel cylinder.

In the case of the rear brakes the light pull-off spring

is fitted away from the wheel cylinder. The recessed end of the upper or trailing shoe is fitted on the back of the cylinder.

Section M.15

RELINING THE BRAKE-SHOES

Owing to the need for the brake linings to be finished so that they are perfectly concentric with the brake-drums to obtain the best results, relining of the brake-shoes is not satisfactory without special precautions.

If renewal of the brake-shoes and linings is necessary on account of excessive wear or other cause it is most important that the material used for the lining is as specified in 'GENERAL DATA'. Any variations from this will give an unequal and unsatisfactory braking performance.

After riveting the new brake linings to the brake-shoes it is essential that any high-spots should be removed before replacement on the back-plate assembly.

When new shoes and linings are fitted it must be appreciated that considerable adjustment has to be made to the foot brake mechanism, and it is necessary to return the Micram adjusters to their fully anti-clockwise position before attempting to refit the brake-drums over the new linings. The hand brake must also be in the fully released position.

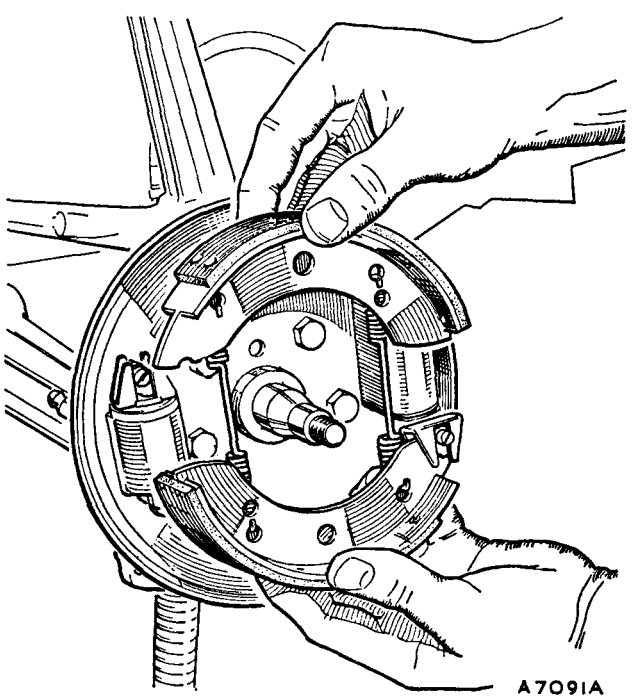

Fig. M.14

Removing the front brake-shoes after releasing a return spring

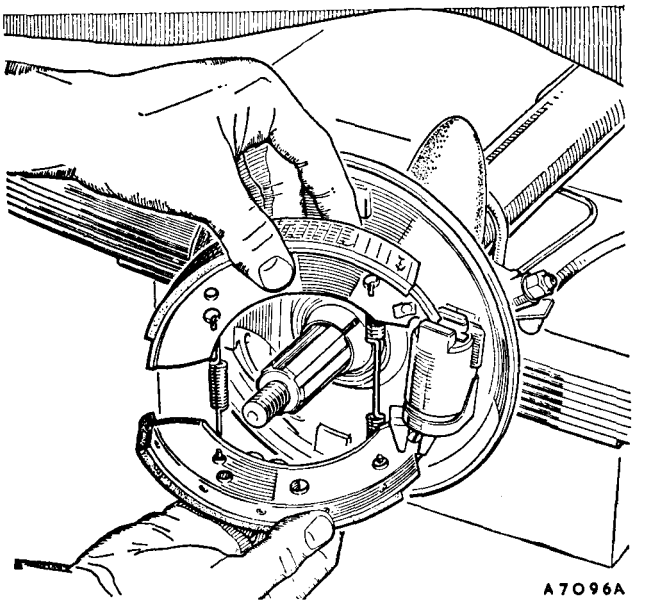

Fig. M.15

Removing the rear brake-shoes after releasing a return spring

IMPORTANT.—Do not use any substitute for Lockheed Super Heavy Duty Brake Fluid as a substitute will seriously affect the working of the system.

Do not allow grease, paint, oil, or brake fluid to come into contact with the brake linings.

Do not clean the rubber parts with a fluid that is not Lockheed Super Heavy Duty Brake Fluid. All traces of petrol, paraffin, etc., used for cleaning metal parts must be removed before reassembly.

Do not reline the brake-shoes with different types of linings as this is bound to cause unequal braking.

Up to Car Nos. 90318 R.H. and 89910 L.H. M19 linings were fitted to the brakes. These and subsequent cars are fitted with MR11-type linings.

Do not allow the fluid in the master cylinder and supply tank assembly to fall below the half-full mark. When full the fluid should be ½ in. (13 mm.) from the bottom of the filler neck, with the brakes in the off position.

Section M.16

BRAKING IRREGULARITIES AND THEIR CAUSES

Pedal travel excessive (requires pumping)

(1) Brake-shoes require adjusting.
(2) Leak at one or more joints.
(3) Master cylinder cup worn.

Pedal feels springy
(1) System requires bleeding.
(2) Linings not bedded in.
(3) Master cylinder fixing loose.
(4) Master cylinder cup worn.

Brakes inefficient
(1) Shoes not correctly adjusted.
(2) Linings not bedded in.
(3) Linings greasy.
(4) Linings wrong quality.
(5) Drums badly scored.
(6) Linings badly worn.
(7) Wrongly fitted cup fillers.
(8) Hand brake cables wrongly adjusted.

Brakes drag
(1) Shoes incorrectly adjusted.
(2) Shoe springs weak or broken.
(3) Pedal spring weak or broken.
(4) Hand brake mechanism seized.
(5) Wheel cylinder piston seized.
(6) Locked pipe line.
(7) Filler cap vent hole choked.

Brakes remain on
(1) Shoes over-adjusted.
(2) No free movement on pedal.
(3) Compensator port in master cylinder covered by swollen rubber cup, or incorrect adjustment of push-rod.
(4) Swollen wheel cylinder cups.
(5) Choked flexible hose.

Unbalanced braking
(1) Greasy linings.
(2) Distorted drums.
(3) Tyres unevenly inflated.
(4) Brake-plate loose on the axle.
(5) Worn steering connections.
(6) Worn suspension linkage.
(7) Different types or grades of lining fitted.

Brakes grab
(1) Shoes require adjusting.
(2) Drums distorted.
(3) Greasy linings.
(4) Broken or loose road spring.
(5) Scored drums.
(6) Worn suspension linkage.

Section M.17

BRAKE SQUEAK

In cases where excessive brake squeak is encountered this trouble may be alleviated by drilling a hole in the brake-shoe flange and making a saw-cut connecting it to the inner radius of the flange in the manner indicated in Fig. M.16.

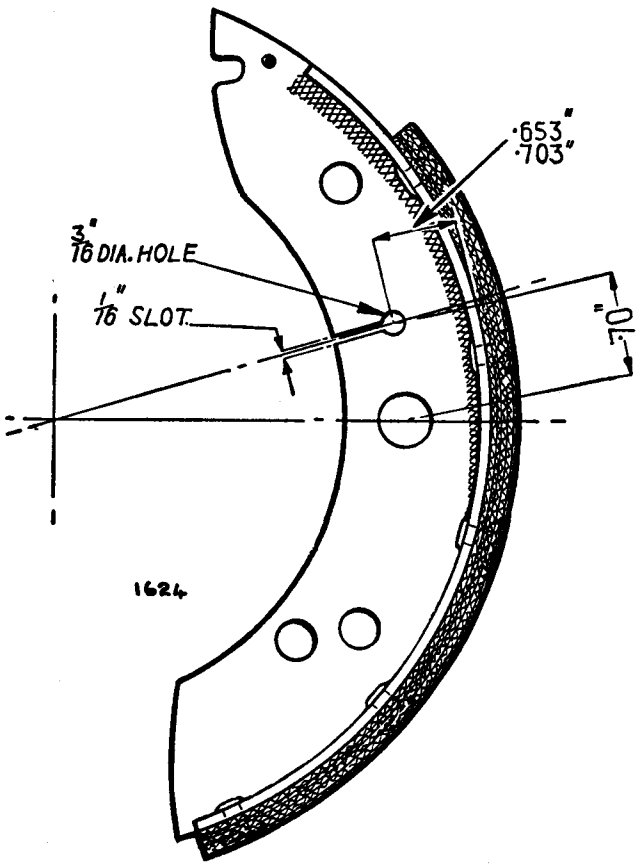

Fig. M.16
The location of the hole and saw-cut in the brake flange which relieves brake squeak

Section M.18

HAND BRAKE

The hand brake is of the central type with the conventional ratchet and pawl locking device. It operates on the rear wheels only by means of cables carried in protective casings. These casings are anchored at their rear ends to the spring brackets, in their centres with clips to the chassis, and at their front ends in the trunnion of the hand brake assembly.

The rear end of each cable engages the end of the brake-shoe actuating lever.

The forward ends of the cables are provided with adjusting nuts which are locked by locking washers of the tab type. They should never be disturbed after initial fitting.

Section M.19

HAND BRAKE ADJUSTMENT

Should the hand brake lack power or the lever show signs of reaching the end of its travel on the ratchet before the brake-shoes come into operation, readjustment is necessary; this will also be indicated by excessive pedal travel.

Raise the rear of the car until both wheels are clear of the ground.

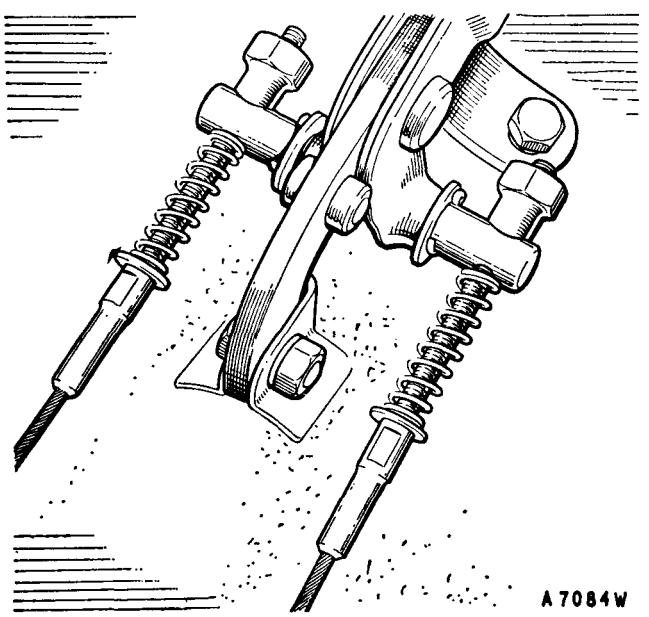

Fig. M.17

The anchorage nuts for the hand brake cables on the hand brake lever trunnion should never be disturbed. Adjustment must normally be made at the brake-shoes

Set the hand brake to the 'off' position and see that the two wheels rotate quite freely.

NOTE.—A slight resistance will be felt on the differential mechanism when turning the wheels by hand.

Remove the wheels and adjust the shoes by means of the adjusting screws as detailed in Section M.2.

Check the hand brake action, and if excessive travel is still present which prevents proper application of the brakes it is probable that the brake-shoe linings are worn or, in exceptional cases, the cables have stretched.

Examine the brake-shoe linings, and if worn renew or reline them if replacement shoes are not available.

If excessive brake lever travel is still present with new shoes or linings it is permissible to take up the excess travel at the hand brake lever trunnion provided the following procedure is strictly adhered to.

First make sure that the shoes are properly adjusted by means of the shoe adjusters as explained in Section M.2. This is most important.

Apply the hand brake until the pawl engages with the third notch on the ratchet, and adjust the nuts at the hand brake lever until it is just possible to rotate the wheel by hand under heavy pressure. It is important that the road wheels offer **equal resistance** in order to get full braking power.

Return the lever to the 'off' position and check that both wheels are perfectly free. If they are not, remove the brake-drum of the brake that tends to bind and check that the brake-shoe pull-off springs are correctly fitted and that the wheel cylinder has not seized. Remove any stiffness present, readjust, and check.

Section M.20

BRAKE FLUID

The correct fluid for replenishment of the hydraulic brake system is Lockheed Super Heavy Duty Brake Fluid for all conditions.

Should Lockheed Fluid be unobtainable, a fluid to Specification S.A.E. 70.R3 must be used.

Section M.21

ACCESS TO BRAKE ADJUSTMENT

In order to facilitate brake adjustment some models are provided with wheels having an access hole in the wheel centre which can be fitted so as to coincide with the adjustment hole in the brake-drum. This obviates removing the wheel to adjust the brakes.

The hole in the wheel centre is normally closed by a rubber plug to provide protection.

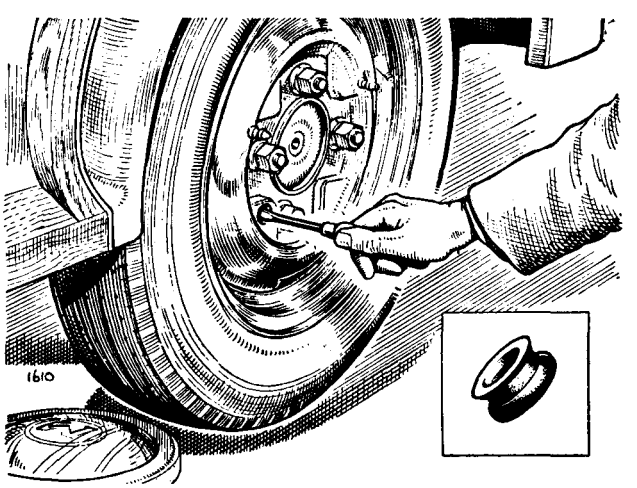

Fig. M.18

The aperture in the wheel on some models which provides easy access to the brake adjustment

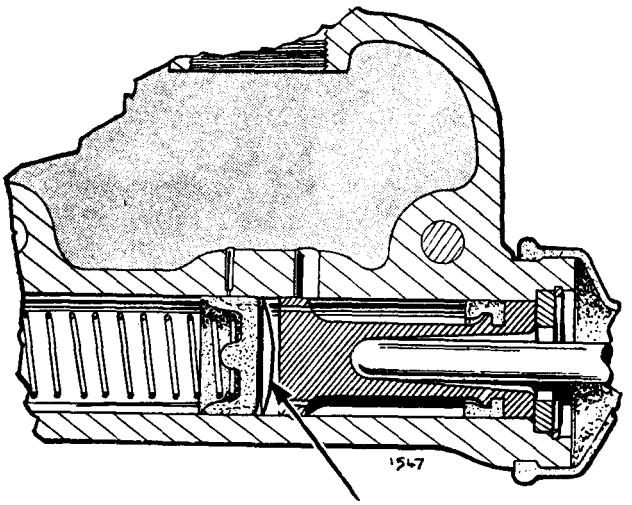

Fig. M.19

The illustration of the master cylinder in part section clearly shows the correct position of the dished washer with its concave side in contact with the main cup

With the introduction of the Minor 1000 a modified wheel (Part No. ACA 8000) was used, eliminating the brake adjustment hole. The wheels must, therefore, be removed when the brakes are adjusted.

Section M.22

MASTER CYLINDER (Later Type)

Later master cylinder assemblies are fitted with a dished copper washer between the piston head and the main cup to ensure that the transfer holes in the piston are kept clear.

The washer must be assembled with its concave side against the main cup and its convex side in contact with the piston if it is to function correctly. **It is imperative that this washer should be fitted to all assemblies.**

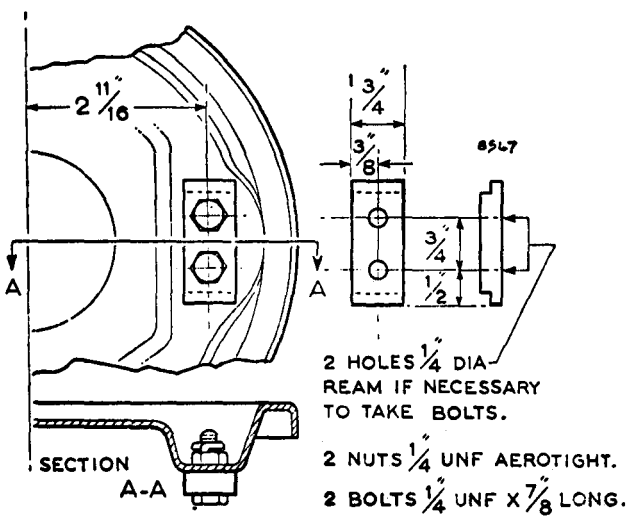

Fig. M.20

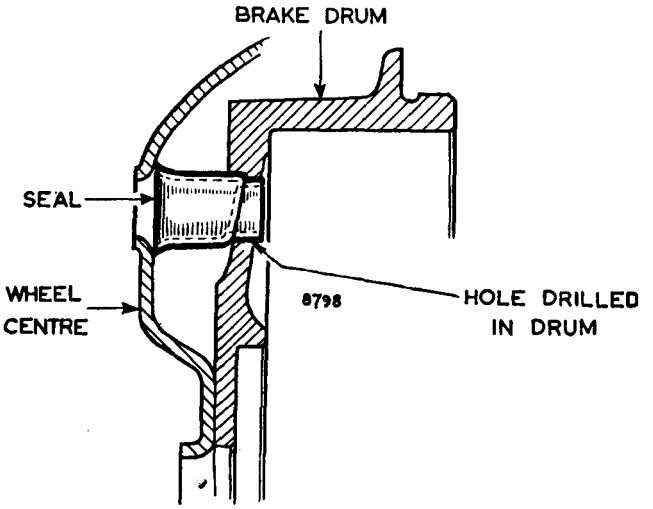

Fig. M.21

Showing the seal held tightly in position by the wheel

Section M.23

REAR BRAKE BACKPLATE ABUTMENT PAD

The rear brake backplate abutment pad is, on later models, being arc-welded along both top and bottom edges. Any of the earlier type which show a tendency to tear away from the backplate should be drilled and bolted into position in the manner shown in Fig. M.20.

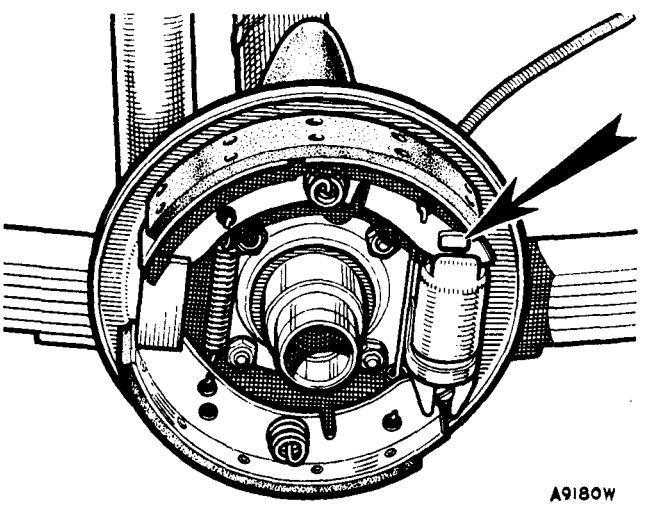

Fig. M.22

The assembly of the rear shoes and springs. Note the shoe identification boss indicated by the arrow. On later models this identification boss is not fitted, but the different positioning of the lining on the trailing (upper) shoe will be noted

Section M.24

BRAKE-DRUM SEALS

From Car No. 228267 seals are fitted in the brake-drum shoe adjusting holes to prevent the ingress of dust and water. The seals (Part No. ACA 5070) are made to fit the oval-shaped holes.

From Car No. 240493 the holes in the brake-drums were changed in shape from oval to round and modified dust seals (Part No. ACA 5102) are fitted.

The seals are securely held in position by the wheel, but care should be taken when removing and refitting a wheel that the seals have not become dislodged.

Section M.25

REMOVING AND REPLACING BRAKE-SHOES (Later Models)

The procedure for removing and replacing the brake-shoes on later models, commencing Car No. 228267, fitted with the standardized 'A' type rear axle and modified front brake-drums and hubs is detailed below.

Rear

Remove the drum as detailed in Section HH.1.

Extract the steady springs; draw the shoes apart and remove them from the back-plate.

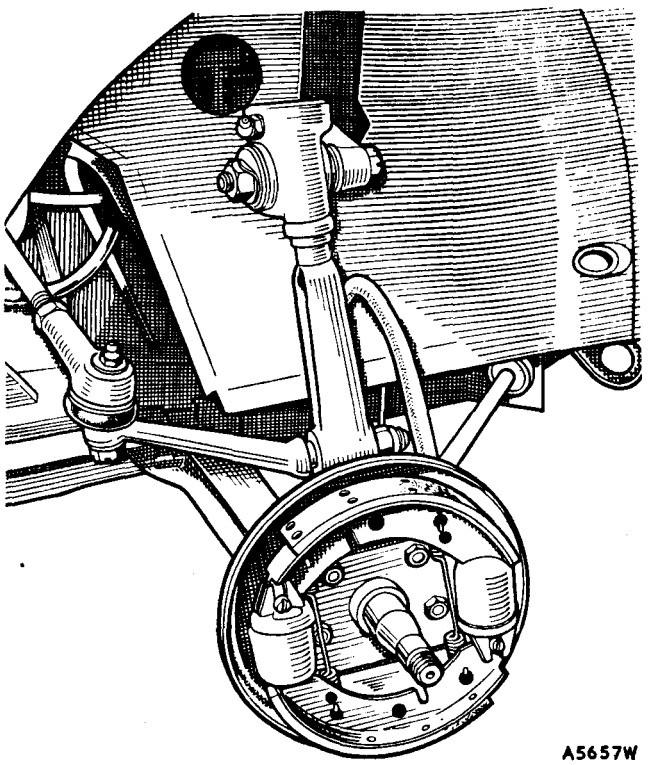

Fig. M.23

A front brake-shoe assembly. Front shoes are interchangeable with the rear leading shoes

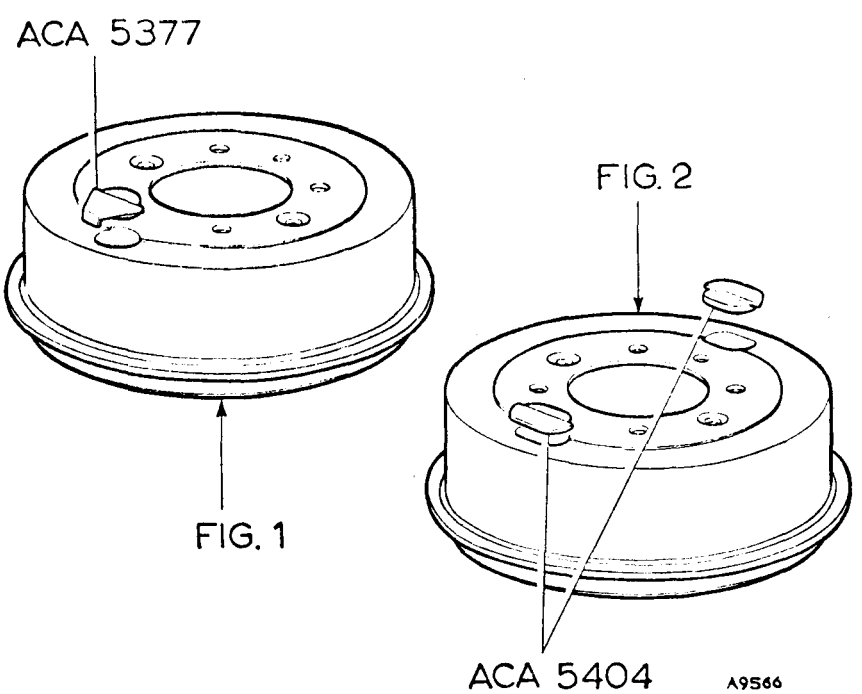

Fig. M.24

The two types of brake-drum seal are clearly shown in this illustration

When replacing the shoes note the following important points.

(1) The trailing shoe is identified by a rectangular boss at one end of the web (Fig. M.22).

(2) The trailing shoe must be fitted uppermost with the identification boss at the cylinder end.

(3) The leading (lower) shoe must be fitted with the recessed end engaged with the Micram shoe adjuster on the wheel cylinder.

(4) Fit the longer spring at the cylinder end of the shoes.

Front

Remove the drum as detailed in Section K.17.

Draw the shoes apart and withdraw them from the back-plate.

The shoes are interchangeable but the recessed end must engage the Micram adjuster on the wheel cylinder.

Section M.26

BRAKE-DRUM DUST SEALS

On later models, and for service purposes, a strengthened road wheel (Part No. ACA 8004) is introduced. The modified wheel has no hole to facilitate brake-shoe adjustment, and it must be removed to carry out this operation.

When fitting the later-type road wheel on earlier cars it will be necessary to fit a dust seal (see Fig. M.24) to the brake adjustment holes in the brake drum in place of the grommet previously used. On no account must the original grommet be used with the modified road wheel as this will prevent the wheel from fitting against the brake-drum.

The new road wheel is completely interchangeable with the original but it is advisable to fit the dust seals to all brake-drums when a new wheel is fitted to eliminate the danger of a road wheel seating incorrectly when a change-round of wheels is made to prolong tyre life.

The part numbers of the new dust seals are as follows:

Dust seal (for brake-drums with oval holes)	ACA 5404
Dust seal (for brake-drums with round holes)	ACA 5377

Section M.27

PREVENTIVE MAINTENANCE

To safeguard against the possible effects of wear or deterioration it is recommended that:

1. Disc brake pads, drum brake linings, hoses, and pipes should be examined at intervals no greater than those laid down in the Passport to Service.
2. Brake fluid should be changed completely every 18 months or 24,000 miles (40000 km.) whichever is the sooner.
3. All fluid seals in the hydraulic system and all flexible hoses should be examined and renewed if necessary every 3 years or 40,000 miles (65000 km.) whichever is the sooner. At the same time the working surface of the pistons and of bores of the master cylinder, wheel cylinders, and other slave cylinders should be examined and new parts fitted where necessary.

Care must be taken always to observe the following points:

(*a*) At all times use the recommended brake fluid.

(*b*) Never leave fluid in unsealed containers. It absorbs moisture quickly and this can be dangerous.

(*c*) Fluid drained from the system or used for bleeding is best discarded.

(*d*) The necessity for absolute cleanliness throughout cannot be over-emphasized.

SECTION N

THE ELECTRICAL EQUIPMENT

GENERAL DESCRIPTION

The electrical equipment is of the 12-volt type incorporating constant voltage control for the charging circuit. The positive-earth system of wiring is employed.

The battery is mounted on the dash under the bonnet and is readily accessible for examination and maintenance attention.

The dynamo is mounted on the right of the cylinder block and driven by endless belt from the engine crankshaft. A hinged mounting enables the belt tension to be adjusted.

The control box should not normally need attention. The fuses are carried in external holders, as are the spare fuses, so that there is no need to remove the control box cover to gain access to them.

The starter motor is mounted on the flywheel housing on the right-hand side of the engine unit and operates on the flywheel through the usual sliding pinion device.

The headlamps on early Home models are of the 'dip and switch' type, in which the left-hand lamp beam is dipped and the right-hand lamp extinguished on operation of the dipping switch. On later Home models and on some Export models the lamps are fitted with double-filament bulbs.

Section N.1

BATTERY

ROUTINE MAINTENANCE

1. Topping up

Remove the filler plugs from the cells and examine the level of the electrolyte in each. Batteries should be topped up with distilled water until the surface of the electrolyte is just above the tops of the separators or separator guard. Do not use tap-water. Do not overfill. Wipe away all dirt and moisture from the top of the battery.

NOTE.—In very cold weather it is essential that the car be used immediately after topping up the battery to ensure that the distilled water is thoroughly mixed with the electrolyte. Neglect of this precaution may result in the distilled water freezing, with consequent damage to the battery.

When examining the cells do not hold naked lights near the vent holes as there is a danger of igniting the gas coming from the plates.

2. Testing the condition of the battery

Occasionally examine the condition of the battery by taking hydrometer readings. There is no better way of ascertaining the state of charge of the battery. The hydrometer contains a graduated float on which is indicated the specific gravity of the acid in the cell from which the sample is taken.

The specific gravity readings and their indications are as follows:

Climates below 27° C. (80° F.)

1·270 to 1·290	Cell fully charged.
1·190 to 1·210	Cell about half-discharged.
1·110 to 1·130	Cell fully discharged.

Climates frequently above 27° C. (80° F.)

1·210 to 1·230	Cell fully charged.
1·130 to 1·150	Cell about half-discharged.
1·050 to 1·070	Cell fully discharged.

These figures are given assuming an electrolyte temperature of 16° C. (60° F.). If the temperature of the electrolyte exceeds this, ·002 must be added to hydrometer readings for each 2·8° C. (5° F.) rise to give the true specific gravity. Similarly ·002 must be subtracted

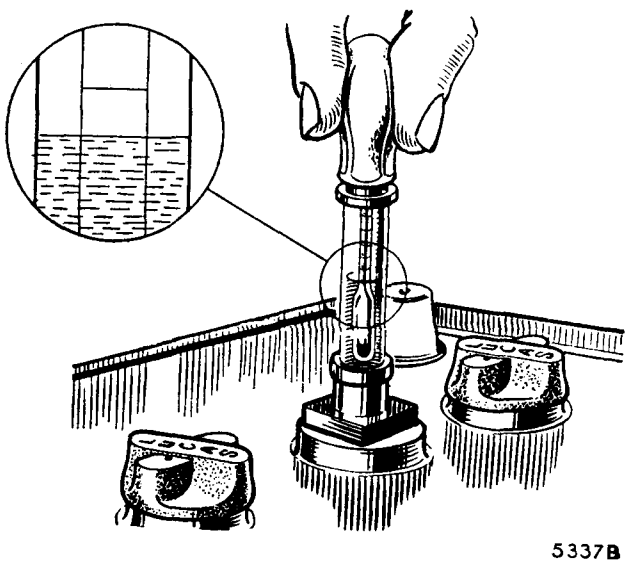

Fig. N.1

When taking hydrometer readings make certain that the float is free, hold the tube vertically, and do not draw in too much electrolyte. The readings must be taken at eye level

from the hydrometer readings for every 2·8° C. (5° F.) below 16° C. (60° F.).

The readings for each of the cells should be approximately the same. If one cell gives a reading very different from the rest it may be that the electrolyte has been spilled or has leaked from one of the cells, or there may be an internal fault. Should the battery be in a low state of charge, it should be recharged by taking the car for a long daytime run or by charging from an external source of D.C. supply at a current rate of 3·5 amps. until the cells are gassing freely.

After examining the battery check the vent plugs, making sure that the air passages are clear, and screw the plugs into position. Wipe the top of the battery to remove all dirt and moisture.

STORAGE

If a battery is to be out of use for any length of time it should first be fully charged and then given a freshening charge about every fortnight.

A battery must never remain in a discharged condition as the plates will become sulphated.

INITIAL FILLING AND CHARGING

1. Preparation of electrolyte

When a new battery has been supplied dry it is necessary to fill the cells with electrolyte of the correct specific gravity.

Batteries having type suffix letter 'W' (e.g. GTW, etc.) are assembled with wet wood separators which have a diluting effect on the filling-in solution. To compensate for this dilution an acid having a higher specific gravity than that of a fully charged battery is required.

Climate	*S.G. of filling acid (corrected to* 16° *C.* [60° *F.*])	*S.G. at end of charge*
Below 27° C. (80° F.) ..	1·340	1·270 to 1·290
Over 27° C. (80° F.) ..	1·290	1·210 to 1·230

All other batteries, including those having type suffix letter 'Z' (e.g. BTZ, etc.) and those having no additional suffix letter (e.g. BT, etc.), are assembled with dry separators. The specific gravity of the filling-in solution for these batteries should be 1·260 for climates below 27° C. (80° F.) and 1·210 for climates frequently above 27° C. (80° F.). For more details of the requirements of 'dry-charged' batteries see Section N.41.

The electrolyte is prepared by mixing distilled water and concentrated sulphuric acid 1·835 S.G. The mixing must be carried out in a lead-lined tank or a suitable glass or earthenware vessel. Steel or iron containers must **not** be used. The acid must be added slowly to the water while the mixture is stirred with a glass rod. **Never add the water to the acid,** as the resulting chemical reaction may have dangerous consequences.

To produce electrolyte of the correct specific gravity use the following proportions of acid and distilled water:

To obtain specific gravity (corrected to 16° *C.* [60° *F*]).	*Add* 1 *part by volume of* 1·835 *S.G. acid to distilled water by volume as below*
1·340	2·0 *parts*
1·290	2·7 ,,
1·260	3·0 ,,
1·210	4·0 ,,

Heat is produced by the mixture of acid and water and the mixture should therefore be allowed to cool before it is poured into the battery, otherwise the plates, separators, and moulded container may become damaged.

2. Filling in and soaking

The temperature of the filling-in acid, battery, and charging room should be above 0° C. (32 ° F.).

Carefully break the seals in the filling holes and half-fill each cell in the battery with dilute sulphuric acid solution of the appropriate specific gravity. The quantity of electrolyte required to half-fill a two-volt cell is ⅜ pint (·5 U.S. pint, ·2 litre).

Allow to stand for at least six hours, then complete the filling of the cells by the addition of more dilute acid of the same specific gravity as before until the level reaches the bottom of the filling holes, and allow the battery to stand for at least another two hours before commencing the first charge.

3. Duration and rate of initial charge

Charge at a constant current of 2·5 amps. until the voltage and temperature-corrected specific gravity readings show no increase over five successive hourly readings. This period is dependent upon the length of time the battery has been stored since manufacture, and will be from 40 to 80 hours, but usually not more than 60.

Throughout the charge the acid must be kept just above the tops of the separators or separator guard in each cell by the addition of acid solution of the same specific gravity as the original filling-in acid.

If, during charge the temperature of the acid in any cell of the battery reaches the maximum permissible temperature, i.e. 38° C. (100° F.) in climates ordinarily below 27° C. (80° F.), 49° C. (120° F.) in climates frequently above 27° C. (80° F.), the charge must be interrupted and the battery temperature allowed to fall at least 5·5° C. (10° F.) before charging is resumed.

At the end of the first charge, i.e. when specific gravity and voltage measurements remain substantially constant, carefully check the specific gravity in each cell to ensure that it lies within the limits specified. If any cell requires adjustment the electrolyte above the plates must be siphoned off and replaced either by acid of the strength used for the original filling in or distilled water, according to whether the specific gravity is respectively too low or too high. After such adjustment the gassing charge should be continued for one or two hours to ensure adequate mixing of the electrolyte. Re-check, if necessary, repeating the procedure until the desired result is obtained.

Section N.2

DYNAMO

Type

The dynamo on early models is a Lucas Model C39PV, Lucas Service No. 22250F. On later models Lucas Model C39PV/2, Lucas Service No. 22258A, is

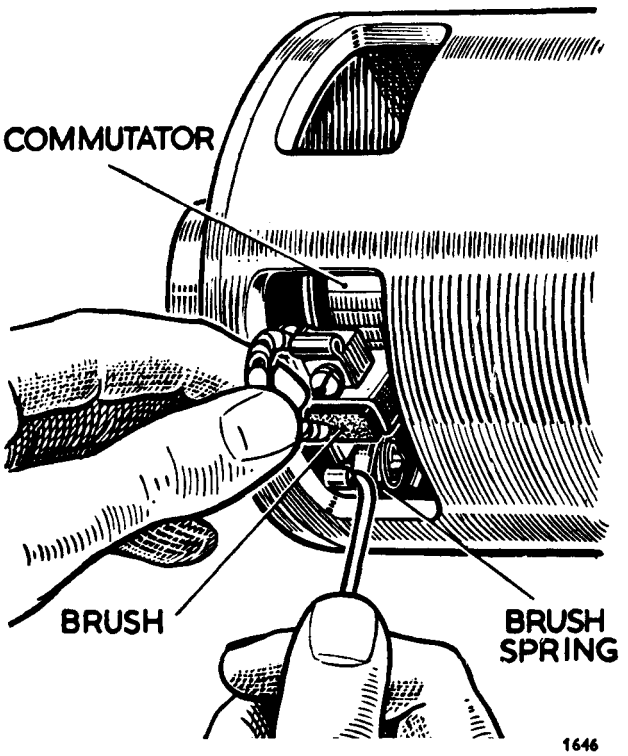

Fig. N.2

To release the brushes hold back the brush spring with a piece of bent wire as shown

fitted. These identification marks are stamped on the yoke. When ordering replacements always quote these numbers.

The cutting-in speed is from 1,050 to 1,200 r.p.m. at 13 dynamo volts.

The output is 17 amps. at 1,800 to 2,000 r.p.m. at 13·5 dynamo volts on early models and at 16 volts on later models, taken on a resistance load of ·8 ohm without regulator.

To test on vehicle

(1) Make sure that belt slip is not the cause of the trouble. The belt should be capable of being deflected approximately ½ in. (13 mm.) at the centre of its run between the pulleys with moderate hand pressure. If the belt is too slack tightening is effected by slackening the two bolts attaching the dynamo end plate extensions to the cylinder head, loosening the bolt attaching it to the slotted adjustment link, and gently pulling the dynamo outwards by hand until the correct tension is obtained. The slotted link bolt must then be tightened, followed by the two upper bolts.

(2) Check that the dynamo and control box are connected correctly. The dynamo terminal 'D' should be connected to the control box terminal 'D' and the dynamo terminal 'F' connected to control box terminal 'F'.

(3) After switching off all lights and accessories disconnect the cables from the terminals of the dynamo marked 'D' and 'F' respectively.

(4) Connect the two terminals with a short length of wire.

(5) Start the engine and set it to run at normal idling speed.

(6) Clip the negative lead of a moving-coil-type voltmeter, calibrated 0–20 volts, to the dynamo terminal and the other lead to a good earthing point on the dynamo yoke.

(7) Gradually increase the engine speed, when the voltmeter reading should rise rapidly and without fluctuation. Do not allow the voltmeter reading to reach 20 volts. Do not race the engine in an attempt to increase the voltage. It is sufficient to run the dynamo up to a speed of 1,000 r.p.m.

If there is no reading check the brush gear.

If the reading is low (approximately 1 volt) the field winding may be faulty.

If the reading is approximately 5 volts the armature winding may be faulty.

(8) Remove the dynamo cover band and examine

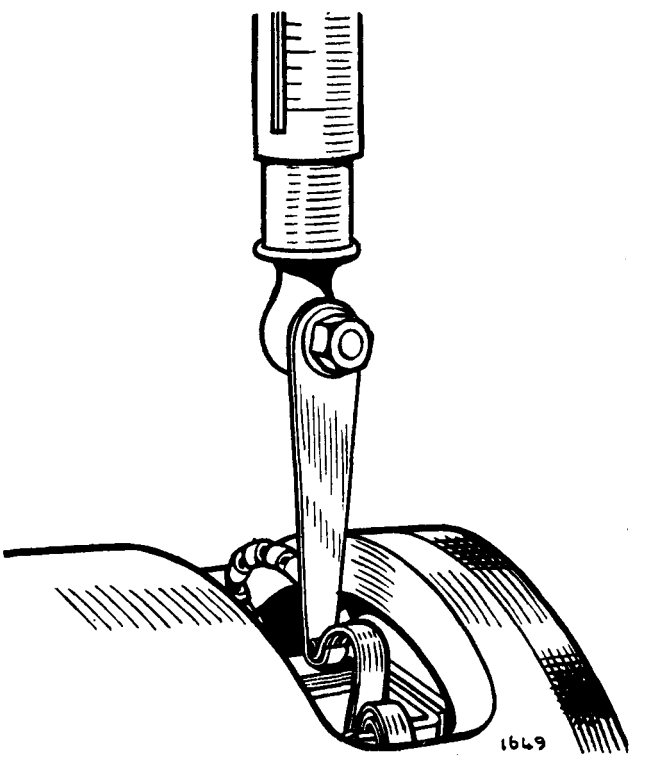

Fig. N.3

Testing the tension of the brush springs with a spring balance (see Section N.5)

the brushes and commutator. Hold back each of the brush springs and move the brush by pulling gently on its flexible connector. If the movement is sluggish remove the brush from its holder and ease the sides by lightly polishing on a smooth file. Always replace brushes in their original positions. If the brushes are worn so that they no longer bear on the commutator, or if the brush flexible has become exposed on the running face, new brushes must be fitted. If the commutator is blackened or dirty clean it by holding a petrol-moistened cloth against it while the engine is turned slowly by hand cranking. Retest the dynamo; if there is still no reading on the voltmeter there is an internal fault and the complete unit should be renewed if a spare is obtainable.

If the dynamo is in good order leave the temporary link in position between the terminals and restore the original connections, taking care to connect the dynamo terminal 'D' to the control box terminal 'D' and the dynamo terminal 'F' to the control box terminal 'F'. Remove the lead from the 'D' terminal on the control box and connect the voltmeter between this cable and a good earthing point on the vehicle. Run the engine as before. The reading should be the same as that measured directly at the dynamo. No reading on the voltmeter indicates a break in the cable to the dynamo. Carry out the same procedure for the 'F' terminal connecting the voltmeter between cable and earth. Finally, remove the link from the dynamo.

If the reading is correct test the control box (see Section N.9).

Section N.3

REMOVING AND REPLACING THE DYNAMO

To remove the dynamo slacken its three attachment bolts and swing the dynamo towards the engine to give maximum belt slackness. Carefully free the belt from the dynamo pulley.

Disconnect the dynamo leads from the dynamo terminals.

Supporting the dynamo, completely remove its attachment bolts, enabling it to be lifted from the engine.

Replacement of the dynamo is an exact reversal of this procedure.

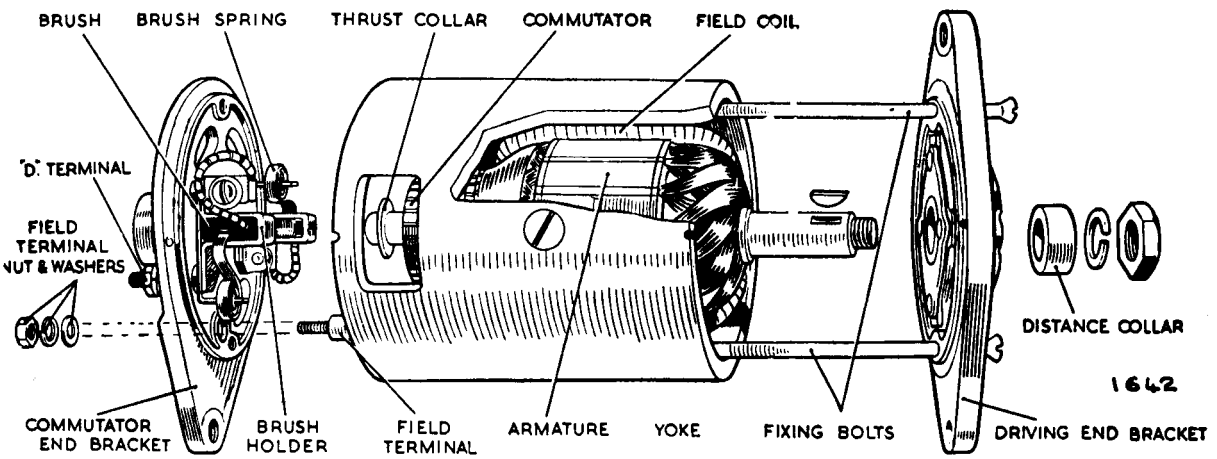

Fig. N.4

The dynamo components

Section N.4

DISMANTLING THE DYNAMO

Take off the dynamo pulley.

Remove the cover band, hold back the brush springs, and remove the brushes from their holders.

Unscrew the locking nuts from the through-bolts at the commutator end.

Withdraw the two through-bolts from the driving end.

Remove the nut, spring washer, and flat washer from the smaller terminal (i.e. field terminal) on the commutator end bracket and remove the bracket from the dynamo yoke.

The driving end bracket, together with the armature, can now be lifted out of the yoke.

The driving end bracket, which, on removal from the yoke, has withdrawn with it the armature and armature shaft ball bearing, need not be separated from the shaft unless the bearing is suspected and requires examination,

in which event the armature should be removed from the end bracket by means of a hand press.

Section N.5

SERVICING THE DYNAMO

Brushes

Test if the brushes are sticking. Clean them with petrol and, if necessary, ease the sides by lightly polishing with a smooth file. Replace the brushes in their original positions.

Test the brush spring tension with a spring scale if available. The correct tension is 20 to 25 oz. (567 to 709 grams). Fit a new spring if the tension is low.

If the brushes are worn so that the flexible is exposed on the running face new brushes **must** be fitted. Brushes are preformed so that bedding to the commutator is unnecessary.

Commutator

A commutator in good condition will be smooth and free from pits or burned spots. Clean the commutator with a petrol-moistened cloth. If this is ineffective carefully polish with a strip of fine glass-paper while rotating the armature. To remedy a badly worn commutator mount the armature (with or without the drive end bracket) in a lathe, rotate at high speed, and take a light cut with a very sharp tool. Do not remove more metal than is necessary. Polish the commutator with very fine glass-paper. Undercut the insulation between the segments to a depth of $\frac{1}{32}$ in. (·8 mm.) with a hacksaw blade ground down to the thickness of the insulator.

Field coils

Test the field coils, without removing them from the dynamo yoke, by means of an ohmmeter. The reading on the ohmmeter should be between 6·0 and 6·3 ohms. If this is not available connect a 12-volt D.C. supply with an ammeter in series between the field terminal and dynamo yoke. The ammeter reading should be approximately 2 amps. If no reading is indicated the field coils are open-circuited and must be

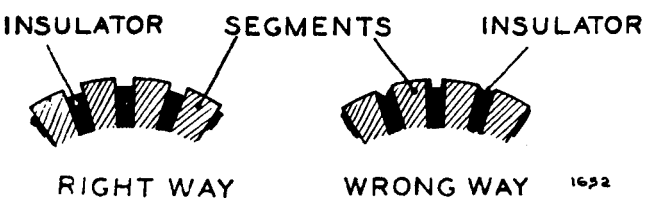

Fig. N.5

The correct method of undercutting the dynamo commutator segments

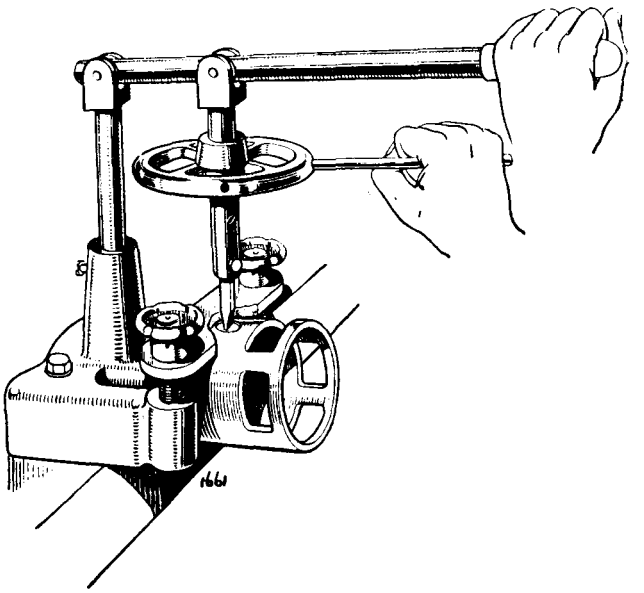

Fig. N.6

The use of a wheel-operated screwdriver is necessary to remove and replace the pole-shoe attachment screws

renewed. To test for earthed field coils unsolder the end of the field winding from the earth terminal on the dynamo yoke and, with a test lamp connected from supply mains, test across the field terminal and earth. If the lamp lights the field coils are earthed and must be renewed.

When replacing field coils carry out the procedure outlined below, using an expander and wheel-operated screwdriver:

(1) Remove the insulation piece which is provided to prevent the junction of the field coils from contacting the yoke.
(2) Mark the yoke and pole-shoes in order that they can be fitted in their original positions.
(3) Unscrew the two pole-shoe retaining screws by means of the wheel-operated screwdriver.
(4) Draw the pole-shoes and coils out of the dynamo yoke and lift off the coils.
(5) Fit the new field coils over the pole-shoes and place them in position inside the yoke. Take care to ensure that the taping of the field coils is not trapped between the pole-shoes and the yoke.
(6) Locate the pole-shoes and field coils by lightly tightening the fixing screw.
(7) Insert the pole-shoe expander, open it to the fullest extent, and tighten the screws.
(8) Finally, tighten the screws by means of the wheel-operated screwdriver and lock them by caulking.
(9) Replace the insulation piece between the field coil connections and the yoke.

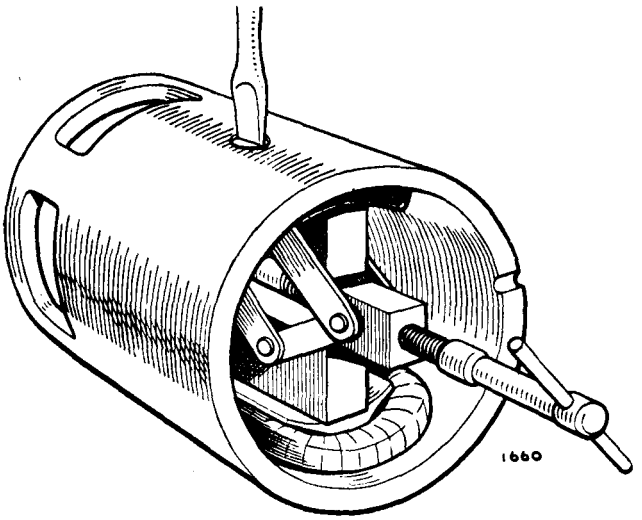

Fig. N.7
To fit the pole-shoes correctly an expander of the type illustrated is required

Armature

The testing of the armature winding requires the use of a voltage drop test and growler. If these are not available the armature should be checked by substitution. No attempt should be made to machine the armature core or to true a distorted armature shaft.

Bearings

Bearings which are worn to such an extent that they will allow side-movement of the armature shaft must be renewed.

To renew the bearing bush at the commutator end proceed as follows:

(1) Press the bearing bush out of the commutator end bracket.

(2) Press the new bearing bush into the end bracket, using a shouldered mandrel of the same diameter as the shaft which is to fit in the bearing.

NOTE.—**Before fitting the new bearing bush it should be allowed to stand completely immersed for 24 hours in thin engine oil to Ref. F (page P.2). This will allow the pores of the bush to be filled with lubricant.**

The ball bearing at the driving end is renewed as follows:

(1) Knock out the rivets which secure the bearing retaining plate to the end bracket and remove the plate.

(2) Press the bearing out of the end bracket and remove the corrugated washer, felt washer, and oil-retaining washer.

(3) Before fitting the replacement bearing see that it is clean and pack it with a high-melting-point grease.

(4) Place the oil-retaining washer, felt washer, and corrugated washer in the bearing housing in the end bracket.

(5) Locate the bearing in the housing and press it home by means of a hand press.

(6) Fit the bearing retaining plate. Insert the new rivets from the inside of the end bracket and open the rivets by means of a punch to secure the plate rigidly in position.

Reassembly

In the main the reassembly of the dynamo is a reversal of the operations described in Section N.4.

Before refitting the dynamo to the vehicle on early models unscrew the lubricator from the commutator end bracket, lift out the felt wick and spring, and half-fill the cap with high-melting-point grease to Ref. D (page P.2). Replace the spring and wick and screw the lubricator into position in the end bracket.

Later models are not fitted with the wick-type lubricator, and before reassembly the felt pad which is fitted between the porous bearing and the oil entry should be lubricated with oil to Ref. D (page PP.2).

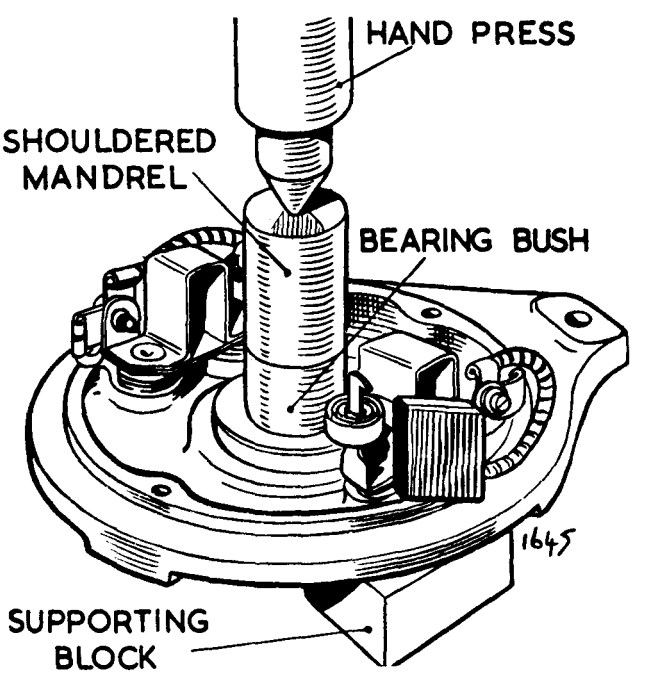

Fig. N.8
The correct method of fitting the bronze bearing bush on the dynamo. Note the supporting blocks

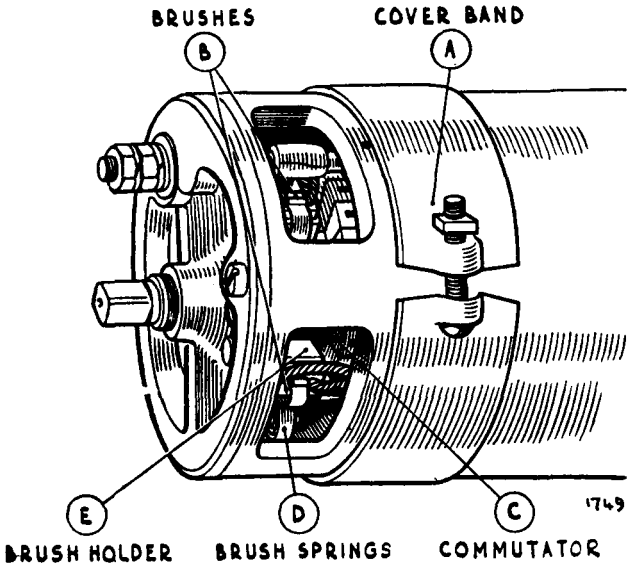

Fig. N.9

The starter brush gear

Section N.6

STARTER

Type

The starter is a Lucas Model M35G, Service No. 25022. These identification marks are stamped on the yoke. When ordering replacements always quote these numbers.

Its lock torque is approximately 9·3 lb. ft. (1·3 kg. m.) with 300 to 350 amps. and 7·5 to 8·0 volts.

To test on vehicle

Switch on the lamps and operate the starter control. If the lights go dim, but the starter is not heard to operate, an indication is given that current is flowing through the starter windings but the starter is meshed permanently with the geared ring on the flywheel. This has probably been caused by the starter being operated while the engine was still running. In this case the starter must be removed from the engine for examination.

Should the lamps retain their full brilliance when the starter switch is operated, check that the switch is functioning. If the switch is in order examine the connections at the battery, starter switch, and starter, and also check the wiring between these units. Continued failure of the starter to operate indicates an internal fault in the starter, and the starter must be removed from the engine for examination.

Sluggish or slow action of the starter is usually caused by a poor connection in the wiring which produces a high resistance in the starter circuit. Check as described above.

Damage to the starter drive is indicated if the starter is heard to operate but does not crank the engine.

Section N.7

REMOVING AND REPLACING THE STARTER

To remove the starter release the starter cable from the starter terminal and unscrew the two bolts attaching the starter flange to the flywheel housing. The starter can the be withdrawn without difficulty.

Section N.8

SERVICING THE STARTER

Examination of commutator and brush gear

Remove the starter cover band (A) (Fig. N.9) and examine the brushes (B) and the commutator (C). Hold back each of the brush springs (D) and move the brush by pulling gently on its flexible connector. If the movement is sluggish, remove the brush from its holder (B) and ease the sides by lightly polishing on a smooth file. Always replace brushes in their original positions. If the brushes are worn so that they no longer bear on the commutator or if the brush flexible has become exposed on the running face they must be renewed.

If the commutator is blackened or dirty clean it by holding a petrol-moistened cloth against it while the armature is rotated.

Dismantling

Take off the cover band (A) (Fig. N.9) at the commutator end, hold back the brush springs (D), and take out the brushes (B) from their holders.

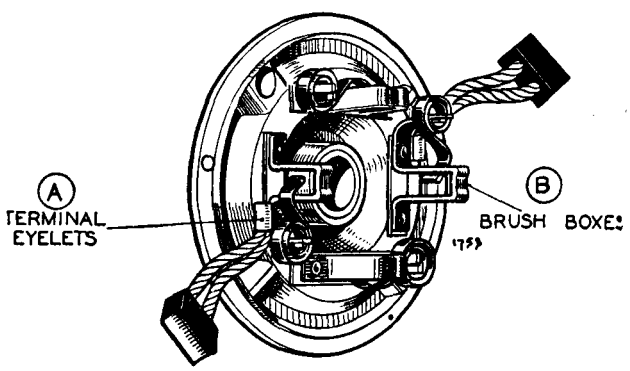

Fig. N.10

The starter end cover

Withdraw the two through-bolts and remove the armature complete with driving end bracket.

Remove the terminal nuts and washers from the terminal post at the commutator end bracket and remove the commutator end bracket.

Brushes

(1) Test the brush springs with a spring scale. The correct tension is 30 to 40 oz. (850 to 1134 grams). Fit a new spring if the tension is low.

(2) If the brushes are worn so that they no longer bear on the commutator, or if the flexible connector has become exposed on the running face, they must be renewed. Two of the brushes are connected to terminal eyelets (A) (Fig. N.10) attached to the brush boxes (B) on the commutator end bracket and two (A) (Fig. N.11) are connected to a tapping (B) on the field coils.

The flexible connectors must be removed by unsoldering and the connectors of the new brushes secured in their place by soldering. The brushes are preformed so that bedding of their working faces to the commutator is unnecessary.

Drive

(1) If the pinion is tight on the screwed sleeve wash away any dirt with paraffin.

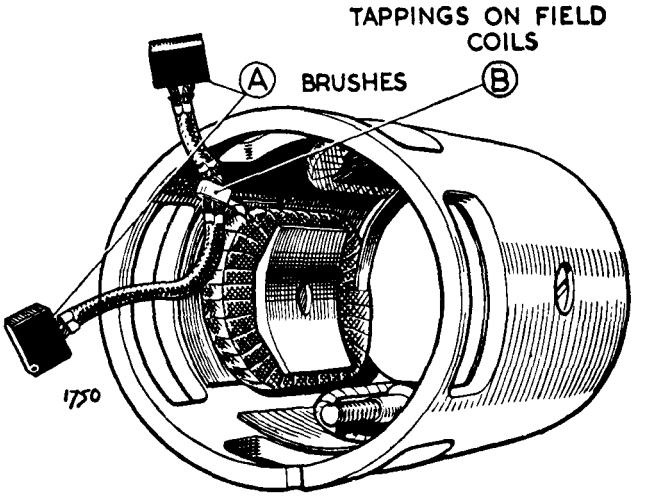

Fig. N.11

The brush connections for the starter

(2) If any parts are worn or damaged they must be renewed.

(3) Remove the cotter pin (H) (Fig. N.12) from the shaft nut at the end of the starter drive. Hold the squared end of the starter shaft at the commutator end by means of a spanner and unscrew the shaft nut (J).

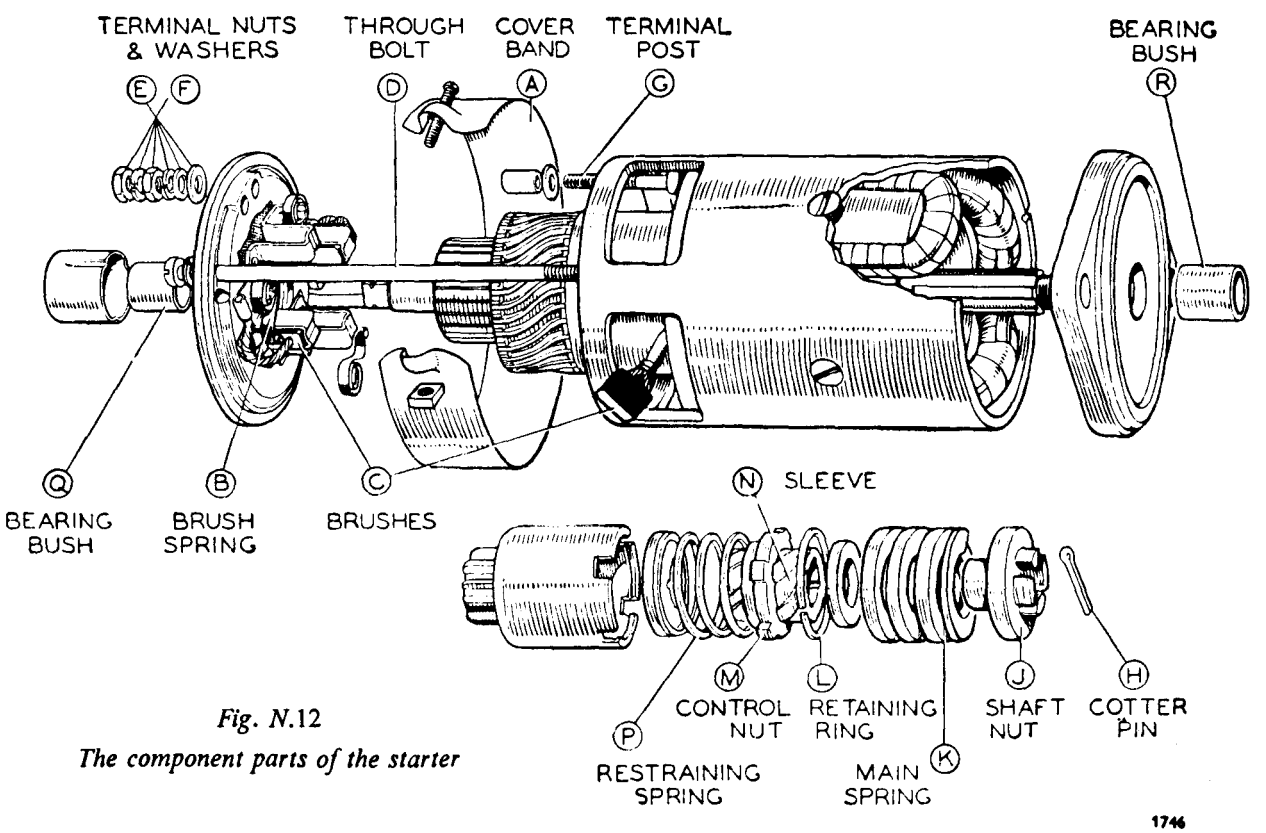

Fig. N.12

The component parts of the starter

(4) Lift off the main spring (K) (Fig. N.12) and remove the retaining ring (L).
(5) The control nut (M), sleeve (N) and restraining spring (P), will now slide off.
(6) Withdraw the splined washer from the armature shaft and remove the pinion and barrel assembly.

Commutator

A commutator in good condition will be smooth and free from pits and burned spots. Clean the commutator with a petrol-moistened cloth. If this is ineffective carefully polish with a strip of fine glass-paper while rotating the armature. To remedy a badly worn commutator dismantle the starter drive as described above and remove the armature from the end bracket. Now mount the armature in a lathe, rotate it at a high speed, and take a light cut with a very sharp tool. Do not remove any more metal than is absolutely necessary and finally polish with very fine glass-paper.

The insulators between the segments on the starter commutator must **not be undercut.**

Field coils

The field coils can be tested for an open circuit by connecting a 12-volt battery, with a 12-volt bulb in one of the leads, to the tapping point of the field coils to which the brushes are connected and the field terminal post. If the lamp does not light there is an open circuit in the wiring of the field coils.

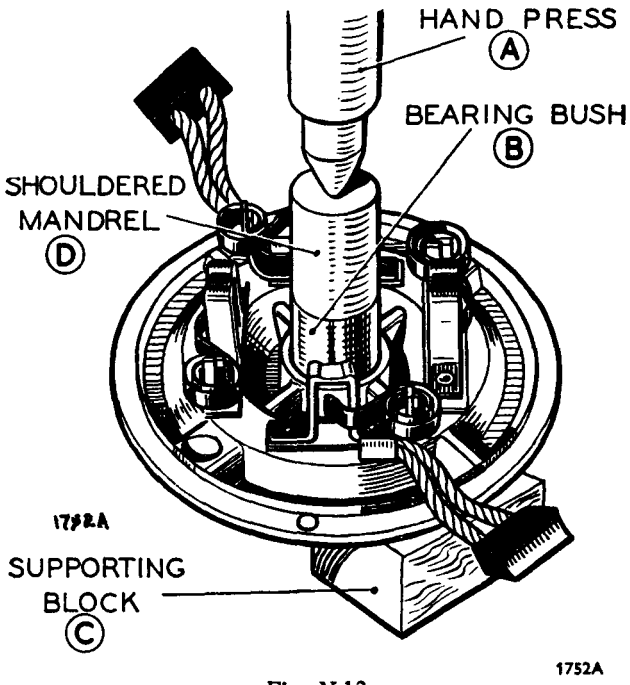

Fig. N.13

The method of inserting a new bush in the starter end cover. Note the use of supporting blocks

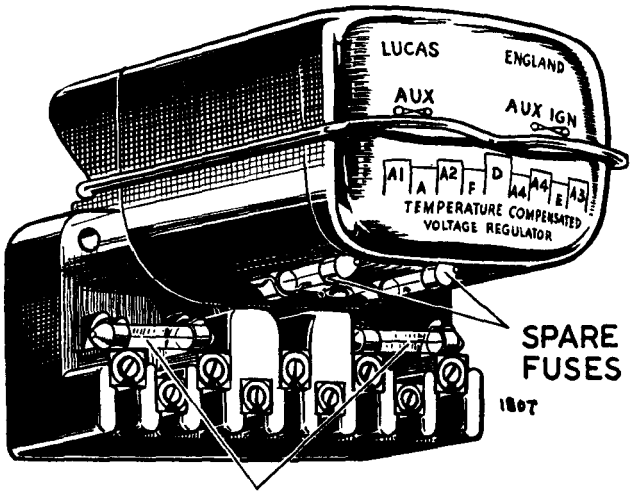

FUSES IN CIRCUITS OF ACCESSORIES

Fig. N.14

The control box, showing the location of the fuses. Some later models are fitted with a separate fusebox

Lighting of the lamp does not necessarily mean that the field coils are in order, as it is possible that one of them may be earthed to a pole-shoe or to the yoke. This may be checked by removing the lead from the brush connector and holding it on a clean part of the starter yoke. Should the bulb now light, it indicates that the field coils are earthed.

Should the above tests indicate that the fault lies in the field coils, they must be renewed. When renewing field coils carry out the procedure detailed for the dynamo (Section N.5).

Armature

Examination of the armature will in many cases reveal the cause of failure, e.g. conductors lifted from the commutator due to the starter being engaged while the engine is running and causing the armature to be rotated at an excessive speed. A damaged armature must in all cases be renewed—no attempt should be made to machine the armature core or to true a distorted armature shaft.

Bearings

Bearings which are worn to such an extent that they will allow excessive side-play of the armature shaft must be renewed. To renew the bearing bush proceed as follows:

(1) Press the bearing bush out of the bracket.
(2) Press the new bearing bush into the end bracket, using a shouldered mandrel of the same diameter as the shaft which is to fit in the bearing.

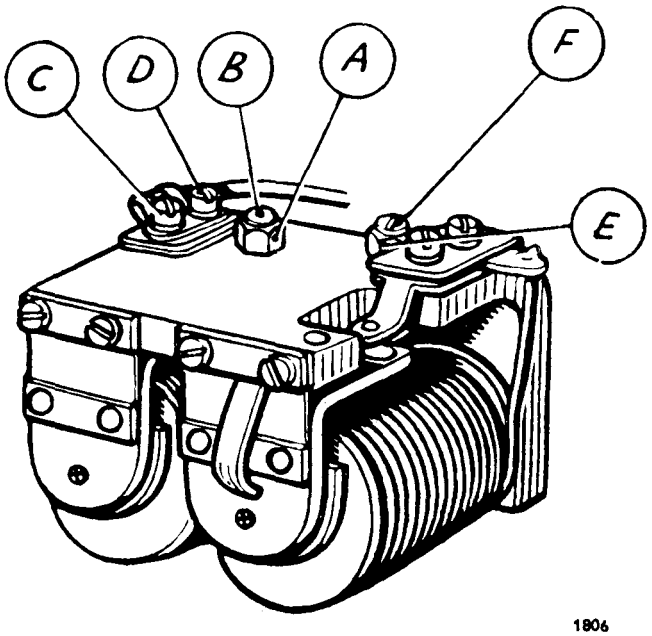

Fig. N.15

The cut-out and regulator assembly

NOTE.—The bearing bushes are of the porous phosphor-bronze type, and before fitting them they should be allowed to stand completely immersed for 24 hours in thin engine oil to Ref. F (page P.2) in order to fill the pores of the bush with lubricant.

Reassembly

The reassembly of the starter is a reversal of the operations described above.

NOTE.—When reassembling the starter drive the locating nut must be recaulked to the armature shaft.

Secure the body of the starter in a vice and test by connecting it with heavy-gauge cables to a battery of the correct voltage. One cable must be connected to the starter terminal and the other held against the starter body or end bracket. Under these light load conditions the starter should run at a very high speed.

Section N.9

CONTROL BOX

Regulator adjustment

The regulator is carefully set before leaving the Works to suit the normal requirements of the standard equipment, and in general it should not be necessary to alter it. If, however, the battery does not keep in a charged condition, or if the dynamo output does not fall when the battery is fully charged, it may be advisable to check the setting and, if necessary, to readjust it.

It is important, before altering the regulator setting, when the battery is in a low state of charge, to check that its condition is not due to a battery defect or to the dynamo belt slipping.

How to check and adjust electrical setting

The regulator setting can be checked without removing the cover on the control box.

Withdraw the cables from the terminals marked 'A' and 'A1' at the control box and join them together. Connect the negative lead of a moving-coil voltmeter (0–20 volts full-scale reading) to the 'D' terminal in the dynamo and connect the other lead from the meter to a convenient chassis earth.

Slowly increase the speed of the engine until the voltmeter needle flicks and then steadies; this should occur at a voltmeter reading between the limits given below for the appropriate temperature of the regulator.

Setting at	10° C.	(50° F.)	16·1 to 16·7 volts
,,	20° C.	(68° F.)	15·8 to 16·4 ,,
,,	30° C.	(86° F.)	15·6 to 16·2 ,,
,,	40° C	(104° F.)	15·3 to 15·9 ,,

If the voltage at which the reading becomes steady occurs outside these limits the regulator must be adjusted.

Shut off the engine, remove the control box cover, and release the locknut (A) (Fig. N.15) holding the adjusting screw (B). The screw turns in a clockwise direction to raise the setting or in an anti-clockwise direction to lower the setting. Turn the adjusting screw a fraction of a turn in the required direction and then tighten the locknut.

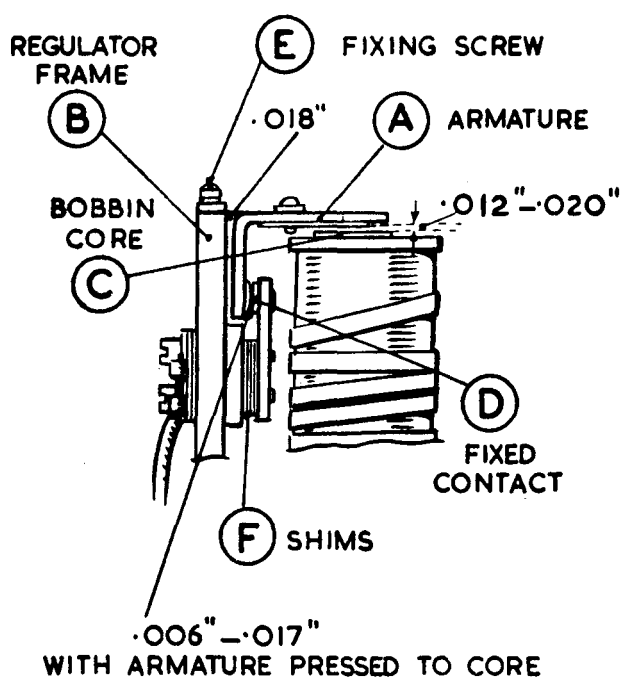

Fig. N.16

The mechanical adjustment for the regulator

When the dynamo is run at a high speed on open circuit it builds up a high voltage. When adjusting the regulator do not run the engine up to more than half-throttle or a false voltmeter reading will be obtained.

Mechanical setting

The mechanical setting of the regulator is accurately adjusted before leaving the Works, and provided that the armature carrying the moving contact is not removed the regulator will not require mechanical adjustment. If, however, the armature has been removed from the regulator for any reason the contacts will have to be reset. To do this proceed as follows:

(1) Slacken the two armature fixing screws (E) (N.16). Insert a ·018 in. (·46 mm.) feeler gauge between the back of the armature (A) and the regulator frame.

(2) Press back the armature against the regulator frame and down onto the top of the bobbin core with the gauge in position, and lock the armature by tightening the two fixing screws.

(3) Check the gap between the under side of the arm and the top of the bobbin core. This must be ·012 to ·020 in. (·30 to ·50 mm.). If the gap is outside these limits correct by adding or removing shims (F) at the back of the fixed contact (D).

(4) Remove the gauge and press the armature down, when the gap between the contacts should be between ·006 and ·017 in. (·15 and ·43 mm.).

Cleaning contacts

To render the regulator contacts accessible for cleaning slacken the screws securing the plate carrying the fixed contact. It will be necessary to slacken the upper screw (C) (Fig. N.15) a little more than the lower one (D) so that the contact plate can be swung outwards. Clean the contacts by means of fine carborundum stone or fine emery-cloth. Carefully wipe away all traces of dirt or other foreign matter. Finally, tighten the securing screws.

CUT-OUT

Adjustment

If it is suspected that the cutting-in speed of the dynamo is too high connect a voltmeter between the terminals marked 'D' and 'E' at the control box and slowly raise the engine speed. When the voltmeter reading rises to between 12·7 and 13·3 the cut-out contact should close.

If the cut-out has become out of adjustment and operates at a voltage outside these limits it must be reset. To make the adjustment slacken the locknut (E) (Fig. N.15) and turn the adjusting screw (F) a fraction of a turn in a clockwise direction to raise the operating voltage or in an anti-clockwise direction to lower the voltage. Tighten the locknut after making the adjustment.

Cleaning

To clean the contacts remove the cover, place a strip of fine glass-paper between the contacts, and then, closing the contacts by hand, draw the paper through. This should be done two or three times, with the rough side towards each contact.

Radio suppression

When it is desired to fit suppressors for radio equipment make sure that this is done only in accordance with recommended practice. Suppressors and capacitors wrongly fitted may cause damage to the electrical equipment.

Section N.10

WINDSCREEN WIPER

Normally the windscreen wiper will not require any servicing apart from the occasional renewal of the rubber blades.

Should any trouble be experienced, first check for loose connections, worn insulation, etc., before dismantling the motor.

To detach the cable rack from the motor and gearbox

Remove the gearbox cover.

Remove the split pin and washer from the crank pin and final gear wheel.

Lift off the connecting link.

Commutator dirty

Remove the connecting leads to the terminals and withdraw the three screws securing the cover at the commutator end. Lift off the cover. Clean the commutator with a cloth moistened with petrol and carefully remove any carbon dust from between the commutator segments.

Brush lever stiff or brushes not bearing on the commutator

Check that the brushes bear freely on the commutator. If they are loose and do not make contact a replacement tension spring is necessary. The brush levers must be free on their pivots. If they are stiff they should be freed by working them backwards and forwards by hand and by applying a trace of thin machine oil. Packing shims are fitted beneath the legs of the brush levers to ensure that the brushes are central and that there is no possibility of the brush boxes fouling the commutator. If the brushes are considerably worn they must be renewed.

Motor operates but does not transmit motion to the spindles

Remove the cover of the gearbox. A push-pull motion should be transmitted to the inner cable of the flexible rack. If the cross-head moves sluggishly between the guides lightly smear a small amount of medium-grade engine oil in the groove formed in the die-cast housing. When overhauling, the gear must be lubricated by lightly packing the gearbox with a grease of the zinc oxide base type.

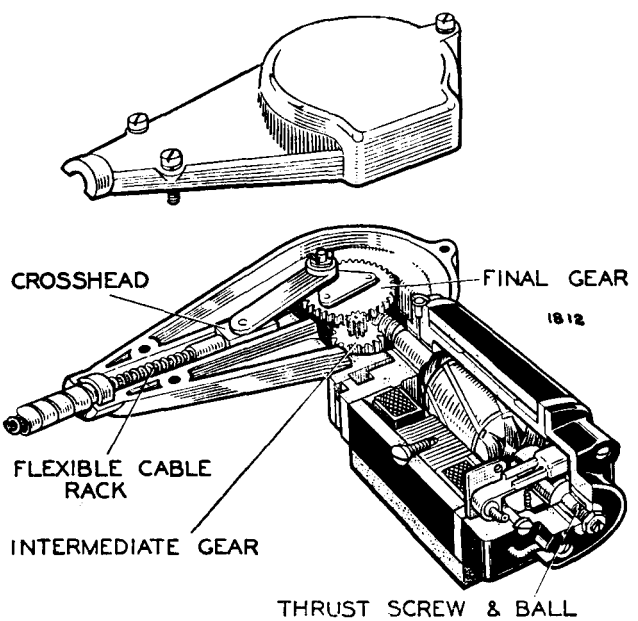

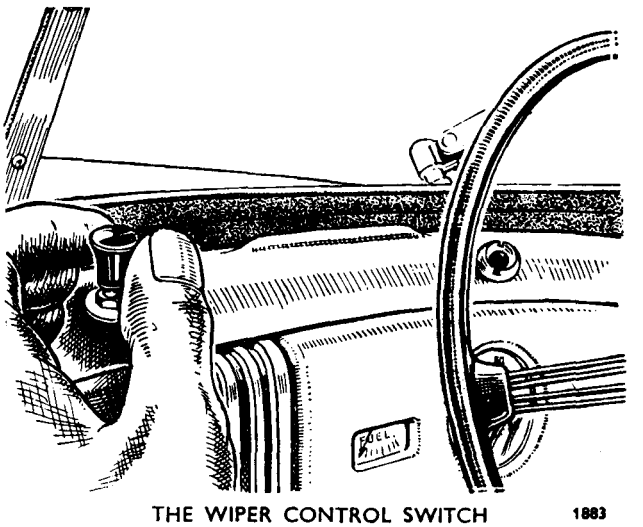

Fig. N.17
The wiper motor and gearbox

Section N.11

FITTING SECOND WIPER ARM

When it is necessary to fit a second wiper arm on the passenger side on Morris Minor models fitted with a single wiper a special Lucas conversion set should be obtained, and this consists of the following:

(1) Inner cable rack, 32⅛ in. (82 cm.) long.
(2) Flexible outer casing (with ferrules at each end).
(3) Wheel box.
(4) Arm and blade assembly.
(5) Rubber grommet for fitting over spindle of wheel box.

In order to fit this conversion set it will be necessary to obtain a wheel box fixing bracket (Morris Motors Part No. 129609).

1. Preparation for fitting

(1) *Removing the instrument panel cover and panel*

Before commencing to fit the additional fittings disconnect the earthing cable from the battery to avoid any possibility of short circuits taking place during assembly.

(*a*) Remove the three wing nuts securing the instrument panel cover and withdraw the cover.

(*b*) Withdraw the three screws with shakeproof washers securing the instrument panel in position.

(*c*) Ease the instrument panel forward and disconnect the leads to the fuel gauge and panel lights and also the cables to the speedometer and oil pressure gauge.

(*d*) Carefully withdraw the instrument panel complete with the rubber sealing ring.

(2) *Removing the glovebox*

(*a*) Open the lid of the glovebox.

(*b*) Remove the glovebox by withdrawing the four screws on the inside edge of the glovebox compartment and removing the two nuts and bolts from the glovebox angle brackets.

NOTE.—Take great care when removing the glovebox fixing screws to see that the glovebox is not damaged.

(3) *Removing the wiper motor, wheel box, and arm and blade assembly*

In order to fit the dual-arm cable assembly it is necessary to remove the cover of the wiper motor and inner cable. The most convenient way

of doing this is to remove the complete motor, wheel box, and arm and blade assembly as follows:

(*a*) Remove the wiper arm and blade assembly by slackening and rotating the fixing screw until the assembly is freed from the wheel box spindle.

(*b*) Remove the two screws securing the wheel box to the car and then remove the wiper motor fixing bracket by withdrawing the four nuts and bolts.

(*c*) Finally, remove the wiper motor complete with wheel box from the car by removing the three nuts securing the wiper motor to the bracket and disconnecting the cables at the wiper motor terminal block.

(*d*) Remove the motor gearbox cover by withdrawing the three securing screws.

(*e*) Remove the split pin and washer from the crank pin and final gear wheel.

(*f*) Lift off the connecting link.

(*g*) Draw the inner cable rack and cross-head from the gearbox.

(*h*) Remove the short length of flexible outer casing from the wheel box (i.e. the portion not connected to the wiper gearbox) by withdrawing the screw securing the clamping bracket.

(4) *Fitting the cable assembly and wheel boxes to the wiper*

This assembly can be carried out on the bench.

(*a*) Fit the new length of flexible outer casing between the wheel boxes.

The new wheel box must be fitted in an inverted position compared to the wheel box on the driver's side, i.e. the cable must pass above the gear in the wheel box.

(*b*) Fit the short length of flexible outer casing to the new wheel box and secure it in position by means of the clamping bracket.

(*c*) Thread the new length of inner cable rack (from the wiper gearbox end) through the outer casing and the two wheel boxes.

(*d*) Refit the connecting link and secure it in position by the washer and split pin.

(*e*) Finally, replace the gearbox cover by refitting the three fixing screws.

(5) *Fitting the wheel box bracket to the passenger side of the car*

(*a*) Remove the five screws securing the lower half of the windscreen beading.

(*b*) Ease the beading away from the body and insert two 2 B.A. bracket fixing screws through the elongated holes now accessible.

(*c*) Fit the bracket in position and secure by tightening the fixing screws.

(*d*) Do not replace the windscreen beading at this stage as it may be necessary to adjust the wheel box with relation to the elongated fixing holes.

2. Fitting wiper and wheel box assemblies to the car

(*a*) A hole is provided for the new wheel box in the body of the car on the passenger's side. Remove the solid rubber bush from the hole and replace by the grommet provided in the kit. Take care to fit the grommet in the same manner as the grommet already fitted to the driver's side.

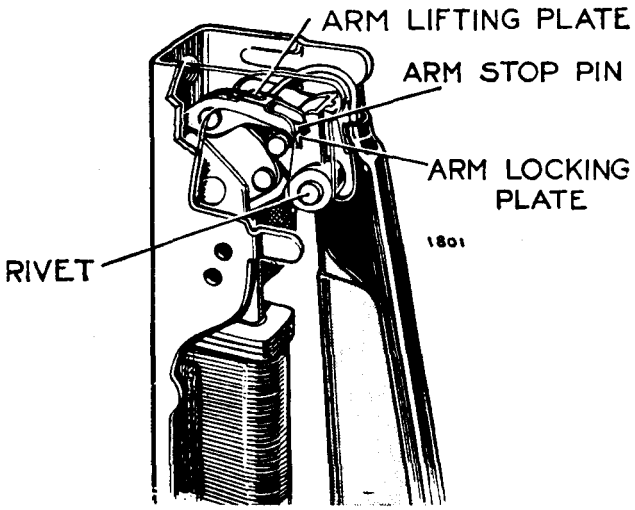

*Fig. N.*18

The trafficator arm hinge mechanism

(*b*) Pass the wiper cable rack and wheel box assemblies behind the dash and temporarily fit the wheel box spindles in position through the rubber grommets.

(*c*) Reconnect the leads to the wiper motor terminal and refit the motor to the fixing bracket.

(*d*) Refit the motor fixing bracket and finally secure the wheel boxes in position by tightening the securing screws.

(*e*) Replace the two wiper arm and blade assemblies (take care to fit them so as to give the maximum angle of wipe).

(*f*) Replace the glovebox, instrument panel, etc., by reversing the procedure of dismantling.

(*g*) Replace the windscreen beading.

(*h*) Reconnect the earthing cable to the battery.

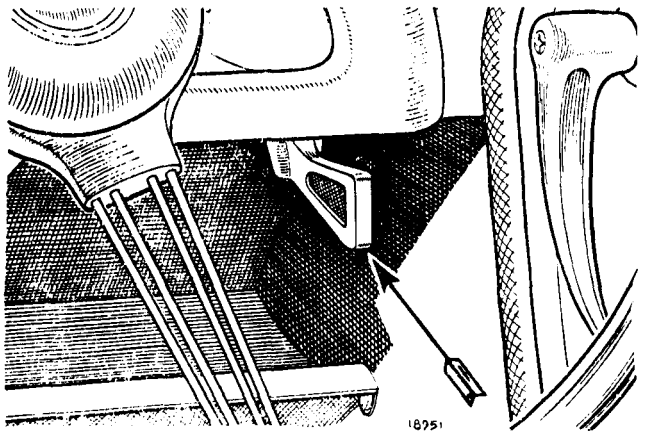

Fig. N.19

The trafficator control switch with central warning light. Four-door saloon models are fitted with an automatic time switch which has no warning light

Section N.12

TRAFFICATORS

REPLACEMENT OF TRAFFICATOR ARM

Removing the trafficator from the car

Lift out the rear seat cushion and squab.

Withdraw the Phillips-head screws securing the rear quarter liner panel.

Unscrew the two Phillips-head screws securing the trafficator and shield to the door pillar.

Lift out the trafficator and disconnect the cable.

Removing the arm

Drill out the rivet securing the arm to the bracket.

Remove the trafficator arm cover and withdraw the cable and bulb. Open out the clip securing the cable to the arm of the trafficator and remove the arm.

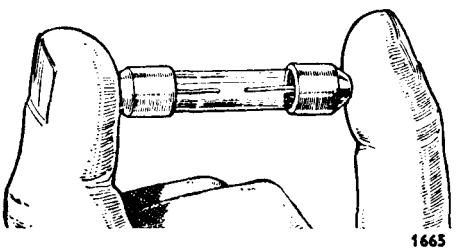

Fig. N.20

The appearance of a burnt-out fuse

Replacement of the arm

Place the new arm in position so that the arm stop pin locates between the arm lifting plate and locking plate (as shown); fit a new rivet.

Remove the arm cover, replace the cable and bulb, and refit the cover. Finally, secure the cable to the arm by means of the clip, taking care to see that the bending over of the clip does not damage the cable or its insulating covering. Make sure also that when the trafficator is operated the cable can move in a wide arc.

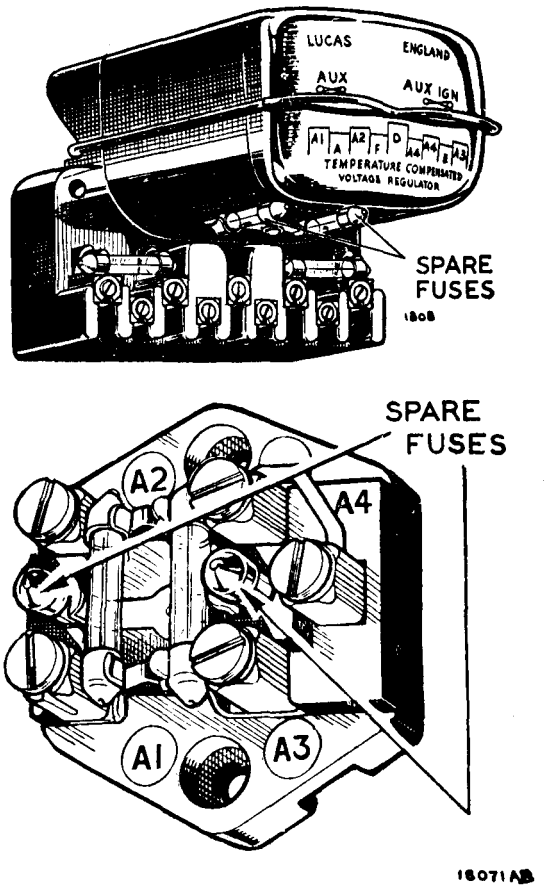

Fig. N.21

Two spare fuses are carried in clips on the under side of the regulator cover on early models and in holders in the separate fusebox on later models

Section N.13

ELECTRIC HORN

All horns before being passed out of the Works are adjusted to give their best performance; no subsequent adjustment is required.

Section N.14

FUSES

The fuses are accessible without removing the cover.

Fuse marked 'AUX' (early models)

Fuse 'A1–A2' (later models)

This fuse protects the accessories which are connected so that they operate irrespective of whether the ignition switch is on or off.

Fuse marked 'AUX IGN' (early models)
Fuse 'A3–A4' (later models)

This fuse protects the accessories which are connected so that they operate only when the ignition is switched on.

Units protected

The units which are protected by each fuse can readily be identified by referring to the wiring diagrams on pages N.23 to N.31.

Blown fuses

A blown fuse is indicated by the failure of all the units protected by it, and is confirmed by examination of the fuse, which can easily be withdrawn from the spring clips in which it fits. If it has blown the fused state of the wire will be visible inside the glass tube. Before renewing a blown fuse inspect the wiring of the units that have failed for evidence of a short circuit or other faults which may have caused the fuse to blow and remedy the cause of the trouble. This is essential, otherwise the new fuse is liable to blow on fitting.

Section N.15

REPLACEMENT BULBS

	BMC Part No.	*Volts*	*Watts*
Combined headlamps (Main), Home (L.H.)	BFS 354 (dip left)	12	42/36
Combined headlamps (Main), Home (R.H.)	BFS 162	12	36
Combined headlamps (Export R.H.D.)	BFS 354 (dip left)	12	42/36
Combined headlamps (L.H.D. except Europe)	BFS 355 (dip right)	12	42/36
Combined headlamps (Europe except France)	BFS 370 (dip vertical)	12	45/40
Pilot lamps (flashing indicator fitted)	BFS 380	12	6/21
Separate headlamps (R.H.D. earlier models)	BFS 414 (dip left)	12	50/40
Separate headlamps (L.H.D. except Europe)	BFS 415 (dip right)	12	50/40
Separate headlamps (Europe except France)	BFS 370 (dip vertical)	12	45/40
Headlamps (Europe except France and Sweden) from Car Nos. 705700 and 696910 (Traveller)	BFS 410 (dip vertical)	12	45/40
Headlamps (France) from Car Nos. 705700 and 696910 (Traveller)	BFS 411 (dip vertical)	12	45/40
Headlamps (Sweden) from Car No. 733180 (all versions)	BFS 410 (dip vertical)	12	45/40
Stop/tail lamps	BFS 380	12	6/21
Pilot and number-plate illumination lamps (single bulb)	BFS 989	12	6
Number-plate illumination lamps (twin bulbs)	BFS 222	12	4
Trafficators	BFS 256	12	3
Panel and warning lights	BFS 987	12	2·2
Direction indicator warning lamp (self-cancelling type)	BFS 280 (Lilliput bulb)	12	1·5
Interior lamp (when fitted)	BFS 989	12	6
Interior lamp (alternative type)	BFS 254 (festoon bulb)	12	6
Flashing indicators (later 10MA models)	BFS 382	12	21

Section N.16

HEADLAMPS

The headlamps are fitted into the radiator cowl on early models and incorporate pilot bulbs in addition to the headlamp bulbs. On later models the headlamps are fitted in the front of the wings, and separate sidelamps are fitted in the radiator cowl.

The design of the headlamp and its holder is such that the bulb is correctly positioned in relation to the reflector and no special attention to focusing is required when a replacement bulb is fitted.

In short, the lamps are similar to the 'sealed-beam' type, except that the bulbs are replaceable.

Anti-dazzle device

Home models with combined head and pilot lamps are equipped with double-filament bulbs in the left-hand headlamp controlled by the dipping switch.

Operation of the dip switch extinguishes the right-hand headlight and simultaneously deflects the left-hand headlight beam downwards and to the left to provide good illumination of the left-hand kerb.

On Export models both headlamps are fitted with double-filament main bulbs and pilot bulbs.

Operation of the dip switch extinguishes the main driving beam in each headlamp and brings the dipping beams into action.

Home models with separate head and pilot lamps

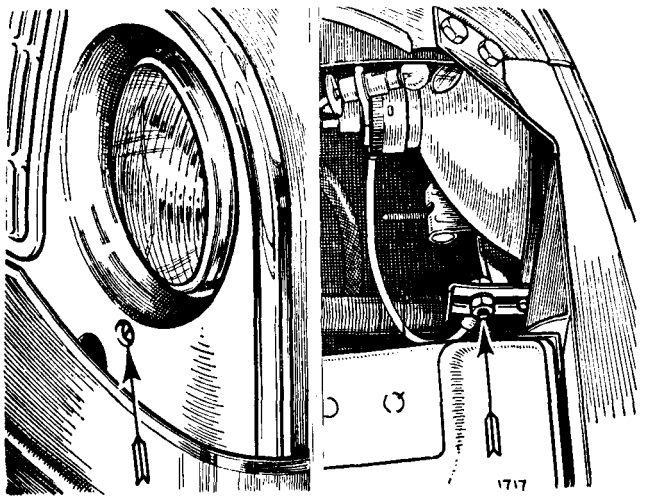

Fig. N.22

The two screws which attach the light unit to the radiator cowl on the earlier models are here shown. The left-hand illustration shows the location of the bottom screw, which passes through the cowl, and the right-hand illustration shows the location of both attachments at the back of the cowl. Note the split pin on the bottom screw, which must be withdrawn before removing the screw

are fitted with dipping mechanism which deflects both beams downwards—to the left on right-hand-drive models and to the right on left-hand-drive models, except in certain Continental countries where vertical dipping is the rule.

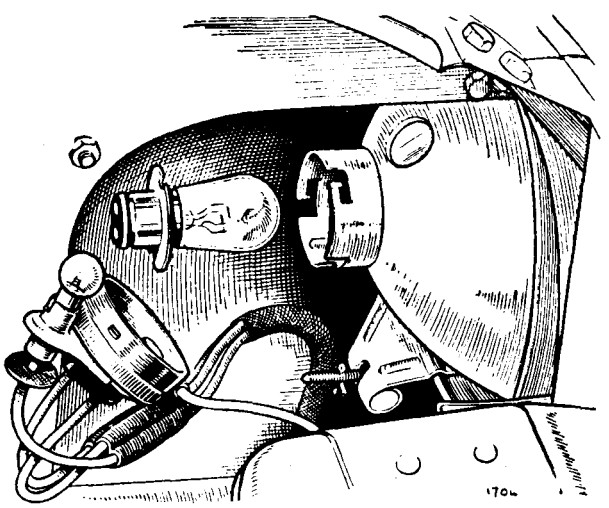

Fig. N.23

Access to the headlamp bulbs for replacement is achieved by withdrawing the pilot lamp carrier from the rear of the light unit and drawing out the headlamp bulb

Certain countries have lighting regulations to which the foregoing arrangements do not conform, and cars exported to such countries have lighting equipment modified to suit the regulations existing in the countries concerned. Cars for use in U.S.A. are examples.

Section N.17

LIGHT UNITS

Each light unit consists of a lamp glass, reflector, and rim, and is suspended between rubber bushes.

The pilot bulb holder on the 'combined' type lamps is attached to the rear of the light unit and provides illumination under the bonnet when the lamps are switched on.

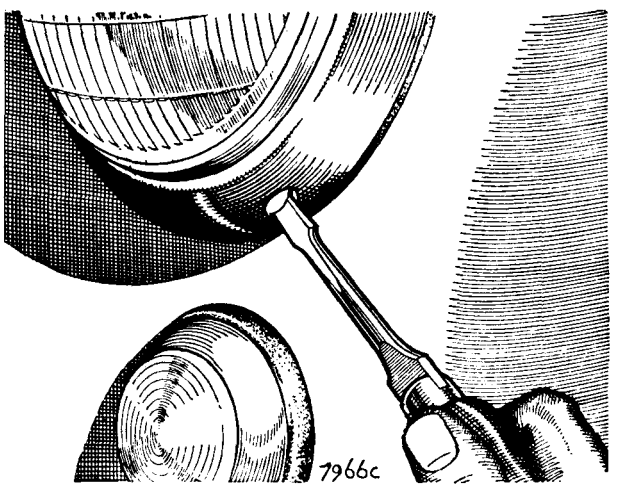

Fig. N.24

On the separate headlamp and pilot lamp equipment the plated lamp rim is released by unscrewing the locating screw on the under side. On early models the screw is in a horizontal position and serves to contract the lamp rim

Section N.18

REMOVING AND REPLACING THE LIGHT UNITS

Combined headlamp and pilot lamp

Remove the split pin from the beam adjustment screw below the reflector and withdraw the screw. Take care not to lose the return spring.

Remove the nut and bolt securing the light unit and earth terminal to the radiator cowl and lift out the light unit assembly.

When replacing the assembly ensure that it engages the rubber mounting correctly, and remember to reconnect the earth terminal.

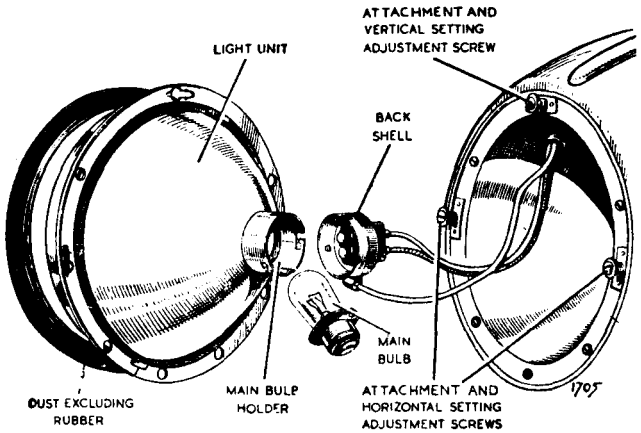

Fig. N.25

The light unit of the separate headlamp equipment withdrawn from its housing in the wing, showing the flanged main bulb and the retaining back-shell. The location of the three spring-loaded attachment screws is also clearly shown

Replace the beam adjustment screw and set the headlamp in accordance with Section N.20.

Separate headlamp and pilot lamps

To remove the light unit for bulb replacement unscrew the screw at the bottom of the plated lamp rim and lift the rim away from the dust-excluding rubber.

Remove the dust-excluding rubber, which will reveal three spring-loaded screws. Press the light unit inwards against the tension of the springs and turn it in an anti-clockwise direction until the heads of the screws can pass through the enlarged ends of the keyhole slots in the lamp rim. On later cars, remove the three inner rim retaining screws and the rim and pull the light unit forward from the back-shell.

This will enable the light unit to be withdrawn sufficiently to give attention to the wiring and bulbs (see Sections N.28 and N.53 for details of pilot lamps).

Section N.19

RENEWING HEADLAMP BULBS

Twist the pilot bulb carrier anti-clockwise and draw it off the reflector. The main bulb can now be withdrawn from its holder complete with its locating flange, which is an integral part of the bulb.

Insert the replacement bulb in the holder, making sure that the slots in the periphery of the bulb engage the projections in the holder.

Press the pilot bulb carrier or end cap into engagement with the holder and twist clockwise.

Section N.20

SETTING THE HEADLAMPS

Each lamp must be set so that the main driving beam is parallel with the road surface, or in accordance with the local regulations.

Combined headlamp and pilot lamp

If adjustment is required this is achieved by turning the screw which is visible below the lamp front. Turn clockwise to raise the beam and anti-clockwise to lower it.

Horizontal adjustment is effected by slackening the bolt and nut securing the light unit in the slotted bracket, moving the reflector in the required direction, and retightening.

Separate headlamp and pilot bulb

If adjustment is required this is achieved by removing the plated rim as indicated in Section N.18.

Vertical adjustment can then be made by turning the screw at the top of the lamp in the necessary direction.

Horizontal adjustment can be effected by using the adjustment screws on each side of the light unit (see Fig. N.28). On later cars, only one horizontal adjustment screw is fitted.

It should be noted that on models fitted with block lenses the lenses fitted on left-hand-drive models are different from those fitted on right-hand-drive models; therefore, when replacement lenses are fitted care should be taken to ensure that they are of the correct type.

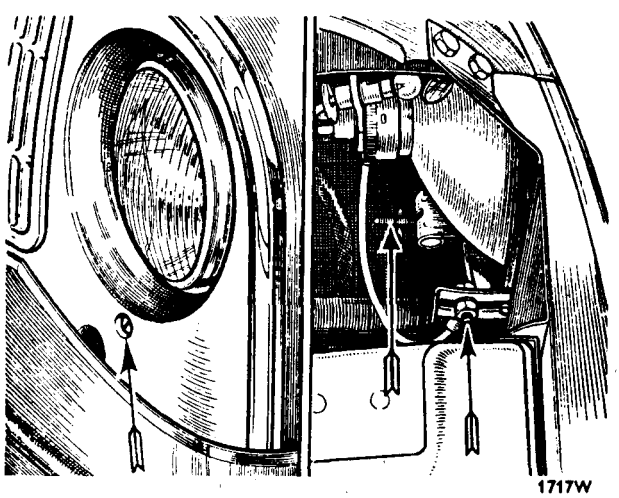

Fig. N.26

On the combined headlamp and pilot lamp equipment the headlamp beam is adjusted by means of the two light unit attachments. That in front of the radiator mask sets the vertical adjustment and that in the slotted plate under the bonnet the horizontal adjustment

Section N.21

CLEANING LAMPS

Chromium-plated surfaces must be washed frequently with plenty of water, and when the dirt is completely removed they may be polished with a chamois-leather or soft dry cloth.

Do not use metal polishes on chromium plating.

Section N.22

TAIL AND STOP LAMP

Twin tail lamps are fitted to all models except the very early ones produced for the Home market. The double-filament Lucas No. 361, 12-volt, 6/18-watt bulbs give a marked increase in brilliance when the brakes are applied.

NOTE.—The bulbs are marked to show which filament must be at the top when they are fitted in their holders. If they are fitted incorrectly a bright light will be visible all the time and will not increase when the stop switch comes into operation. The dim light is the correct one for the tail lamp.

To ensure that bulbs are fitted correctly later models are fitted with a modified tail lamp using a special bulb which can only be fitted one way.

To obtain access to the bulbs on models fitted with round tail and stop lamps remove the central screw securing the lamp glass in position and remove the glass.

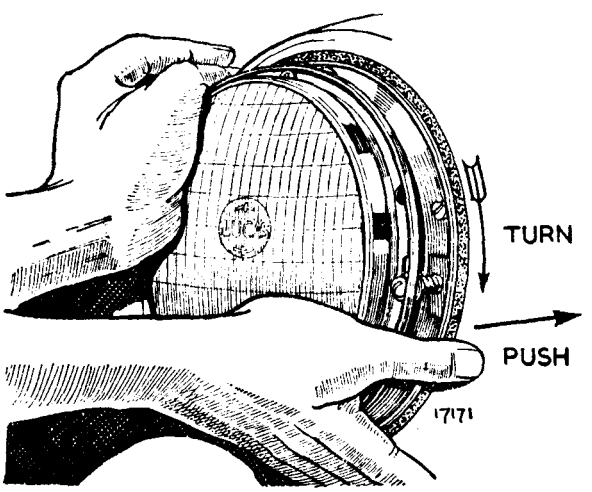

Fig. N.27

When removing or replacing the light unit on the earlier separate headlamp and pilot lamp equipment it must be pushed towards the wing to compress the springs of the attachment screws. The action of replacing the light unit is here shown. Removal is effected by rotation in the opposite direction

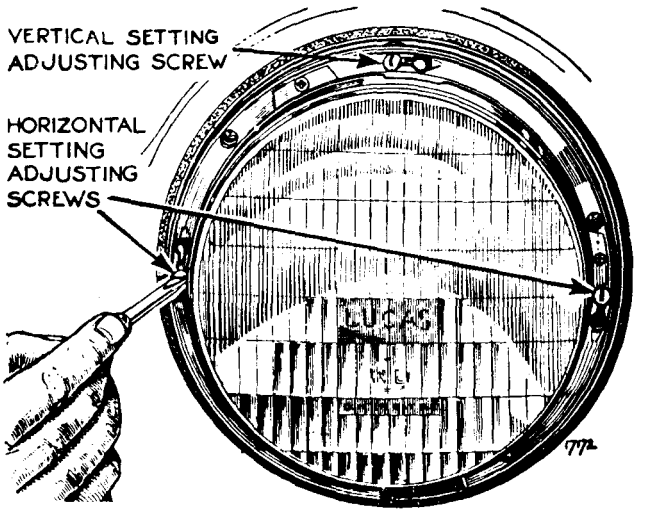

Fig. N.28

On the earlier separate headlamp and pilot lamp equipment the headlamp beams are set by means of the spring-loaded attachment screws locating the light unit

Move the glass-retaining stirrup to one side and remove the bulb from the bayonet-type holder by depressing and giving it a twist to the left.

Circular lamps without a central screw have the glass and plated rim held in the moulded rim of the rubber surround, from which they can be prised without difficulty.

In the case of shield-type lamps access to the bulb is obtained by unscrewing the two screws attaching the plated rim to the rear wing, thus releasing the moulded glass assembly.

To ensure proper earthing for the tail lamps a long bolt is now used each side for securing the wing and rear bumper bracket, with an additional nut for securing the earthing tag instead of relying on a single nut.

Section N.23

NUMBER-PLATE ILLUMINATION

The number-plate is illuminated by a separate lamp with two miniature bayonet-fitting bulbs.

The cover is removed by unscrewing the single attachment screw, which enables it to be withdrawn, giving easy access to the two bulbs.

Later models have only one bulb, as shown in Fig. N.30.

Section N.24

PANEL LAMPS

The instruments are illuminated by small screw-in-type bulbs located behind the instrument panel and

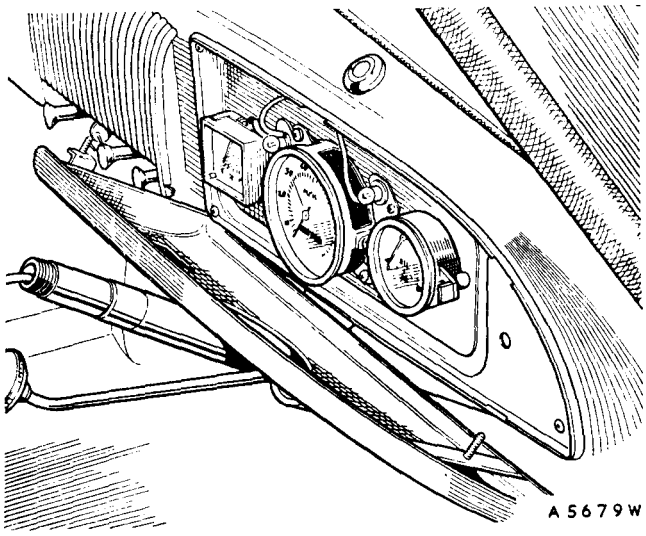

Fig. N.29

Access to the panel lamps is obtained by removing the instrument panel cover

it is therefore necessary to remove the instrument panel cover to obtain access to them.

The cover is secured in position by three wing nuts which may be unscrewed by a hand inserted from beneath the instrument panel.

Later models are fitted with a fixing clip on the instrument backplate and two fixing brackets, for the cover itself, attached to the fascia panel by two bolts, which simplifies removal of the panel.

The lamps are controlled by a switch below the ignition switch and come on when the switch is moved to the left.

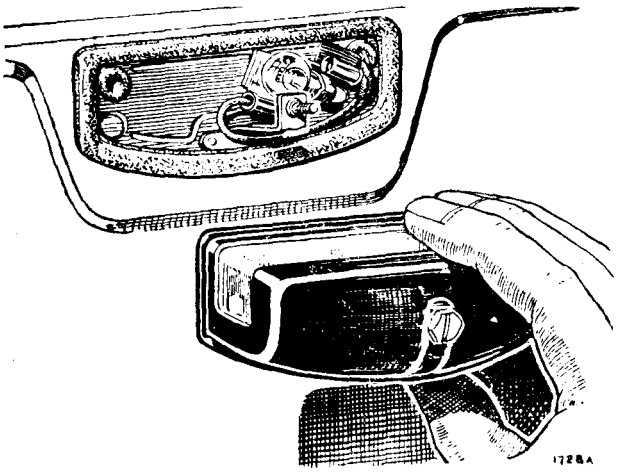

Fig. N.30

The number-plate lamp bulb on later models is easily accessible by unscrewing the lamp cover attachment screw. On earlier models with two bulbs the method of access is the same

Section N.25

IGNITION WARNING LAMP

Access to the bulb of the ignition warning lamp is obtained by unscrewing the slotted plated rim surrounding the light. Removal of the rim releases the bulb from its spring holder and no difficulty arises in replacement. On the earlier models removal of the plated rim releases the warning lamp from the fascia panel and it will drop down behind the panel if it is not held while the rim is removed. Later models have the lamp body held to the fascia panel by a locknut and the bulb can be changed without special precaution.

The ignition warning bulb is a Lucas No. 970, 2·5-volt, 5-watt.

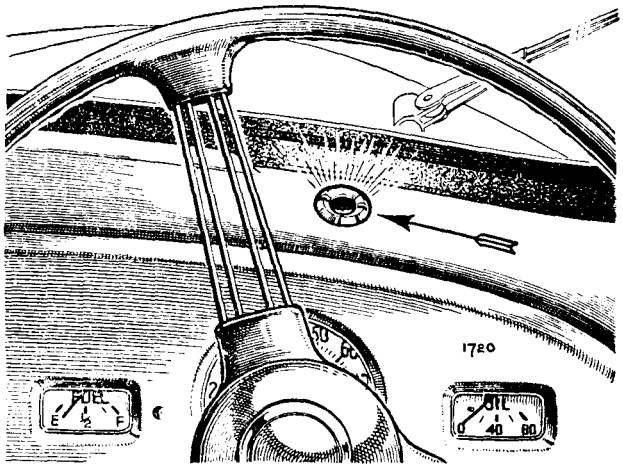

Fig. N.31

The ignition warning lamp bulb can be removed for replacement when required by unscrewing the plated rim, which is slotted to facilitate its removal

Section N.26

LAMP WARNING LIGHT

As it is not possible to observe from the driver's seat if the pilot lamps are on or not, a green warning light is provided on the instrument panel above the ignition switch and throws a beam of light across the ignition key when the pilot lights are on.

The bulb is identical to the instrument panel lamps and is fitted at the back of the panel. Access to it is obtained by withdrawing the bulb and holder assembly from the housing behind the instrument panel.

Section N.27

LOCATION AND REMEDY OF FAULTS

Although every precaution is taken to eliminate possible causes of trouble, failure may occasionally develop through lack of attention to the equipment or damage to the wiring. The following pages set out the recommended procedure for a systematic examination to locate and remedy the causes of some of the more usual faults encountered.

The sources of trouble are by no means always obvious, and in some cases a considerable amount of deduction from the symptoms is needed before the cause is disclosed.

For instance, the engine might not respond to the starter switch; a hasty inference would be that the starter motor is at fault. However, as the motor is dependent on the battery, it may be that the battery is exhausted.

This, in turn, may be due to the dynamo failing to charge the battery, and the final cause of the trouble may be, perhaps, a loose connection in some part of the charging circuit.

If, after carrying out an examination, the cause of the trouble is not found the equipment should be checked by your Distributor or Dealer.

CHARGING CIRCUIT

1. Battery in low state of charge

(*a*) This state will be shown by lack of power when starting, poor light from the lamps, and hydrometer readings below 1·200. It may be due to the dynamo not charging or giving low or intermittent output. The ignition warning light will not go out if the dynamo fails to charge, or will flicker on and off in the event of intermittent output.

(*b*) Examine the charging and field circuit wiring, tightening any loose connections or renewing broken cables. Pay particular attention to the battery connections.

(*c*) Examine the dynamo driving belt; take up any undue slackness by swinging the dynamo outwards on its mounting after slackening the attachment bolts.

(*d*) Check the regulator setting, and adjust if necessary.

(*e*) If, after carrying out the above, the trouble is still not cured, have the equipment examined by your Distributor or Dealer.

2. Battery overcharged

(*a*) This will be indicated by burnt-out bulbs, very frequent need for topping up the battery, and high hydrometer readings. Check the charging current when the engine is running steadily with a fully charged battery and no lights or accessories in use: the charge reading should be of the order of only 3 to 4 amps.

If the charge reading is in excess of this value it is advisable to check the regulator setting and adjust if necessary.

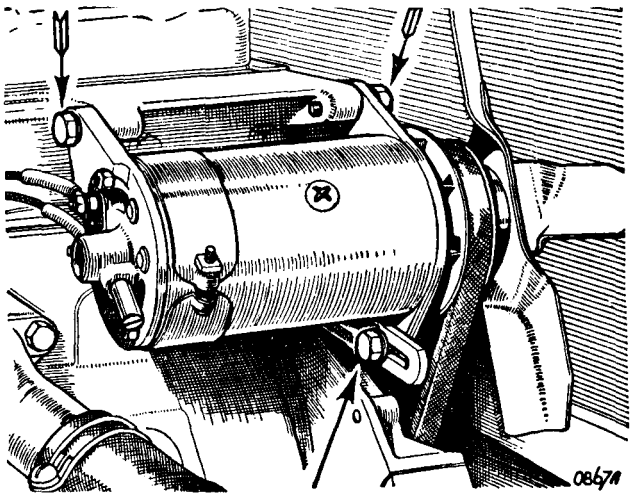

Fig. N.32

The dynamo drive belt is adjusted by slackening the three dynamo attachment bolts and swinging the dynamo on the two upper ones into the desired position. All three must then be tightened carefully

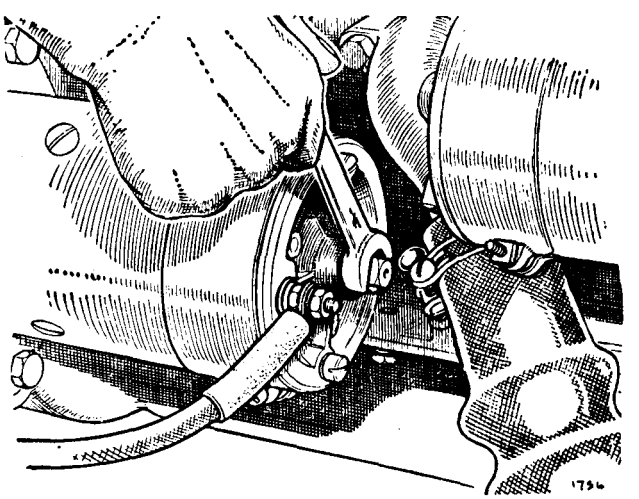

Fig. N.33

Should the starter motor pinion become jammed with the flywheel, it may be freed by rotating the spindle by the square provided on the end

STARTER MOTOR

1. Starter motor lacks power or fails to turn the engine

(*a*) See if the engine can be turned over by hand. If not, the cause of the stiffness in the engine must be located and remedied.

(*b*) If the engine can be turned by hand, first check that the trouble is not due to a discharged battery.

(*c*) Examine the connections to the battery, starter, and starter switch, making sure that they are tight and that the cables connecting these units are not damaged.

(*d*) It is also possible that the starter pinion may have jammed in mesh with the flywheel, although this is by no means a common occurrence. To disengage the pinion rotate the squared end of the starter shaft by means of a spanner.

2. Starter operates but does not crank the engine

This fault will occur if the pinion of the starter drive is not allowed to move along the screwed sleeve into engagement with the flywheel due to dirt having collected on the screwed sleeve. Remove the starter and clean the sleeve carefully with paraffin.

3. Starter pinion will not disengage from the flywheel when the engine is running

Stop the engine and see if the starter pinion is jammed in mesh with the flywheel, releasing it if necessary by rotation of the squared end of the starter shaft. If the pinion persists in sticking in mesh have the equipment examined by your Distributor or Dealer. Serious damage may result to the starter if it is driven by the flywheel.

LIGHTING CIRCUITS

1. Lamps give insufficient illumination

(*a*) Test the state of charge of the battery, recharging it if necessary from an independent electrical supply.

(*b*) Check the setting of the lamps.

(*c*) If the bulbs are discoloured as the result of long service they should be renewed.

2. Lamps light when switched on but gradually fade out

As paragraph 1 (*a*).

3. Brilliance varies with the speed of the engine

(*a*) As paragraph 1 (*a*).

(*b*) Examine the battery connections, making sure that they are tight, and renew any faulty cables.

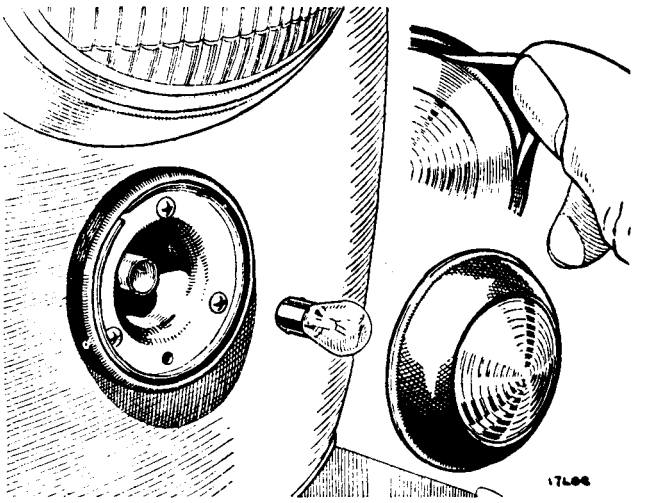

Fig. N.34

The method of removing the lamp glass and rim from the pilot lamp is here clearly shown

Section N.28

PILOT LAMPS

Later models are fitted with separate pilot lamps mounted immediately below the headlamps. Access to the bulbs is obtained, without disturbing the headlamps, by folding back the rubber retaining ring with the fingers and extracting the glass and its rim.

The method will be clear from Fig. N.34.

KEY TO CABLE COLOURS

1 Blue	15 White *with* Brown	28 Yellow *with* White	41 Red	54 Purple *with* Green
2 Blue *with* Red	16 White *with* Black	29 Yellow *with* Green	42 Red *with* Yellow	55 Purple *with* Brown
3 Blue *with* Yellow	17 Green	30 Yellow *with* Purple	43 Red *with* Blue	56 Purple *with* Black
4 Blue *with* White	18 Green *with* Red	31 Yellow *with* Brown	44 Red *with* White	57 Black
5 Blue *with* Green	19 Green *with* Yellow	32 Yellow *with* Black	45 Red *with* Green	58 Black *with* Red
6 Blue *with* Purple	20 Green *with* Blue	33 Brown	46 Red *with* Purple	59 Black *with* Yellow
7 Blue *with* Brown	21 Green *with* White	34 Brown *with* Red	47 Red *with* Brown	60 Black *with* Blue
8 Blue *with* Black	22 Green *with* Purple	35 Brown *with* Yellow	48 Red *with* Black	61 Black *with* White
9 White	23 Green *with* Brown	36 Brown *with* Blue	49 Purple	62 Black *with* Green
10 White *with* Red	24 Green *with* Black	37 Brown *with* White	50 Purple *with* Red	63 Black *with* Purple
11 White *with* Yellow	25 Yellow	38 Brown *with* Green	51 Purple *with* Yellow	64 Black *with* Brown
12 White *with* Blue	26 Yellow *with* Red	39 Brown *with* Purple	52 Purple *with* Blue	65 Dark Green
13 White *with* Green	27 Yellow *with* Blue	40 Brown *with* Black	53 Purple *with* White	66 Light Green
14 White *with* Purple				

WIRING DIAGRAM (All Models with Combined Head and Pilot Lamps)

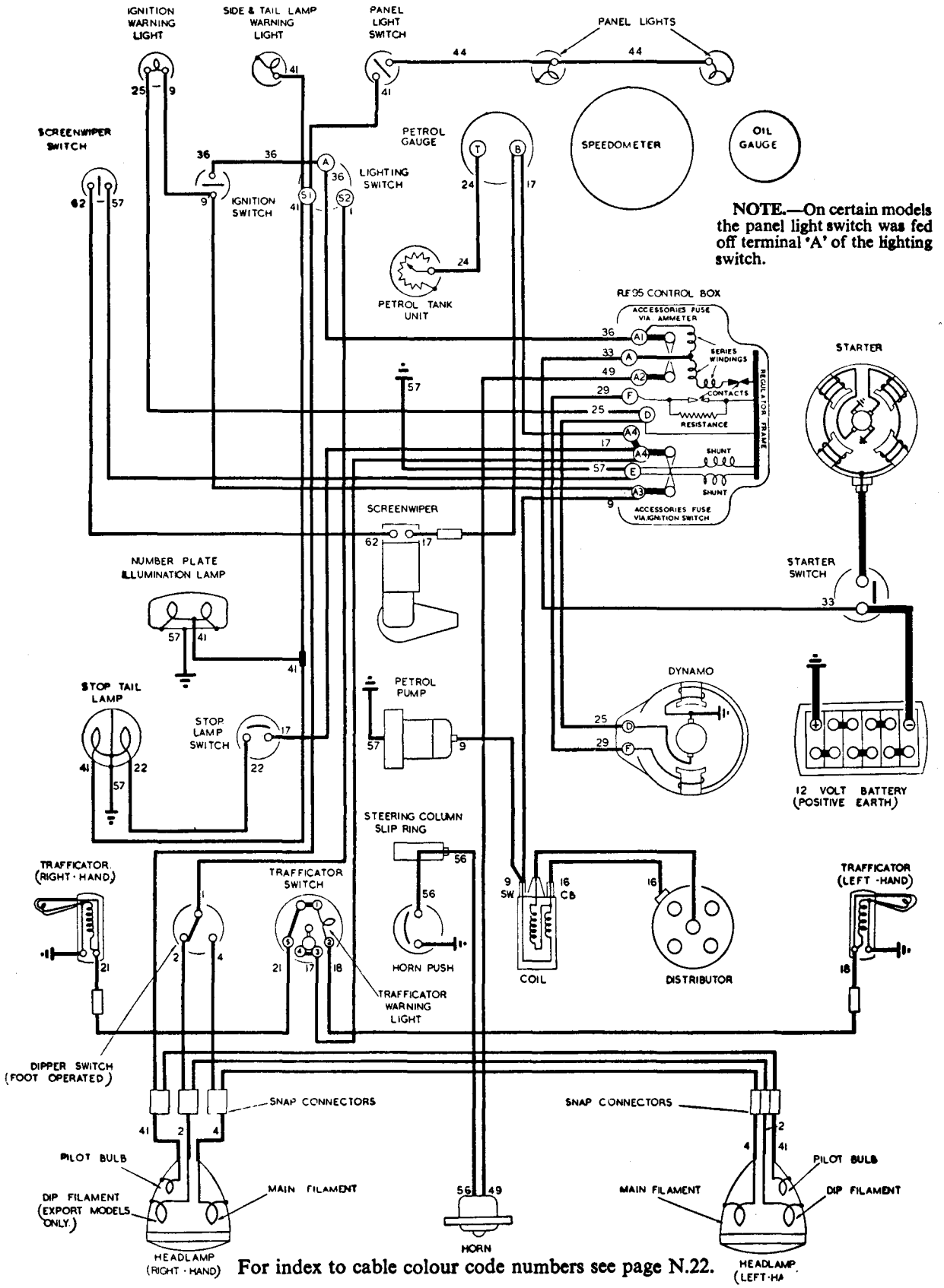

NOTE.—On certain models the panel light switch was fed off terminal 'A' of the lighting switch.

For index to cable colour code numbers see page N.22.

WIRING DIAGRAM (U.S.A. Models Only)

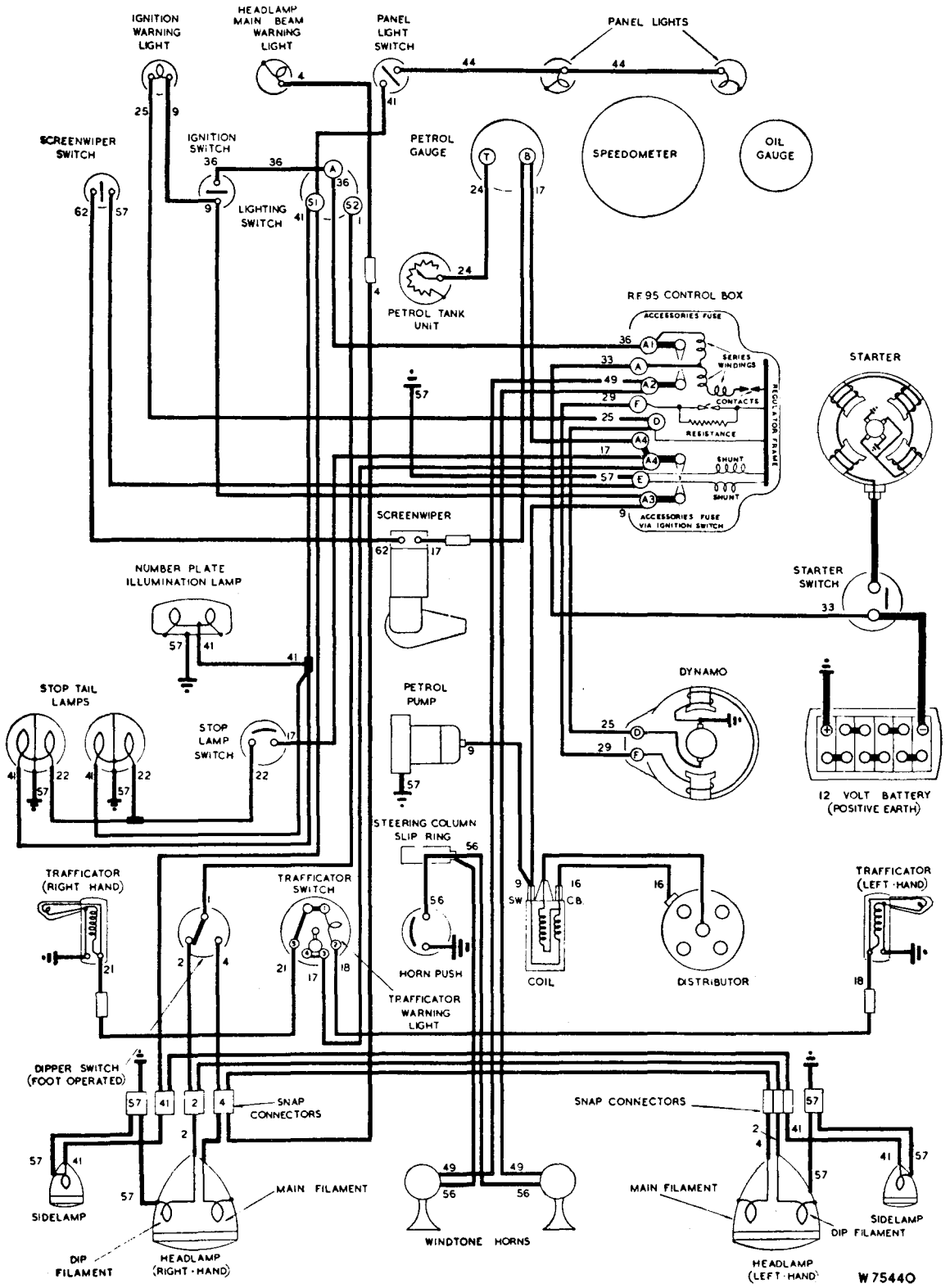

For index to cable colour code numbers see page N.22.

WIRING DIAGRAM (All Models with Separate Head and Pilot Lamps—except U.S.A. Models)

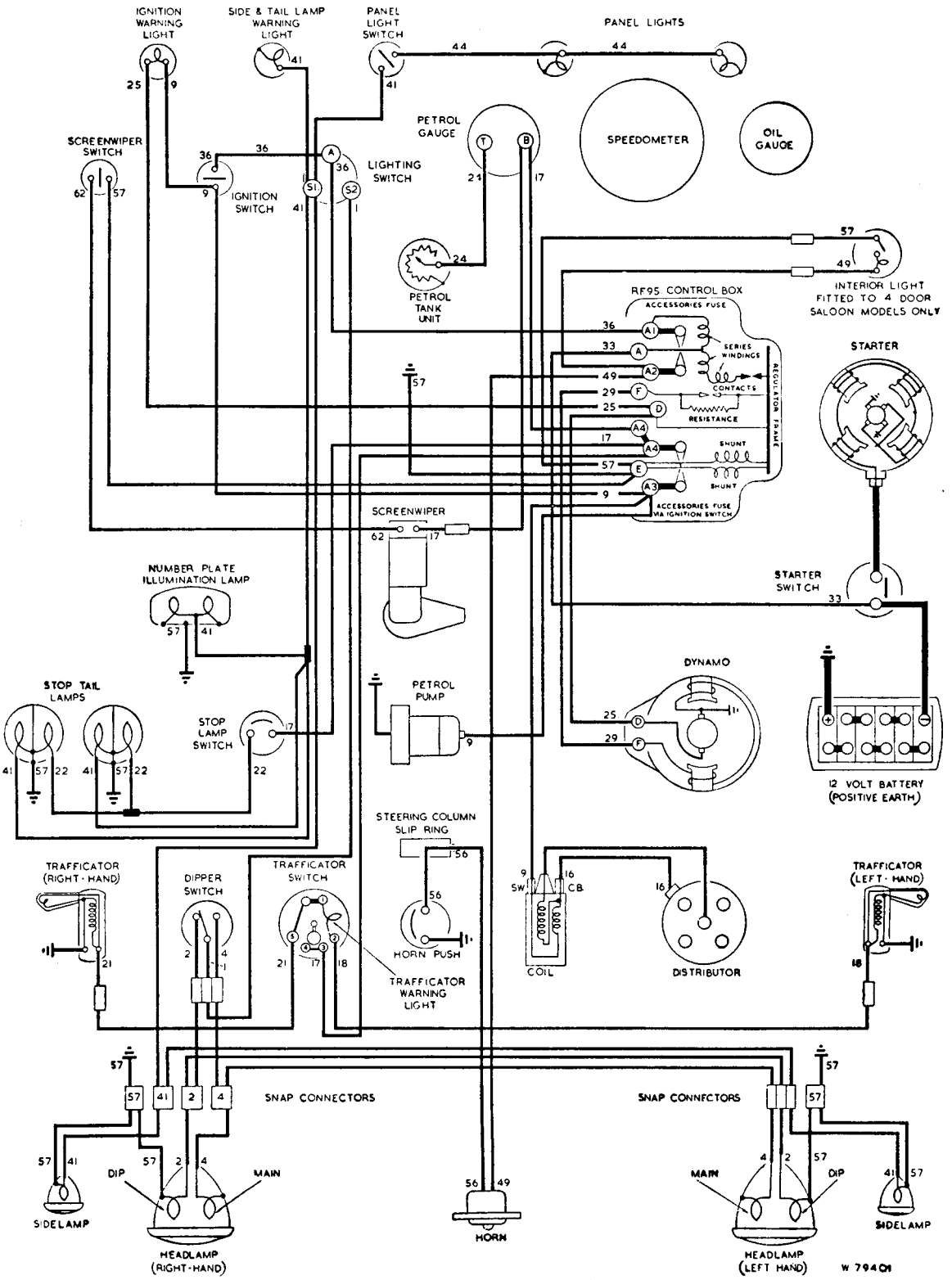

For index to cable colour code numbers see page N.22.

WIRING DIAGRAM (U.S.A. Models only with Separate Control Boxes and Fuseboxes)

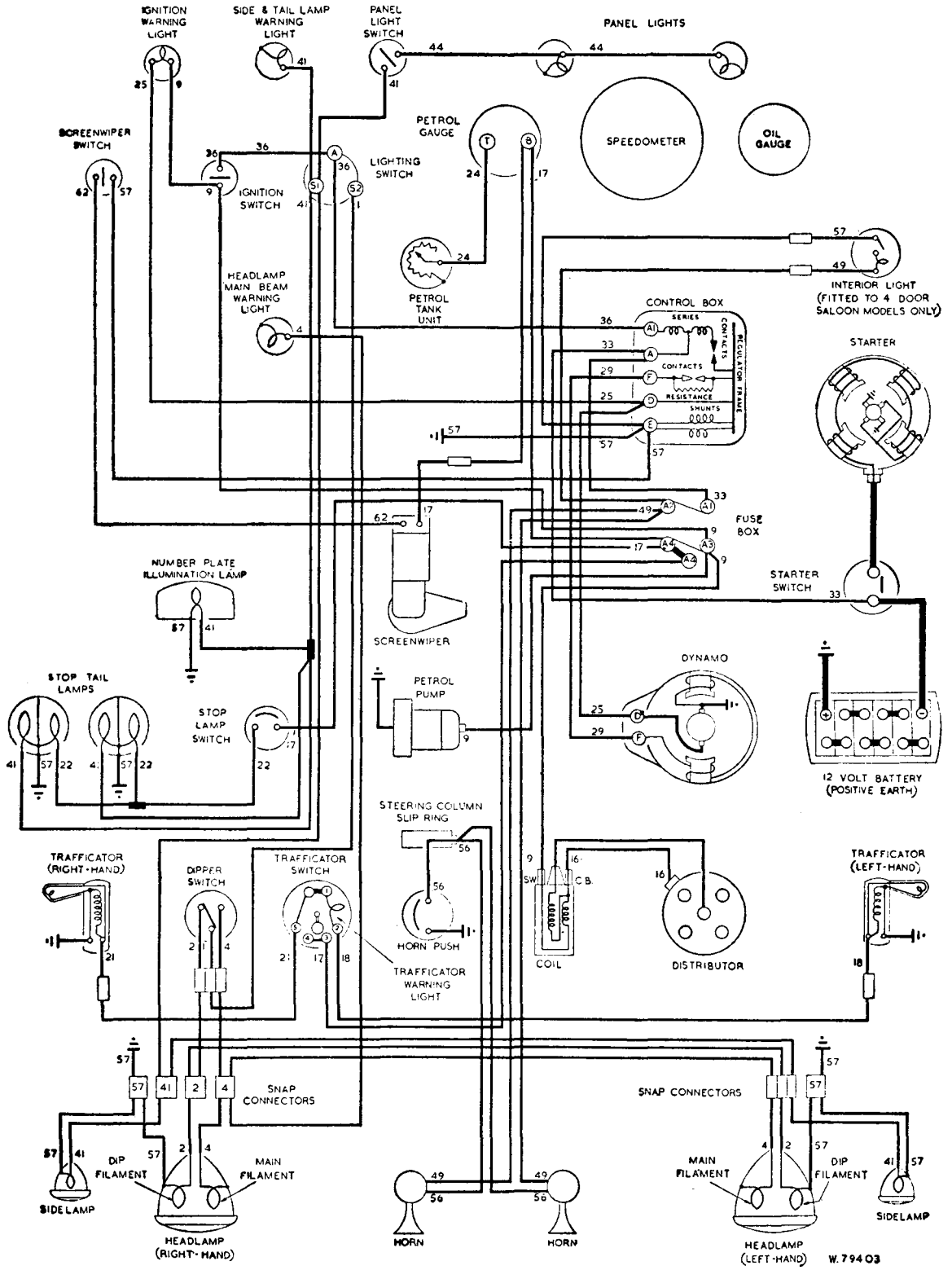

For index to cable colour code numbers see page N.22.

WIRING DIAGRAM (Models with Separate Control Boxes and Fuseboxes)

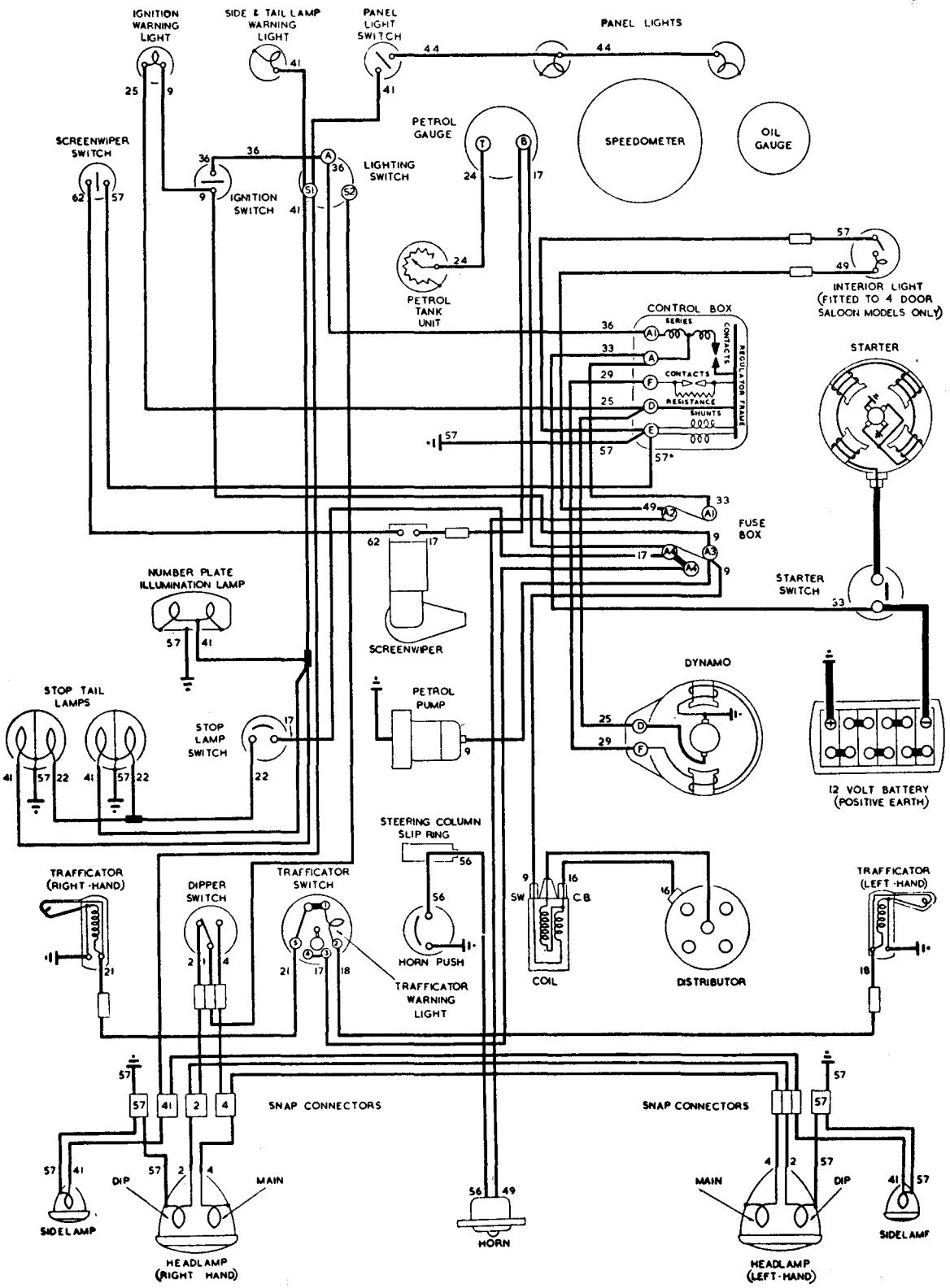

For index to cable colour code numbers see page N.22.

WIRING DIAGRAM (Models with Separate Control Boxes and Fuseboxes and Headlamp Main Beam Warning Light)

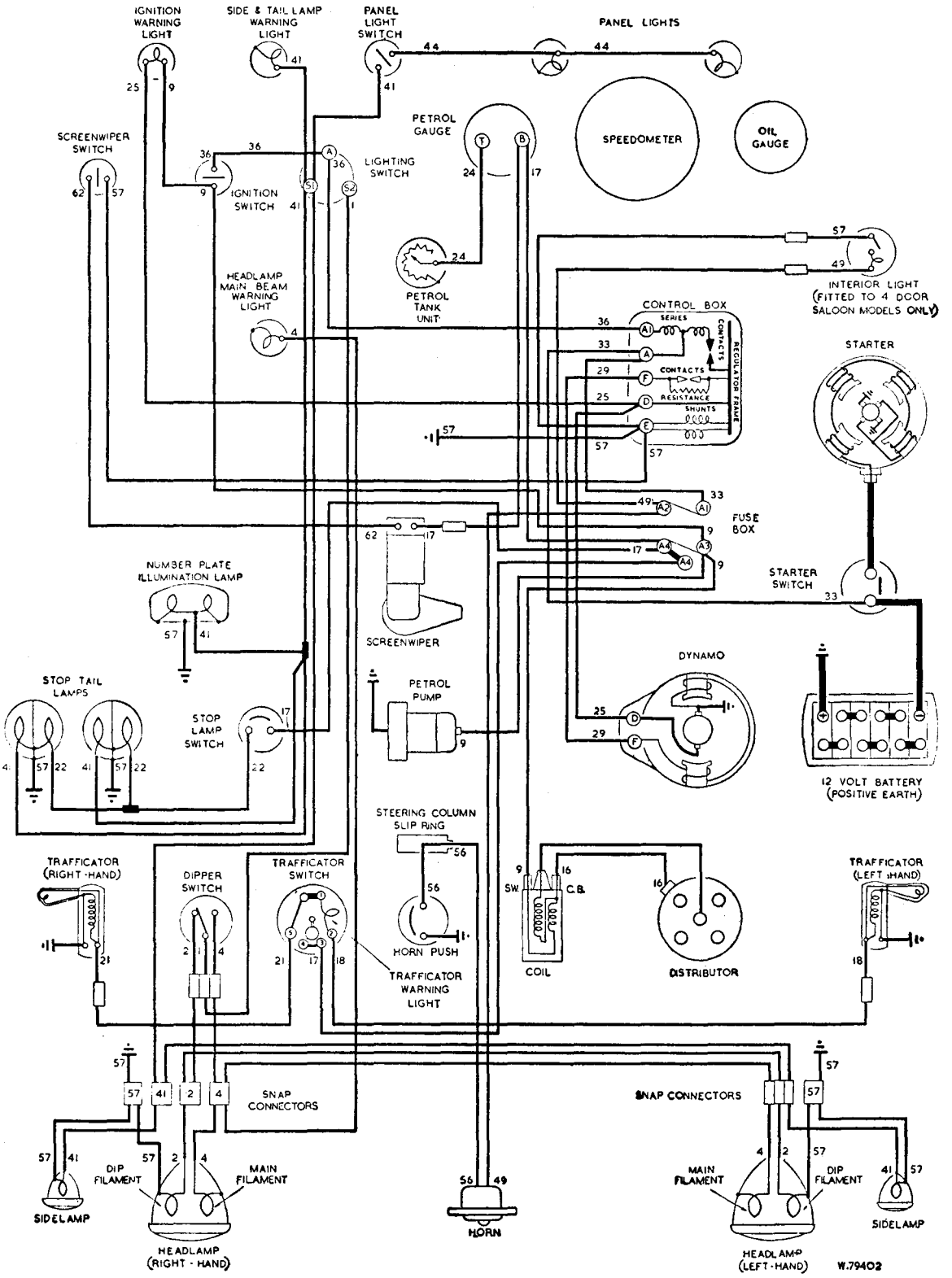

For index to cable colour code numbers see page N.22.

WIRING DIAGRAM (Models Fitted with Flashing Direction Indicator Equipment)

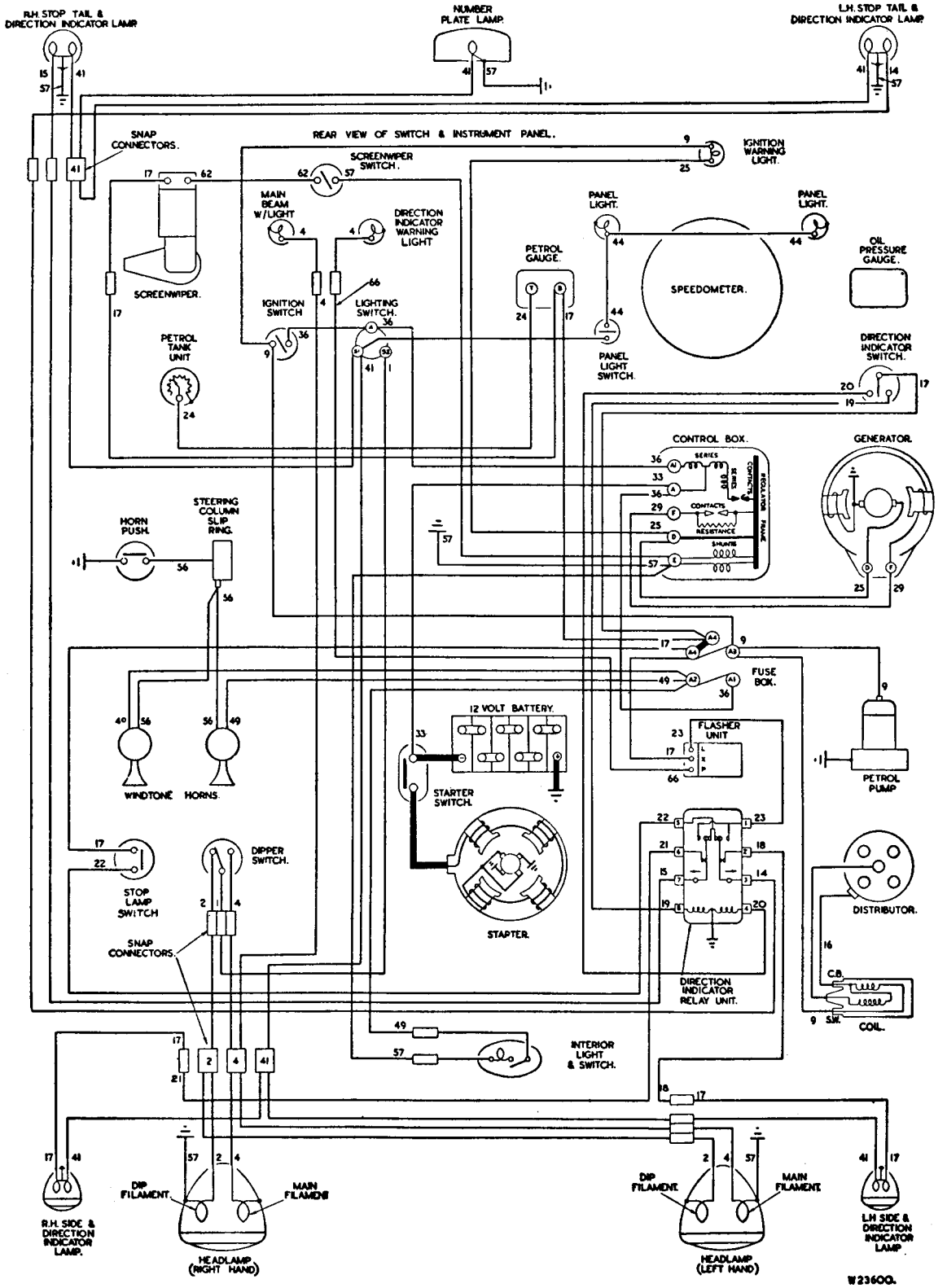

For index to cable colour code numbers see page N.22.

WIRING DIAGRAM—Home and Export (Right-hand-drive Models with Central Instrument Dials)

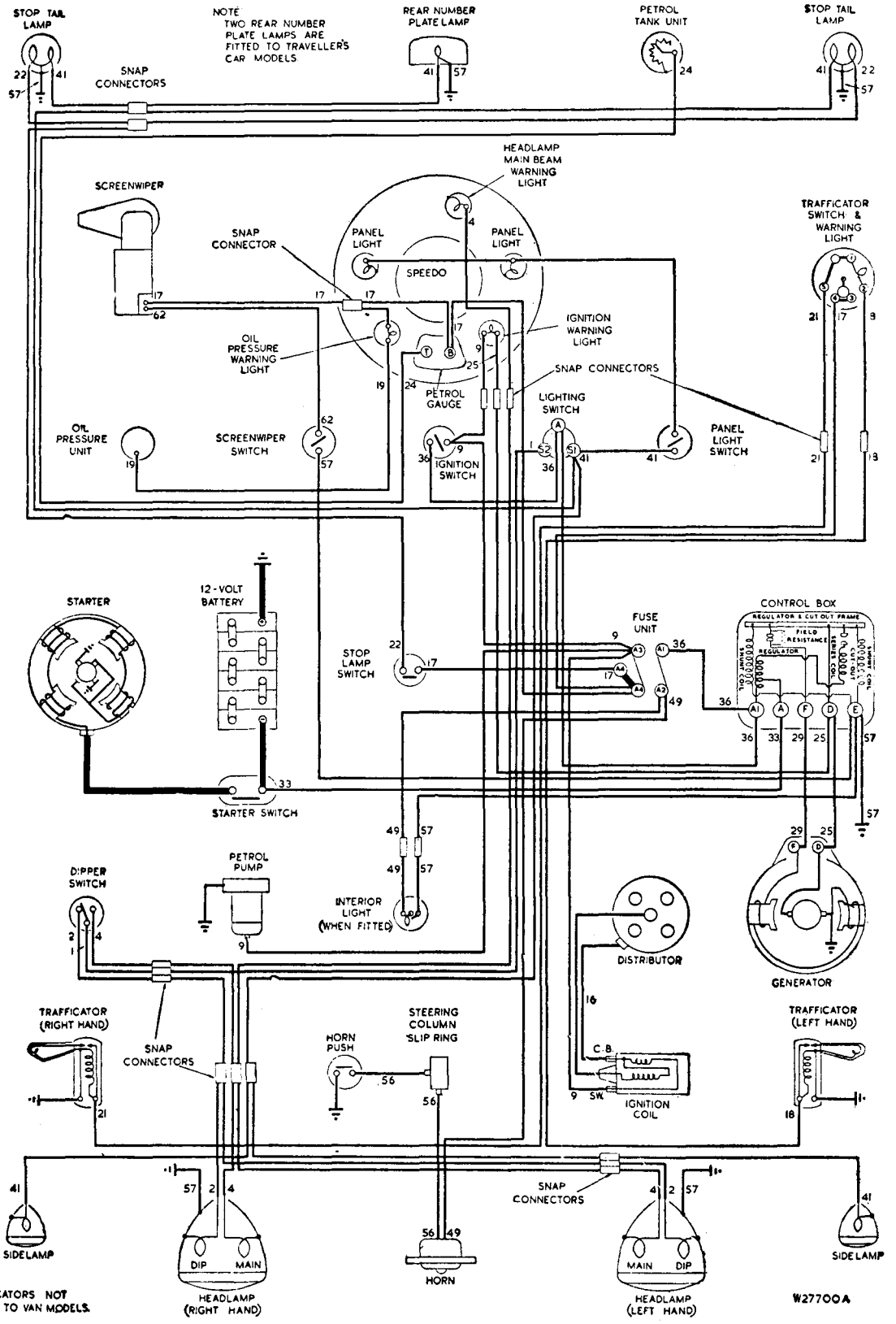

For index to cable colour code numbers see page N.22.

WIRING DIAGRAM—Export (Left-hand-drive Models with Central Instrument Dial and Flashing Direction Indicators)

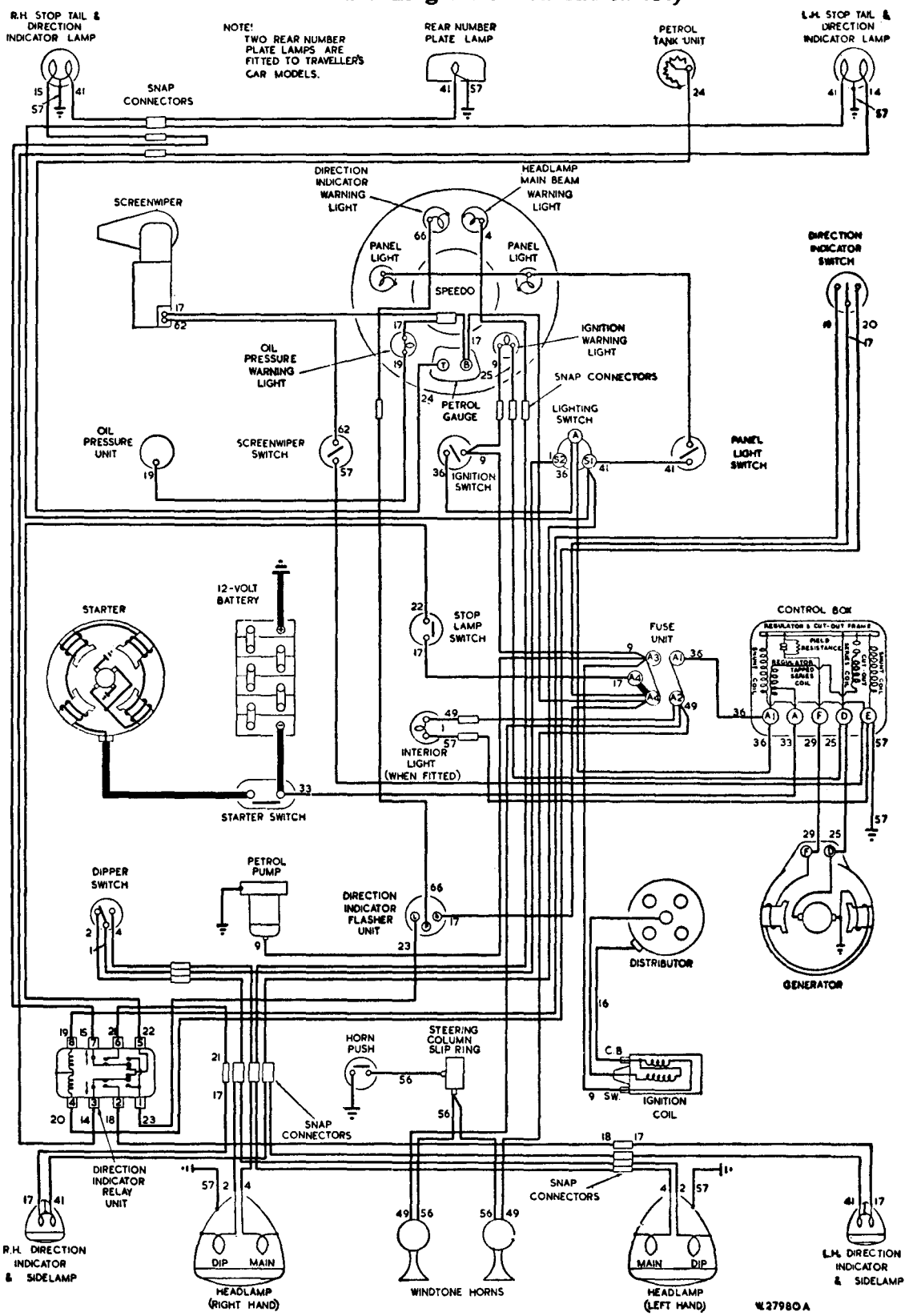

For index to cable colour code numbers see page N.22.

Section N.29

INSTALLATION OF TRAFFIC INDICATORS

To fit traffic indicators the following procedure must be carried out.

Assemble the indicator to the fixing plate. This is done by inserting the tag on the indicator body through the slot marked (A) in Fig. N.35 and securing these two parts by means of the cheese-headed screw and shakeproof washer (B). Thread the wire through the hole (C) and connect it to its terminal.

Fit the fixing plate to the body panel by means of the two Phillips-head screws, leaving them very loose so that the baffle plate may be inserted between the body panel and the fixing plate.

Finally, tighten the two Phillips-head screws.

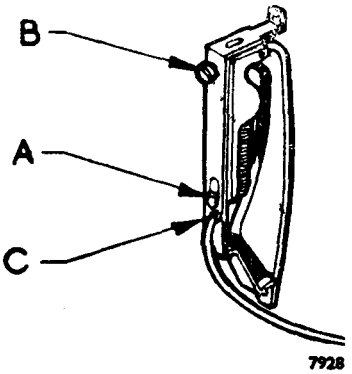

Fig. N.35
The method of installing traffic indicators on the fixing plate

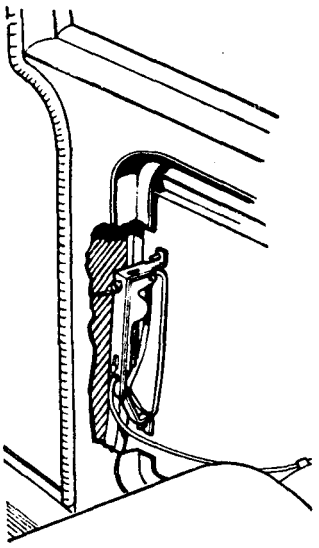

Fig. N.36
The trafficator assembly fitted loosely to the body panel

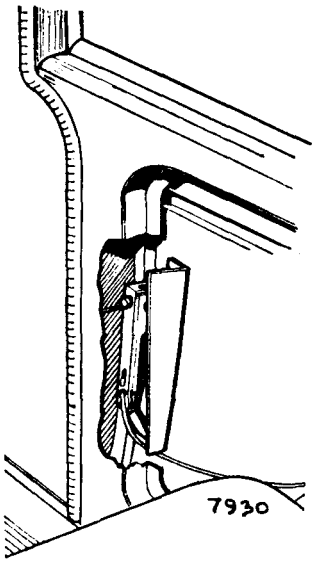

Fig. N.37
The baffle plate in position

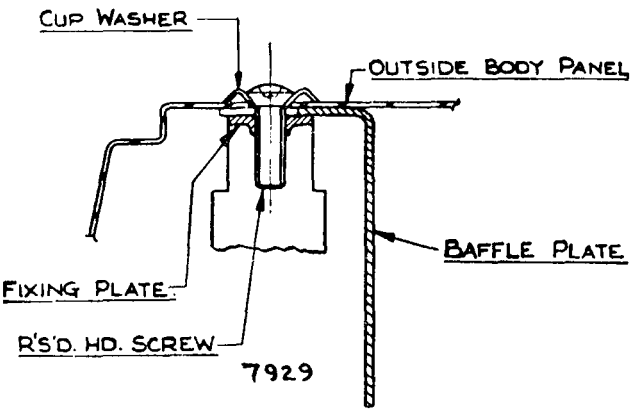

Fig. N.38
Showing the manner in which the baffle plate is Inserted between the body panel and the trafficator fixing plate

Section N.30

TRAFFICATORS
(Later Models)

The arm may be removed from a trafficator fitted to later cars without removing the trafficator from the car. Switch on the trafficator to raise the arm (never prise it up with a screwdriver) and release the cover by extracting the retaining screw on the outer end. Note that the inner end is hooked under the inner end of the arm.

Remove the bulb and unscrew the arm clamping screw. Withdraw the arm.

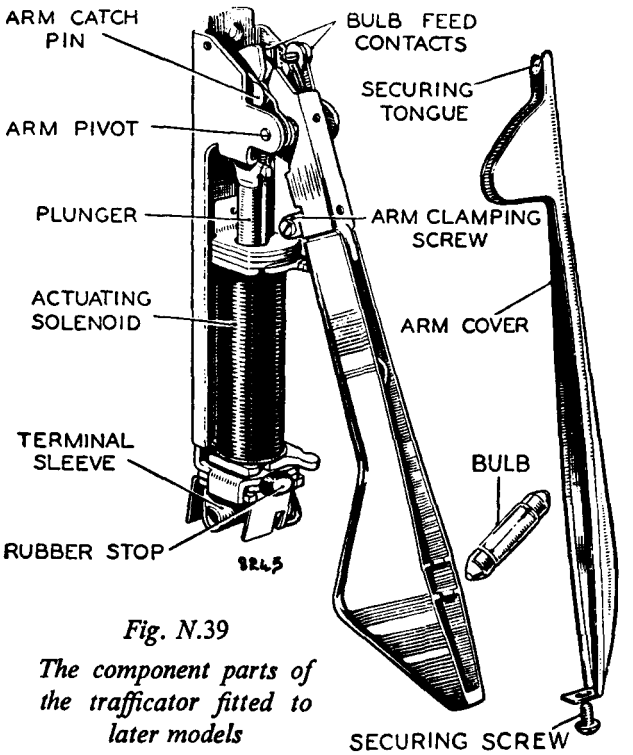

Fig. N.39
The component parts of the trafficator fitted to later models

Section N.31

PANEL LAMPS AND WARNING LAMPS
(Later Models)

The panel and warning lamp bulbs on later cars fitted with a central instrument dial are reached after removing the complete instrument. This is secured by a Phillips-head screw on each side and there is a small hole in the inner wall of each glovebox through which the screwdriver may be inserted.

The instrument draws out forward and the defective bulbs can then easily be replaced.

Section N.32

WINDOWLESS YOKE DYNAMO

From engine No. 237226 to 237500 and 238627 onwards a new dynamo without brush gear inspection windows is introduced (Fig. N.40). Access to the brush gear in these dynamos is gained by undoing the two through-bolts and withdrawing the commutator end bracket. At overhaul periods the unit should be partially dismantled for the inspection of brush gear and commutator.

To check the brush spring tension the yoke should be completely withdrawn from the armature and the commutator end bracket refitted to the shaft.

When reassembling a windowless yoke dynamo the brushes must first be held clear of the commutator in the usual way, i.e. by partially withdrawing the brushes from their brush boxes until each brush is trapped in position by the side pressure of its spring. The brushes can be released onto the commutator with a small screwdriver or similar tool when the end bracket is assembled to within about ½ in. (13 mm.) of the yoke. Before closing the gap between the end bracket and yoke see that the springs are in correct contact with the brushes.

Coil steady plate 11G 221 should always be used with dynamo 11G 220.

Section N.33

MODIFIED CONTROL BOX

A modified C.V.C. control box (Part No. AHH 5356) is introduced on later cars with revised settings. Servicing instructions remain as before (see Section N.9), but adjustments must be made within 30 seconds, otherwise heating of the shunt winding will cause false settings to be made.

The voltmeter readings should be within the limits given below at approximately 1,500 dynamo r.p.m. and according to the ambient temperature:

Setting at 10° C. (50° F.)	..	15·9 to 16·5 volts
„ „ 20° C. (68° F.)	..	15·6 to 16·2 „
„ „ 30° C. (86° F.)	..	15·3 to 15·9 „
„ „ 40° C. (104° F.)	..	15·0 to 15·6 „

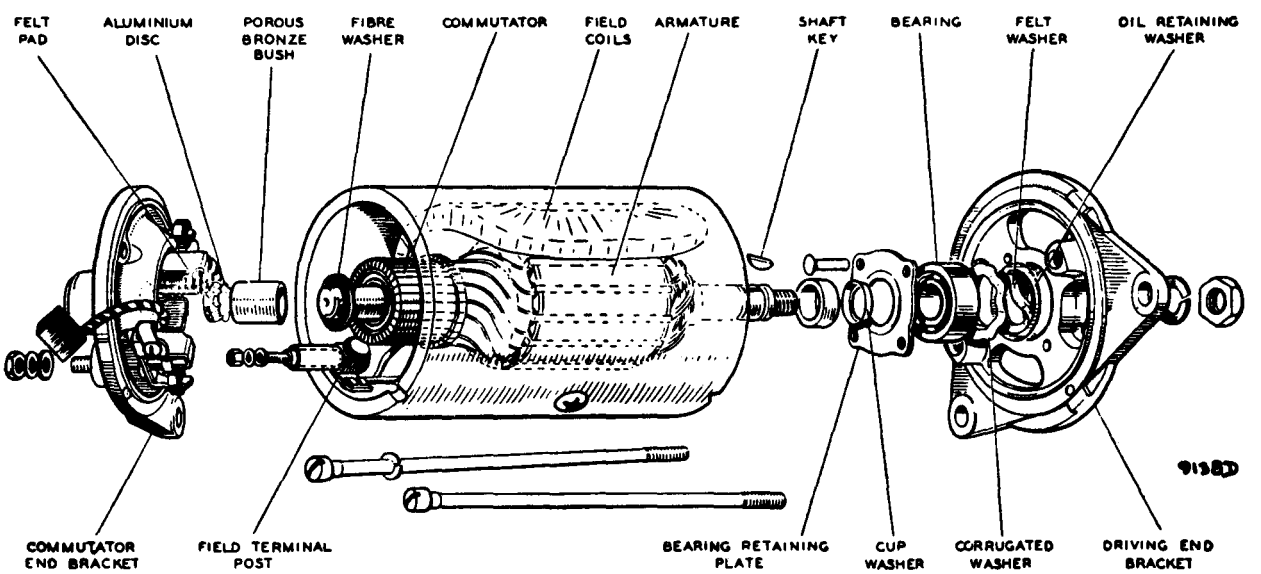

Fig. N.40

The windowless yoke dynamo

Section N.34

WINDTONE HORN

All horns before being passed out of the Works are adjusted to give their best performance and will give a long period of service without any attention; no subsequent adjustment is normally required.

If a horn fails or becomes uncertain in its action it does not follow that the horn has broken down. First ascertain that the trouble is not due to a loose or broken connection in the wiring of the horn. The trouble may be due to a blown fuse or discharged battery. If the fuse has blown examine the wiring for the fault and replace with the spare fuse provided.

It is also possible that the performance of a horn may be upset by the fixing bolts working loose, or by some component near the horn being loose. If, after carrying out the above examination, the trouble is not rectified the horn may need adjustment, but this should not be necessary until the horns have been in service for a long period.

Adjustment does not alter the pitch of the note: it merely takes up wear of moving parts. When adjusting the horns short-circuit the fuse, otherwise it is liable to blow. Again, if the horns do not sound on adjustment release the push instantly.

Adjustment

Remove the fixing screw from the top of the horn and take off the cover. Detach the cover securing bracket by springing it out of location.

Slacken the locknut on the fixed contact and rotate the adjusting nut until the contacts are just separated (indicated by the horn failing to sound). Turn the adjusting nut half a turn in the opposite direction and secure it in this position by tightening the locknut.

Section N.35

INTERIOR LAMPS

The interior light is located on the roof and is controlled by a switch on the forward edge of the lamp.

Access to the bulb for replacement is achieved by removing the two screws in the plastic lamp cover and removing the cover. The bulb is Lucas No. 989, 12-volt, 6-watt.

Section N.36

WINDSHIELD WIPER
(Minor 1000)

The self-returning windshield wiper motor fitted to later models is mounted under the bonnet on the left-hand wing valance. The windshield wiper arms are retained on the splined drive spindles with spring clips.

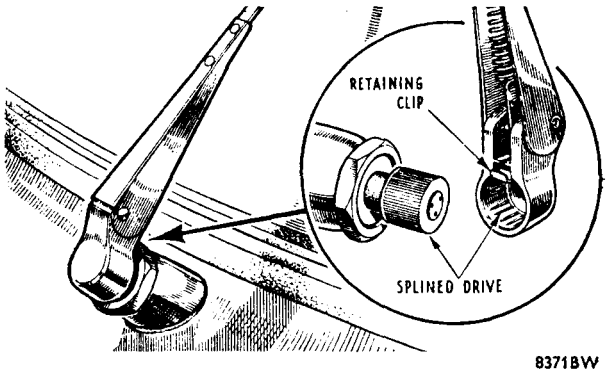

Fig. N.41

The retaining clip shown in the inset must be raised to release the windshield wiper arm from the spindle

To detach the cable rack from the motor and gearbox

Unscrew the pipe union nut; remove the gearbox cover.

Remove the split pin and washer from the crank pin and final gear wheel; lift off the connecting link.

To remove the motor

Detach the cable rack from the motor as detailed above. Disconnect the motor cables. Remove the three nuts, spring washers, and rubber distance pieces securing the motor to the bracket and remove the motor.

To set and adjust the parking position

Remove the windshield wiper arms. Slacken the three cover securing screws and rotate the automatic parking switch until the two rivet heads are at one o'clock to the drive cable and towards the outlet for it; retighten the three cover screws. Switch on the motor and then switch off. Refit the wiper arms to the drive spindles in the parked position.

Section N.37

DIRECTION INDICATOR AND HORN CONTROL SWITCH
(Minor 1000)

On later models the combined direction indicator control switch and horn switch are mounted on the right-hand side of the steering-column. The direction indicators are operated by moving the switch control lever to the left or right and the horn by pressing the knob on the end of the lever.

Section N.38

DIRECTION INDICATOR WARNING LIGHT
(Minor 1000)

Commencing at Car Nos. 579228 and 572907 (Traveller), the direction indicator warning light is transferred from the dash panel to the control switch on top of the steering-column.

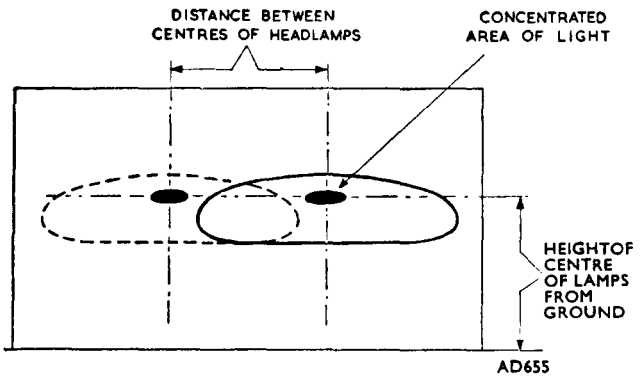

Fig. N.42
Headlamp—alignment

Section N.39

HEADLAMP BEAM SETTING

Refer to Section N.20 for details of the headlamp adjustment screws.

In the absence of specialized proprietary equipment the setting of the lamps can be carried out by placing the vehicle squarely in front of a blank wall at a distance of 25 ft. (7·6 m.) or more, taking care that the surface on which the car is standing is level and not sloping in relation to the wall. The vehicle should be loaded. It will be found an advantage to cover one lamp while setting the other.

Section N.40

COURTESY LIGHT SWITCHES
(Minor 1000)

Commencing at Car Nos. 654750 (two- and four-door Saloons) and 663372 (Traveller), courtesy light switches are fitted on the front door-posts. With the pilot lamps on or off, opening either of the front doors brings the interior light into operation.

To remove a switch it will be necessary to use a Phillips-type screwdriver. Push in the switch plunger and engage the screwdriver blade in the switch housing. Unscrew the housing and ease it from the door pillar. The cable is secured by a snap connector and is coloured brown with a black tracer.

Section N.41

DRY-CHARGED BATTERIES

'Dry-charged' batteries are supplied without electrolyte but with the plates in a charged condition. This ensures that there is no deterioration of the battery if it is stored for a period before use. These batteries have the type suffix letter 'Z' (e.g. BTZ, etc.).

Filling the cells with electrolyte of the correct specific gravity (see **'Initial filling and charging'** of Section N.1), **in one operation,** renders the battery capable of giving a starting discharge **one hour after filling.** The temperature of the filling-in solution, battery, and filling room should be maintained between 16° C. (60° F.) and 38° C. (100° F.). If the battery has been stored in a cool place it should be allowed to warm up to room temperature before filling.

When time permits, a freshening charge at the normal recharge rate of the battery will ensure that the battery is fully charged. During the charge keep the electrolyte just above the top of the separators or separator guard by the addition of distilled water. Check the electrolyte specific gravity at the end of the charge: if 1·260 acid was used to fill the battery, the specific gravity should now be between 1·270 and 1·290: if 1·210 acid was used, the specific gravity should be between 1·210 and 1·230.

Section N.42

MODIFIED HORN AND DIRECTION INDICATOR CONTROLS
(Minor 1000)

Later cars are fitted with a modified steering-column assembly (see Section JJ.2) having the horn-push mounted in the centre of the steering-wheel. The manually returned direction indicator switch and combined horn-push is replaced by a direction indicator switch of self-cancelling type with a warning lamp incorporated in the end of its operating lever.

This modification was introduced on the following cars:

From Car No. 705622 (two-door).
From Car No. 705224 (four-door).
From Car No. 704254 (Traveller).

To remove the warning lamp bulb, unscrew and remove the small translucent plastic cover at the tip of the direction indicator control lever. Unscrew the Lilliput bulb from its holder. The bulb part number is given in Section N.15.

Section N.43

EUROPEAN LIGHT UNITS
(Minor 1000)

Cars exported to Europe are now fitted with the new European-type headlamps. These lamp units have special bulbs, and front lenses giving an asymmetrical beam to the right- or left-hand side according to the regulations prevailing in the country concerned.

WIRING DIAGRAM (Models with Later-type Trafficator Control)

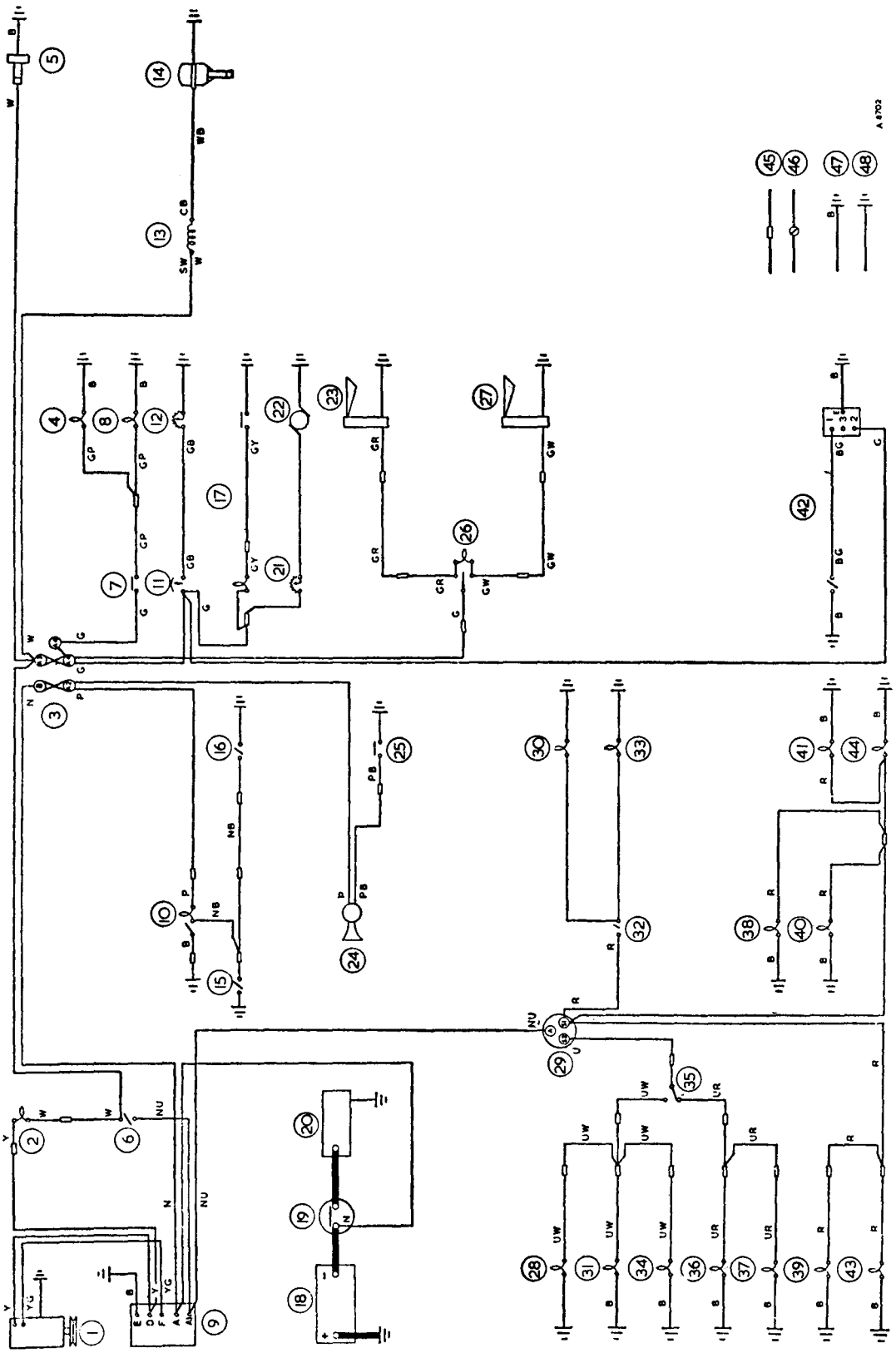

KEY TO WIRING DIAGRAM (Models with Later-type Trafficator Control)

No.	*Description*
1.	Dynamo.
2.	Ignition warning light.
3.	Fuse unit.
4.	L.H. stop lamp.
5.	Fuel pump.
6.	Ignition switch.
7.	Stop lamp switch.
8.	R.H. stop lamp.
9.	Control box.
10.	Interior light and switch (when fitted)—earthed to control box terminal 'E'.
11.	Fuel gauge.
12.	Fuel tank unit.
13.	Ignition coil.
14.	Distributor.
15.	Courtesy light switch (when fitted).
16.	Courtesy light switch (when fitted).
17.	Oil pressure warning light and switch.
18.	12-volt battery.
19.	Starter switch.
20.	Starter motor.
21.	Heater rheostat (when fitted).
22.	Heater.
23.	L.H. trafficator.
24.	Horn.
25.	Horn-push.
26.	Trafficator switch and warning light.
27.	R.H. trafficator.
28.	Main-beam warning light.
29.	Lighting switch.
30.	Panel light.
31.	R.H. headlight main beam.
32.	Panel light switch.
33.	Panel light.
34.	L.H. headlight main beam.
35.	Dipper switch.
36.	R.H. headlight dip beam.
37.	L.H. headlight dip beam.
38.	R.H. tail lamp.
39.	L.H. sidelamp.
40.	L.H. tail lamp.
41.	Number-plate lamp.
42.	Screen wiper switch and motor—earthed to control box terminal 'E'.
43.	R.H. sidelamp.
44.	Number-plate lamp.
45.	Snap connectors.
46.	Terminal blocks or junction box.
47.	Earth connections made via cable.
48.	Earth connections made via fixing bolts.

CABLE COLOUR CODE

B. Black.	P. Purple.	Y. Yellow.
U. Blue.	R. Red.	D. Dark.
N. Brown.	S. Slate.	L. Light.
G. Green.	W. White.	M. Medium.

When a cable has two colour code letters the first denotes the main colour and the second denotes the tracer colour

WIRING DIAGRAM (Models with Later-type Flashing Indicator Control)

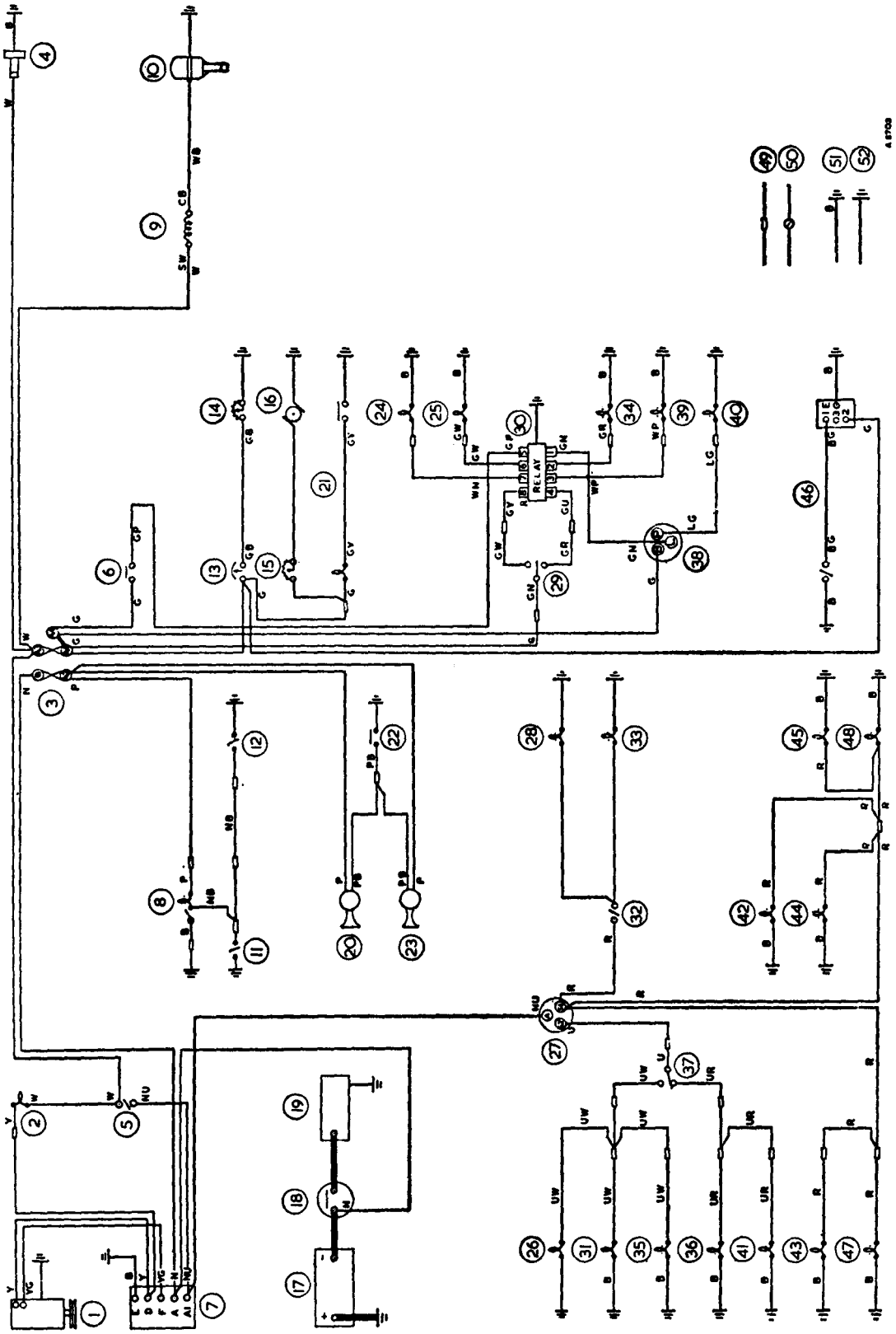

KEY TO WIRING DIAGRAM (Models with Later-type Flashing Indicator Control)

No.	Description
1.	Dynamo.
2.	Ignition warning light.
3.	Fuse unit.
4.	Fuel pump.
5.	Ignition switch.
6.	Stop lamp switch.
7.	Control box.
8.	Interior light and switch (when fitted)—earthed to control box terminal 'E'.
9.	Ignition coil.
10.	Distributor.
11.	Courtesy light switch (when fitted).
12.	Courtesy light switch (when fitted).
13.	Fuel gauge.
14.	Fuel tank unit.
15.	Heater rheostat (when fitted).
16.	Heater (when fitted)
17.	12-volt battery.
18.	Starter switch.
19.	Starter motor.
20.	Horn.
21.	Oil pressure warning light and switch.
22.	Horn-push.
23.	Horn.
24.	R.H. rear flasher and stop lamp.
25.	R.H. front flasher.
26.	Main-beam warning light.
27.	Lighting switch.
28.	Panel light.
29.	Flasher switch.
30.	Relay.
31.	R.H. headlight main beam.
32.	Panel light switch.
33.	Panel light.
34.	L.H. front flasher.
35.	L.H. headlight main beam.
36.	R.H. headlight dip beam.
37.	Dipper switch.
38.	Flasher unit.
39.	L.H. rear flasher and stop lamp.
40.	Flasher warning light.
41.	L.H. headlight dip beam.
42.	R.H. tail lamp.
43.	L.H. sidelamp.
44.	L.H. tail lamp.
45.	Number-plate lamp.
46.	Screen wiper switch and motor—earthed to control box terminal 'E'.
47.	R.H. sidelamp.
48.	Number-plate lamp.
49.	Snap connectors.
50.	Terminal blocks or junction box.
51.	Earth connections made via cable.
52.	Earth connections made via fixing bolts.

CABLE COLOUR CODE

B. Black.	P. Purple.	Y. Yellow.
U. Blue.	R. Red.	D. Dark
N. Brown.	S. Slate.	L. Light.
G. Green.	W. White.	M. Medium.

When a cable has two colour code letters the first denotes the main colour and the second denotes the tracer colour.

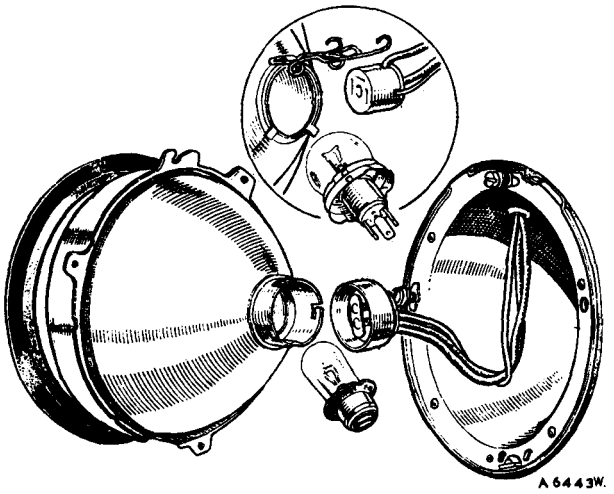

Fig. N.43

The headlamp light unit (later R.H.D. and L.H.D. except European and sealed-beam types), with the European-type lamp bulb arrangement inset

This modification was introduced on the following cars:

From Car No. 705700 (two- and four-door)	Europe except Sweden.
From Car No. 696910 (Traveller)	Europe except Sweden.
From Car No. 733180 (all versions)	Sweden.

Access to the bulb is gained in the same way as described in Section N.18. The bulb, however, is released from the reflector by withdrawing the three-pin socket and pinching the two ends of the wire retaining clip to clear the bulb flange (see Fig. N.43).

When replacing the bulb take care to engage the rectangular pip on the bulb flange with the slot in the reflector seating for the bulb.

Replace the spring clip with its coils resting in the base of the bulb flange and engaging in the two retaining lugs on the reflector seating.

The appropriate replacement bulbs are listed in Section N.15. They are not interchangeable with those used in conjunction with the Continental-type headlamps previously fitted.

Section N.44

NORTH AMERICAN SEALED-BEAM LIGHT UNITS (Minor 1000)

Cars exported to the U.S.A. now have headlamps incorporating sealed-beam light units fitted at the Works.

To change a sealed-beam light unit remove the plated headlamp rim. Slacken the three retaining screws securing the light unit rim. Rotate the rim anti-clockwise to disengage the slotted holes from the heads of the retaining screws. Pull the light unit forward and disconnect the three-pin socket to release it from the back-shell.

Section N.45

NUMBER-PLATE ILLUMINATION LAMP

To comply with Swiss lighting regulations a new type of tail lamp fitted with two bulbs has been introduced on cars for export to Switzerland. This lamp (Part No. BCA 4575) was introduced on the two-door model from Car No. 798693 and on the four-door model from Car No. 799519.

Section N.46

SIDELAMPS—FLASHER

Sidelamps (Part No. BCA 4569) with white flashers were introduced for export to Switzerland at Car No. 796860 to suit the Swiss lighting regulations.

Section N.47

HEADLAMPS

On later cars an improved type of headlamp incorporating a new type of ribbed sealing gasket was introduced. This assembly is interchangeable with earlier types of headlamp.

Section N.48

LUCAS C40-1 DYNAMO

A later-type dynamo, a Lucas C40-1, with increased output and Lucar connectors, has been introduced on engines with the numbers detailed below. A modified RB106/2 control box is fitted at the same time. The new control box must not be used with the old-type dynamo. (Engine Nos. L355590 to L355600 and from L357020 onwards. H375358 to H357400 and from H357434 onwards.)

The ignition coil bracket has also been modified.

Section N.49

DISMANTLING C40-1 DYNAMO

The instructions for dismantling the dynamo are basically the same as those given in Section N.4. The

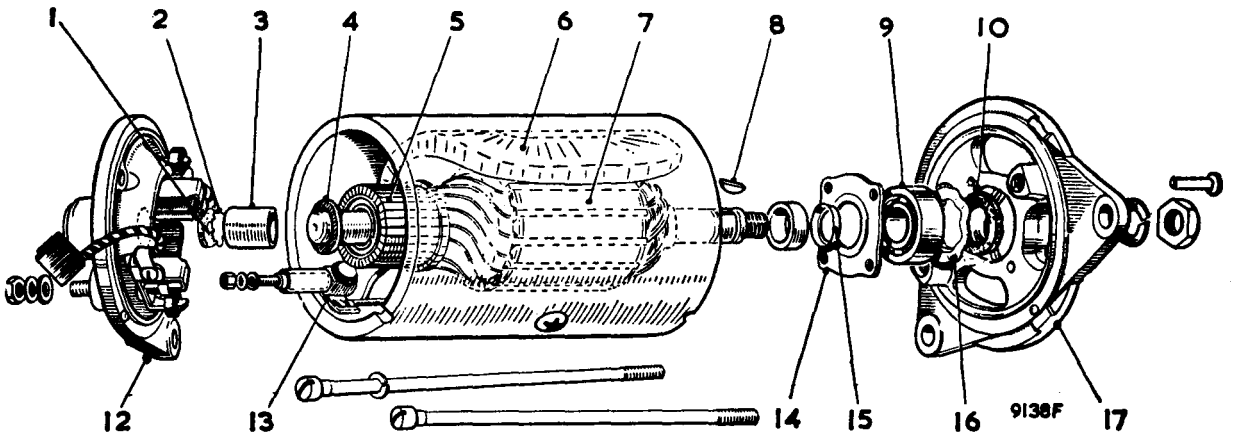

Fig. N.44

The C40–1 generator exploded

1. Oiling pad.
2. Aluminium disc.
3. Bush.
4. Fibre washer.
5. Commutator.
6. Field coils.
7. Armature.
8. Key.
9. Ball bearing.
10. Felt washer.
12. Commutator end bracket.
13. Field terminal post.
14. Bearing plate.
15. Cap washer.
16. Corrugated washer.
17. Drive end bracket.

C40–1 dynamo has a windowless yoke and is therefore not fitted with a cover band.

Access to the brushes is obtained by removing the commutator end bracket.

Section N.50

SERVICING C40–1 DYNAMO

The instructions for servicing the dynamo are generally the same as given in Section N.5, with the following exceptions.

Brushes

The minimum permissible length of a worn brush is $\frac{5}{16}$ in. (7·14 mm.). Badly worn brushes must be renewed and the new brushes bedded to the commutator. The correct spring tension is 30 oz. (·85 kg.), maximum, on a new brush, and 13 oz. (·37 kg.), minimum, on a brush worn to $\frac{5}{16}$ in. (7·14 mm.).

Commutator

The later type of commutator is moulded, and may be reskimmed to a minimum diameter of 1·450 in. (36·8 mm.). The undercut must conform to the following dimensions:

Width	..	·040 in. (1·016 mm.).
Depth	..	·020 to ·035 in. (·508 to ·889 mm.).

It is important that the sides of the undercut clear the moulding material by a minimum of ·015 in. (·381 mm.).

Field coil

The resistance of the field coil is 6·0 ohms.

Bearings

To remove the bearing bush in the commutator end plate screw a $\frac{5}{8}$ in. tap squarely into the bush and withdraw the bush; then remove the felt ring and its retainer.

When refitting the bearing plate to the front bracket insert the rivets from the outer face of the bracket.

The part numbers of the new components are as follows:

Dynamo, Lucas Type C40–1	.. ..	13H 219
Ignition coil bracket	.. .. ..	12H 51
Control box, Lucas Type RB106/2	..	3H 1836

Section N.51

MODIFIED RB106/2 CONTROL BOX

The instructions for adjusting the modified Lucas Type RB106/2 control box are as follows.

Regulator adjustment

The electrical setting of the control unit can be checked without removing the cover. Use a good-quality moving-coil voltmeter (0 to 20 volts).

Remove the cables from the control box terminals 'A' and 'A1' and connect the cables together.

Connect the negative lead of the voltmeter to the control box terminal 'D' and connect the other lead to the terminal 'E'.

Run the dynamo at 3,000 r.p.m. and watch the voltmeter reading, which should be between the limits given below, according to the ambient temperature.

Ambient temperature	*Open-circuit voltage*
10° C. (50° F.)	16·1 to 16·7
20° C. (68° F.)	16·0 to 16·6
30° C. (86° F.)	15·9 to 16·5
40° C. (104° F.)	15·8 to 16·4

An unsteady voltmeter reading may be due to dirty contacts, but if the reading is outside the appropriate limits the regulator must be adjusted.

Switch off the engine, remove the control box cover, restart the engine, and run the dynamo at 3,000 r.p.m. Turn the regulator adjusting screw (1, Fig. N.45) in a clockwise direction to raise the setting or in an anti-clockwise direction to lower the setting.

NOTE.—The operations of checking and adjusting the regulator should be completed within 30 seconds, otherwise false readings and settings, due to the heating of the shunt coil, will be made.

After adjustment a further check of the setting should be made by switching off and restarting the engine and then raising the dynamo speed to 3,000 r.p.m., when the open-circuit voltage must conform to the figures stated.

Refit the control box cover and restore the original connections.

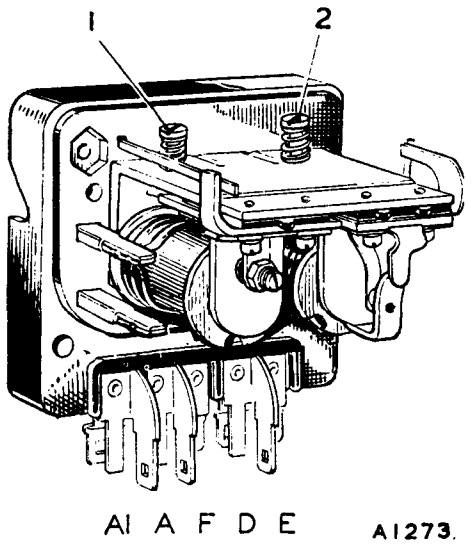

Fig. N.45

RB106/2 modified control box

Cut-out adjustments

To check the voltage at which the cut-out operates remove the control box cover and connect the voltmeter between terminals 'D' and 'E'.

Start the engine and slowly increase speed until the cut-out contacts are seen to close, noting the voltage at which this occurs; it should be 12·7 to 13·3 volts.

An alternative method of determining the exact point of contact closure is to switch on an electrical load, such as a pair of headlamps, when the instant of contact closure will be indicated by a slight flick of the voltmeter pointer.

If the cut-out operates outside the above limits it will be necessary to adjust it to within the limits. To do this turn the adjusting screw (2, Fig. N.45) in a clockwise direction to raise the setting or in an anti-clockwise direction to reduce the setting.

Turn the screw only a fraction of a turn at a time, and test the setting after each adjustment by increasing the engine speed from zero and noting the voltmeter reading at the instant of contact closure.

NOTE.—Like the regulator, the setting of the cut-out must be carried out as quickly as possible to avoid errors due to the heating of the shunt coil.

Having set the cut-in voltage correctly, the drop-off setting should be checked, and adjusted if necessary so that the instant of contact opening occurs between 8·5 and 11·0 volts.

To check the voltage at which the contacts open remove the control box cover, disconnect the cables from the control box terminals 'A' and 'A1', and join these cables together. Connect the voltmeter between terminal 'A1' and earth; start the engine and run up to speed.

Decelerate the engine slowly and watch the voltmeter pointer, which will return to zero immediately the contact points open. The opening of the contacts should occur between 8·5 and 11·0 volts.

Should the opening of the contacts occur outside these limits, the setting of the fixed contact must be adjusted.

Using a pair of thin-nosed pliers, carefully bend the fixed contact blade towards the bobbin to reduce the drop-off voltage, or away from the bobbin to increase the drop-off voltage. After each adjustment, which should be very small, test the setting as previously described and readjust as necessary.

Restore the original connections and refit the cover.

Section N.52

MODIFIED NORTH AMERICAN SEALED-BEAM LIGHT UNITS (Minor 1000)

A new, improved type of sealed-beam light unit is being fitted to the headlamps of cars exported to the U.S.A., and it is identified by the figure '2' moulded into the lens at the 12 o'clock position. These headlamps must be aimed and set with the beams in the dip position, with the setting carried out in accordance with the regulations of the state in which the vehicle is used.

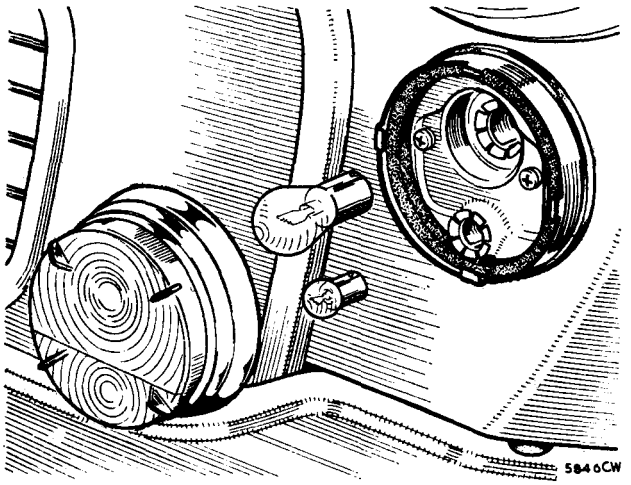

Fig. N.46

The pilot and flasher lamp with the lens removed to show the four lens-retaining catches on the lamp body (later models)

Section N.53

PILOT AND FRONT FLASHING INDICATOR LAMPS
(Later Models)

To obtain access to either bulb press the lamp front inwards and turn it anti-clockwise until it is free to be withdrawn. Reverse this movement to replace the front. Both bulbs are of the bayonet-type fixing.

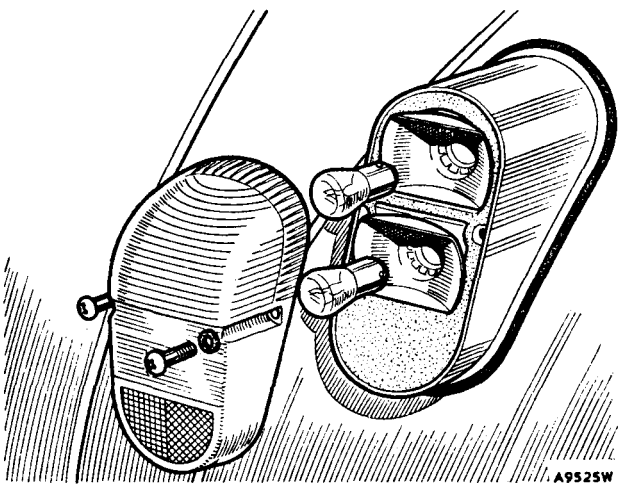

Fig. N.47

The rear lamp on later Saloon and Convertible models. Remove the two screws to gain access to the bulbs

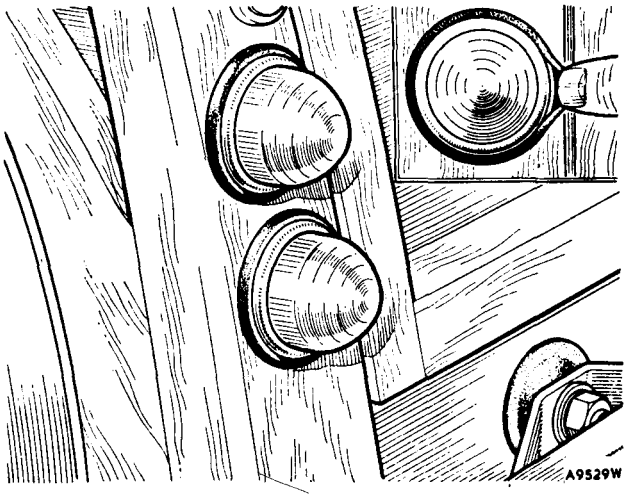

Fig. N.48

The rear lamps on later Traveller models. Turn back the rubber sealing flanges to gain access to the lamp bulbs. The upper (amber) lamp is the flashing indicator

Section N.54

STOP, TAIL, AND DIRECTION INDICATOR LAMPS
(Later Traveller Models)

To remove the bulbs for replacement, fold back the rubber flange and withdraw the plated rim and lamp glass. Only the fingers should be used to fold back the rubber flange.

Section N.55

STOP, TAIL, AND DIRECTION INDICATOR LAMPS
(Later Saloon and Convertible Models)

Access to the bulbs is obtained by withdrawing the two screws holding the lens cover. Ensure that the rubber washers are refitted on replacement.

WIRING DIAGRAM (Models with Separate Flashing Equipment)

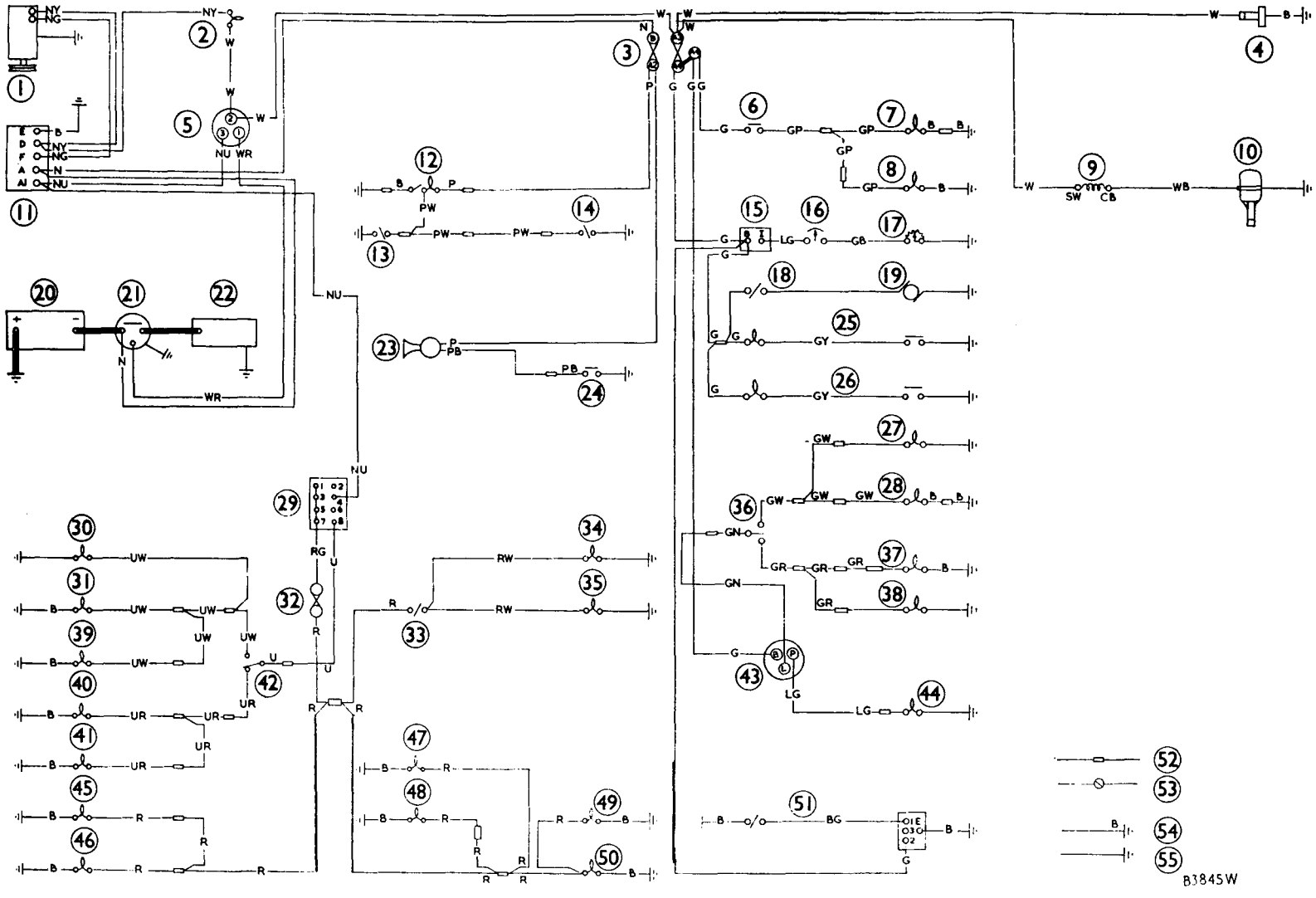

KEY TO WIRING DIAGRAM (Models with Separate Flashing Equipment)

No.	*Description*
1.	Dynamo.
2.	Ignition warning light.
3.	Fuse unit.
4.	Fuel pump.
5.	Ignition and starter switch.
6.	Stop lamp switch.
7.	R.H. stop lamp.
8.	L.H. stop lamp.
9.	Ignition coil.
10.	Distributor.
11.	Control box.
12.	Interior light and switch (when fitted).
13.	Courtesy light switch (when fitted).
14.	Courtesy light switch (when fitted).
15.	Instrument voltage stabilizer.
16.	Fuel gauge.
17.	Fuel tank unit.
18.	Heater switch (when fitted).
19.	Heater (when fitted).
20.	12-volt battery.
21.	Starter solenoid switch.
22.	Starter motor.
23.	Horn.
24.	Horn-push.
25.	Oil filter warning light and switch (when fitted).
26.	Oil pressure warning light and switch.
27.	R.H. front flasher.
28.	R.H. rear flasher.
29.	Lighting switch.
30.	Main-beam warning light.
31.	R.H. headlamp main beam.
32.	Line fuse (10-amp.).
33.	Panel light switch.
34.	Panel light.
35.	Panel light.
36.	Flasher switch.
37.	L.H. rear flasher.
38.	L.H. front flasher.
39.	L.H. headlamp main beam.
40.	R.H. headlamp dip beam.
41.	L.H. headlamp dip beam.
42.	Dipper switch.
43.	Flasher unit.
44.	Flasher warning light.
45.	L.H. pilot lamp.
46.	R.H. pilot lamp.
47.	R.H. tail lamp.
48.	L.H. tail lamp.
49.	Number-plate lamp.
50.	Number-plate lamp.
51.	Windscreen wiper switch and motor—earthed to control box terminal 'E'.
52.	Snap connectors.
53.	Terminal blocks or junction box.
54.	Earth connections made via cable.
55.	Earth connections made via fixing bolts.

NOTE.—Twin number-plate lamps fitted to Traveller models only

CABLE COLOUR CODE

B.	Black.	P	Purple.	Y.	Yellow.
U.	Blue.	R.	Red.	D.	Dark
N.	Brown.	S.	Slate.	L	Light.
G.	Green.	W.	White.	M.	Medium.

When a cable has two colour code letters the first denotes the main colour and the second denotes the tracer colour.

WIRING DIAGRAM (Models with Alternator)

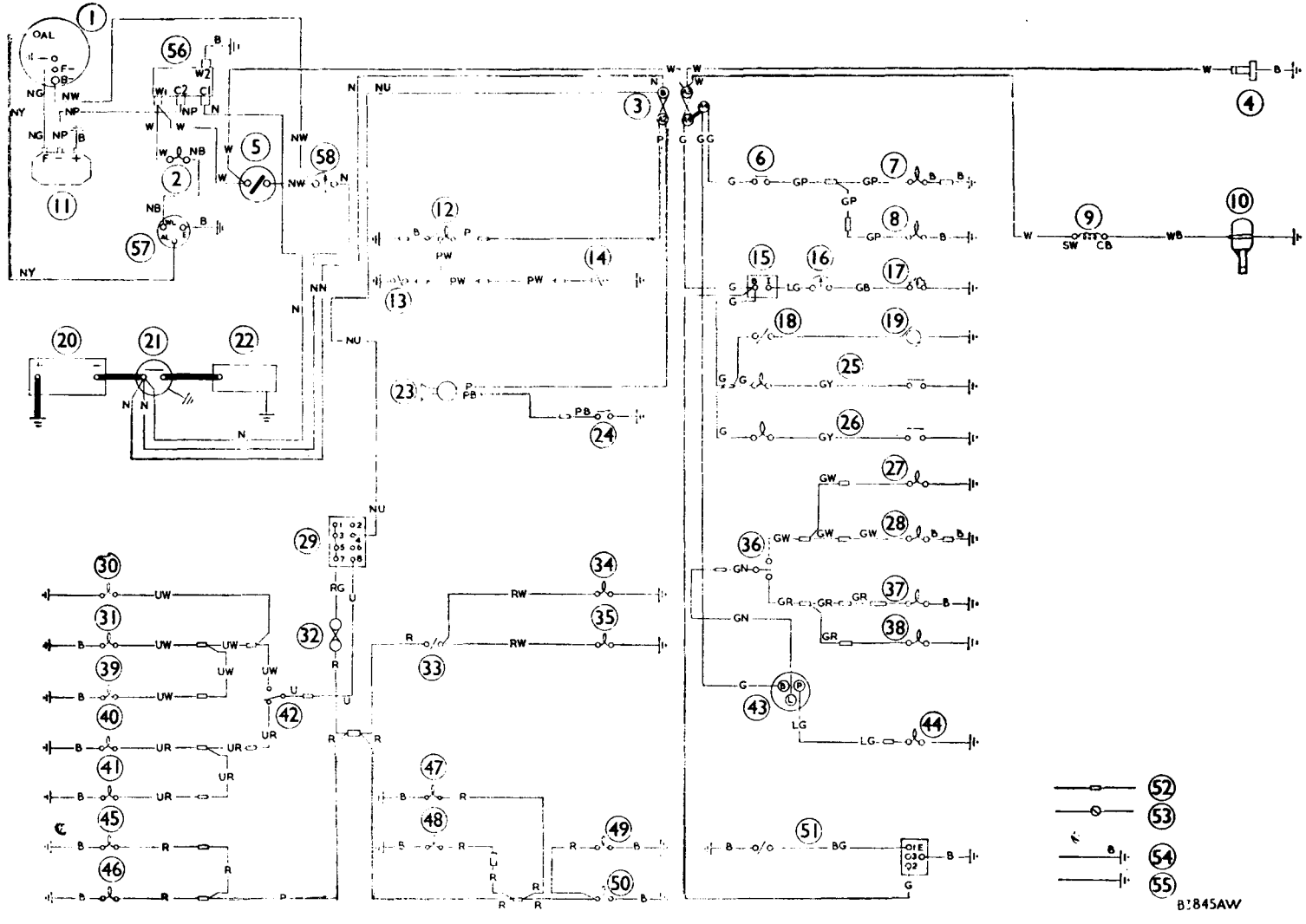

KEY TO WIRING DIAGRAM (Models with Alternator)

No.	Description
1.	Alternator—11AC.
2.	Charging warning light.
3.	Fuse unit.
4.	Fuel pump.
5.	Ignition and starter switch.
6.	Stop lamp switch.
7.	R.H. stop lamp.
8.	L.H. stop lamp
9.	Ignition coil.
10.	Distributor.
11.	Control unit—4TR.
12.	Interior light and switch (when fitted).
13.	Courtesy light switch (when fitted).
14.	Courtesy light switch (when fitted).
15.	Instrument voltage stabilizer.
16.	Fuel gauge.
17.	Fuel tank unit.
18.	Heater switch (when fitted).
19.	Heater (when fitted).
20.	12-volt battery.
21.	Starter solenoid switch.
22.	Starter motor.
23.	Horn.
24.	Horn-push.
25.	Oil filter warning light and switch (when fitted).
26.	Oil pressure warning light and switch.
27.	R.H. front flasher.
28.	R.H. rear flasher.
29.	Lighting switch.
30.	Main beam warning light.
31.	R.H. headlamp main beam.
32.	Line fuse (10-amp.).
33.	Panel light switch.
34.	Panel light.
35.	Panel light.
36.	Flasher switch.
37.	L.H. rear flasher.
38.	L.H. front flasher.
39.	L.H. headlamp main beam.
40.	R.H. headlamp dip beam.
41.	L.H. headlamp dip beam.
42.	Dipper switch.
43.	Flasher unit.
44.	Flasher warning light.
45.	L.H. pilot lamp.
46.	R.H. pilot lamp.
47.	R.H. tail lamp.
48.	L.H. tail lamp.
49.	Number-plate lamp.
50.	Number-plate lamp.
51.	Windscreen wiper switch and motor—earthed to control box terminal 'E'.
52.	Snap connectors.
53.	Terminal blocks or junction box.
54.	Earth connections made via cable.
55.	Earth connections made via fixing bolts.
56.	Relay—6RA.
57.	Warning light unit—3AW.
58.	Ammeter (when fitted).

NOTE.—Twin number-plate lamps fitted to Traveller models only.

CABLE COLOUR CODE

B. Black	P. Purple.	D. Dark.
U. Blue.	R. Red.	L. Light.
N. Brown.	W. White.	M. Medium.
G. Green.	Y. Yellow.	

When a cable has two colour code letters the first denotes the main colour and the second denotes the tracer colour.

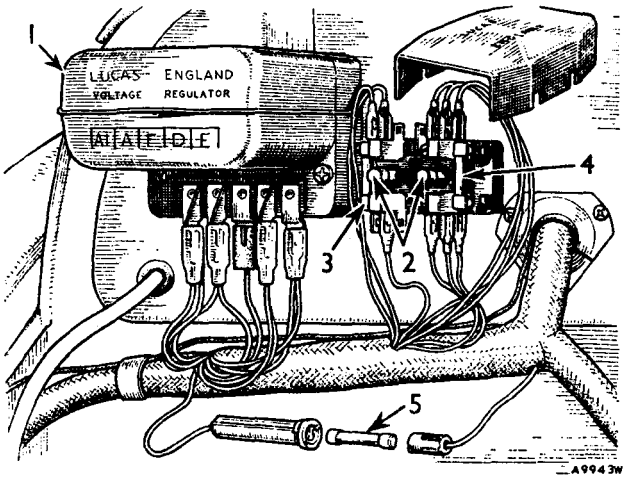

Fig. N.49
The regulator and fuses (later models)

1. Regulator cover.
2. Spare fuses.
3. 'AUX.' fuse (35-amp.).
4. 'AUX. IGN.' fuse (35-amp.).
5. Pilot and tail light fuse.

Section N.56

IGNITION AND STARTER SWITCH
(Later Models)

This is of the rotary barrel-type Yale lock located on the fascia panel and operated by a detachable key. The first turn of the key in a clockwise direction switches on the ignition. Further rotation of the key in the same direction, against a slight resistance, switches the current to a solenoid located near the battery and operates the starter.

To remove and replace

(1) Remove the earth lead from the battery.
(2) Disconnect the clip surrounding the switch body behind the fascia.
(3) Disconnect the cables from the switch terminals.
(4) Withdraw the switch from the fascia.

Replacement is a reversal of the removal procedure.

Section N.57

BI-METAL RESISTANCE-TYPE FUEL GAUGE

Description

The bi-metal resistance equipment for the fuel gauge consists of an indicator head and transmitter unit connected to a voltage stabilizer. The indicator head operates on a thermal principle, using a bi-metal strip surrounded by a heated winding, and the transmitter unit is of a resistance type. The system by which the equipment functions is voltage-sensitive, and the voltage stabilizer is necessary to ensure a constant supply of a predetermined voltage to the equipment.

Fault analysis

Voltage stabilizer

Check the mean voltage, which should be 10 volts, between the output terminal 'I' and earth; if faulty, fit a new stabilizer.

Indicator

Check for continuity between terminals with wiring disconnected; if faulty, fit a new indicator.

Transmitter

Check for continuity between terminal and case with lead disconnected; if faulty, fit a new transmitter.

Wiring

Check for continuity between units. Check for leak to earth. Check for short-circuits to earth on the wiring to the transmitter. Check terminal wiring for security, earth connections, and wiring continuity. Check that the voltage stabilizer and transmitter are earthed.

Section N.58

FUSES
(Later Models)

Later models are fitted with a 10-amp. fuse in the pilot and tail light circuit. This fuse is held in the cylindrical tube alongside the wiring loom beneath the regulator. To renew the fuse (see Fig. N.49), hold one end of the tube, push in, twist, and pull off the other end. The fuse is then accessible.

Section N.59

U.K. TYPE SEALED-BEAM LIGHT UNITS
(Minor 1000)

To change a U.K. type sealed-beam light unit remove the lamp rim by releasing the rim retaining screw at the bottom of the rim assembly. Remove the three retaining screws securing the inner lamp rim and remove the rim assembly. Pull the unit forward and disconnect the three-pin socket to release it from the back-shell.

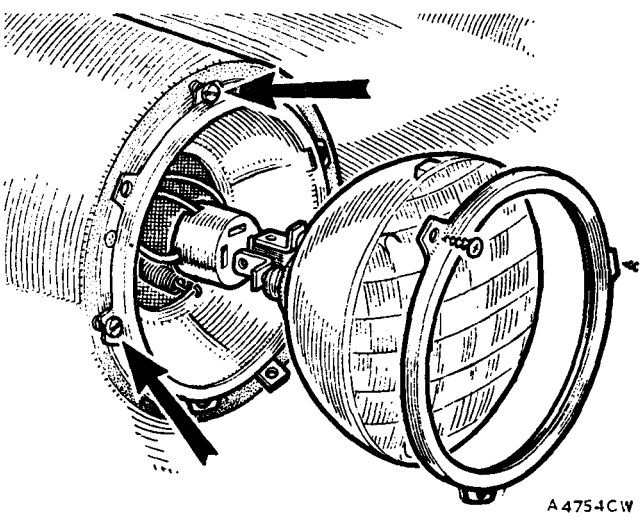

Fig. N.50
The U.K. sealed-beam headlamp with the beam-adjusting screws indicated by the arrows

Section N.60

TESTING THE ALTERNATOR CHARGING CIRCUIT IN POSITION

Alternator

(1) Check that battery voltage is reaching the brush gear by disconnecting the two cables from the alternator field terminals, connecting a voltmeter between the two cables and running the engine. The voltmeter should register battery voltage. If no reading is obtained, check the field circuit wiring.

(2) To check the alternator output, stop the engine and disconnect the positive battery terminal. Connect an ammeter between alternator terminal 'B' and its two cables. Connect the alternator field terminals to the battery terminals. Re-connect the battery positive terminal, start the engine and gradually increase its speed to give an alternator speed of approximately 4,000 r.p.m. The ammeter should register approximately 40 amps.

If a zero reading is obtained, check the brush gear and repeat the test. If a zero reading is still obtained, remove and dismantle the alternator. If a low reading is obtained, check the wiring connections and repeat the test. If a low reading is still obtained proceed with test (3).

(3) Stop the engine and connect a low range voltmeter between the alternator terminal 'B' and the battery negative terminal. Start the engine and note the voltmeter reading. Transfer the voltmeter connections to the alternator frame and the battery positive terminal and again note the voltmeter reading. If either of the two readings exceeds ·5 volt there is a high resistance in the charging circuit. Trace and rectify the fault. If there is no undue resistance, and the output is low, remove and dismantle the alternator.

Control unit

(1) Check the resistance of the wiring circuits of the alternator, control unit, and battery to control unit, including the relay unit. The resistance should not exceed ·1 ohm.

NOTE.—Do not use an ohmmeter of the type which incorporates a hand-driven generator when checking the rectifiers or transistors.

(2) Check that the battery is fully charged.

(3) Check the voltage output as follows:

(*a*) Connect an accurate voltmeter across the battery terminals and note the reading.

(*b*) Connect an ammeter between the alternator main cable and its terminal 'B' on the alternator.

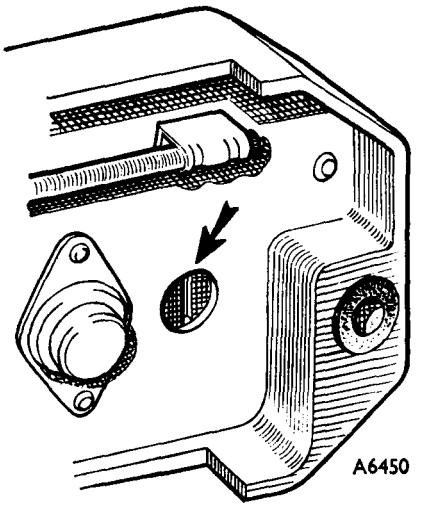

Fig. N.51

The control unit potentiometer

(*c*) Switch on enough lights to give a load of 2 amps.

(*d*) Start the engine and run for at least eight minutes at an alternator speed of 3,000 r.p.m. until the ammeter reads 10 amps.

(*e*) The voltmeter reading should then be between 13·9 and 14·3 volts. If the reading is unstable or has not risen above the battery voltage, renew the control unit. If the reading is stable but outside the correct limits, adjust the control unit.

(4) If adjustment is needed proceed as follows:

(*a*) Stop the engine, and detach the control unit from its mountings.

(*b*) Scrape out the compound sealing the potentiometer adjustment at the back of the unit.

(*c*) Ensure the connections on the unit are secure and re-start the engine.

(*d*) Run the engine to give an alternator speed of 3,000 r.p.m., with the conditions of test as in (3).

(*e*) Turn the adjuster slot gradually until the voltmeter registers a stable reading within the correct voltage limits. Only a small adjuster movement is needed to effect an appreciable difference in the voltmeter reading.

(*f*) Re-check by stopping the engine, re-starting it and running the alternator at 3,000 r.p.m. Check the voltmeter reading, and when it is correct, refit the control unit and remove the voltmeter and ammeter. Do not attempt to re-seal the adjuster hole. Application of undue heat will damage the control unit.

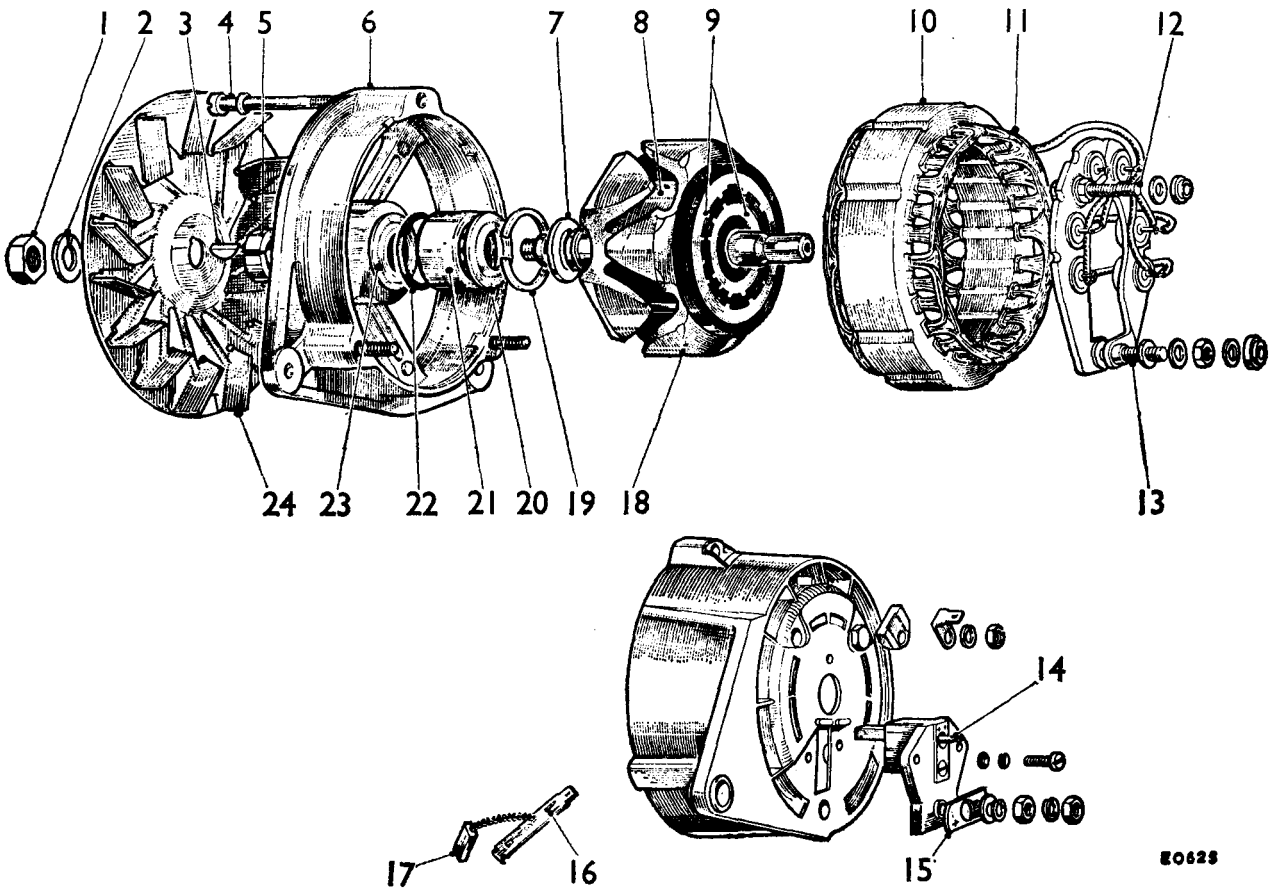

Fig. N.52

Alternator components—Lucas 11AC

1. Shaft nut.
2. Spring washer.
3. Key.
4. Through-bolt.
5. Distance collar.
6. Drive end bracket.
7. Jump ring shroud.
8. Rotor (field) winding.
9. Slip-rings.
10. Stator laminations.
11. Stator windings.
12. Warning light terminal.
13. Output terminal.
14. Field terminal blade.
15. Output terminal plastic strip.
16. Terminal blade retaining tongue.
17. Brush.
18. Rotor.
19. Bearing circlip.
20. Bearing retaining plate.
21. Ball bearing.
22. 'O' ring oil seal.
23. 'O' ring retaining washer.
24. Fan.

Relay unit

(1) To test the relay unit remove the lead from relay unit terminal 'C2' and connect to terminal 'C1'.

(2) Connect an ammeter between alternator terminal 'B' and its two cables.

(3) Start the engine and check the alternator output. If the output is satisfactory, renew the relay unit.

Section N. 61

REMOVING AND REPLACING THE ALTERNATOR

Disconnect the battery and detach the electrical leads from the alternator. Slacken the alternator securing bolts, push the alternator towards the engine and detach the driving belt from the alternator pulley. Remove the securing bolts and detach the alternator from the engine.

Replacement is a reversal of the above procedure. The driving belt must be tensioned so that a deflection of ⅛ in. (3·18 mm.) can be obtained under finger pressure at the mid-point of the longest run of the belt. DO NOT apply leverage to any point of the alternator other than the front mounting bracket, or run the engine with the battery or alternator disconnected.

Section N.62

11AC ALTERNATOR

Dismantling

(1) Remove the securing nut and detach the drive pulley, fan, and key from the armature shaft.

(2) Mark the relative positions of the drive end bracket, the stator lamination pack, and the slip-ring end bracket for replacement purposes.
(3) Remove the through-bolts and detach the drive end bracket and rotor.
(4) Press the rotor out of the drive end bracket.
(5) Remove the terminal nuts, brush box retaining screws, and the heat sink bolt. Withdraw the stator and heat sink from the slip-ring end bracket.
(6) Close the retaining tongues on the brush terminal blades and withdraw the terminals from the brush box.

Overhauling

(7) Check the brush length. If they are worn below the permissible limit (see **'GENERAL DATA'**) renew them. Check that the spring tension is as given in **'GENERAL DATA'**. Renew the springs if they are below the stated limits.
(8) Clean the slip rings with petrol (gasoline), or if they are burned, with fine glass paper. The slip rings must not be machined.
(9) Test the resistance or current flow of the field winding using an ohmmeter or a 12-volt D.C. supply and an ammeter. The resistance should be 3·77±·18 ohms, and the current flow 3·2 amps.
(10) Test the insulation of the windings by connecting a 110-volt A.C. supply and a 15-watt test lamp between one of the rotor poles and each of the slip rings in turn.
(11) Disconnect the three cables from the heat sink taking care not to overheat the diodes or bend the diode pins. Test the continuity of the windings by using a 12-volt D.C. supply and a 1·5-volt test lamp connected in series with any two of the cables, then repeating the test using the third cable in place of either one of the first two. Test the insulation by connecting a 110-volt A.C. supply and a 15-watt test lamp between one of the three cables and the lamination pack.
(12) Test each diode by connecting a 12-volt D.C. supply and a 1·5 watt test lamp in series with each diode in turn as shown in Fig. N.53, and then reversing the connections. Current should flow in one direction only.
(13) Remake the cable connections to the heat sink using 'M' grade 45—55 tin-lead. Take care not to overheat diodes or bend the pins. Secure the inter-connections in the positions shown in Fig. N.54 using a high temperature resistant adhesive.
(14) Check that the bearings do not allow excessive side-float of the armature shaft. If the needle bearing is faulty, the slip ring end bracket and bearing must be renewed as a complete assembly. If the ball bearing is faulty, renew the bearing, packing the new bearing with high-melting point grease.

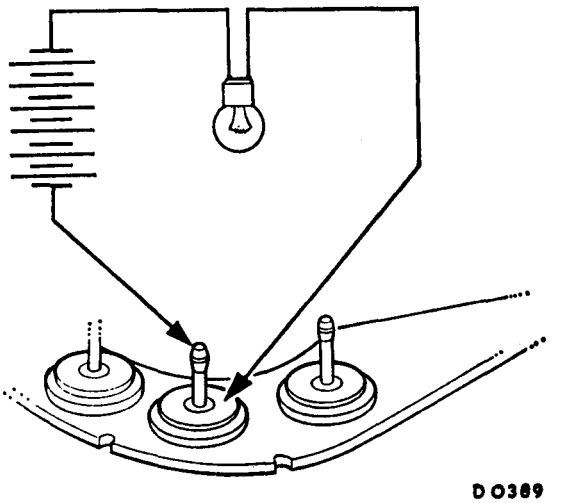

Fig. N.53
Testing the diodes

Reassembling

(15) Reverse the procedure in (1) to (6), bending the retaining tongues of the field terminal blades out at an angle of 30° before fitting. Tighten the through-bolts, brush box fixing screws, and diode heat sink fixings to the correct torque figures (see **'GENERAL DATA'**).

Section N.63

SERVICE PRECAUTIONS

The following precautions must be observed when dealing with vehicles fitted with an alternator.

(1) When fitting a replacement alternator ensure that it is of the same polarity as the original. Terminal polarity is clearly marked.
(2) Do not reverse the battery connections. This will damage the alternator rectifiers. Connect up the earth terminal of the battery first.
(3) If a high-rate battery charger is used to charge the battery in position in the vehicle, damage will occur to the regulator if the ignition/starter switch is turned on. Detach the connectors from the

regulator as a safety measure before boost-charging. Re-connect after charging.

(4) When starting an engine with the aid of a high-rate charger, detach the connectors from the regulator prior to using the charger. Do not re-connect the regulator until the charger is disconnected, and the engine is running at idling speed.

(5) The battery must never be disconnected while the engine is running, nor must the alternator be run with the main output cable disconnected either at the alternator end or the battery end.

(6) The cable connecting the battery and alternator is 'live' even when the engine is not running. Take care not to earth the alternator terminal or the cable end if removed from the terminal.

Do not make or break any connections in the alternator circuit while the engine is running.

(7) Disconnect the alternator and regulator as a safety precaution when arc-welding on the vehicle.

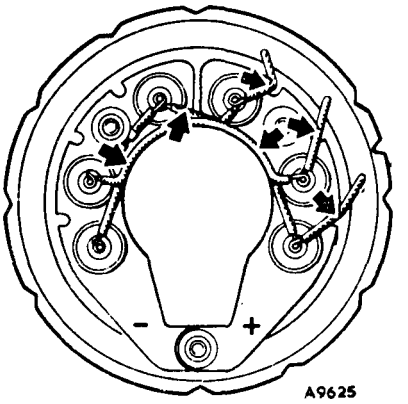

Fig. N.54
The heat sink diode internal connections

SECTION O

THE WHEELS AND TYRES

Section O.1

GENERAL

Tyre pressures

It is of the utmost importance that the tyres be carefully maintained at the following recommended pressures:

Front: 22 lb./sq. in. (1·6 kg./cm.^{2}).

Rear (normal): 22 lb./sq. in. (1·6 kg./cm.^{2}).

When carrying four passengers and luggage the rear tyres should be inflated to 24 lb./sq. in. (1·7 kg./cm.^{2}).

Spare wheel

The spare wheel is carried in a separate compartment beneath the trunk lid and is secured in position by a special bolt and clamp plate which must be removed before the wheel can be withdrawn. Keep the tyre inflated to 24 lb./sq. in. (1·7 kg./cm.^{2}).

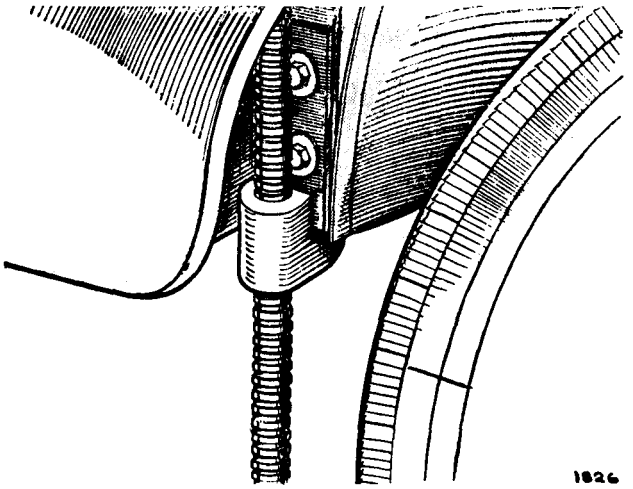

Fig. O.1

When using the jack to raise a front wheel make sure that the claw of the jack is in proper engagement with the bottom of the special jacking plate

Jack

When using the special jack apply the hand brake and place chocks on each side of two wheels which are not to be raised from the ground.

To raise a front wheel engage the jack immediately below the two bolt heads visible inside the rear of the front wheel arch. Place the jack in position and turn the shaft by hand until the claw is engaged. Insert the tommy-bar in the hole provided in the lower end of the shaft and continue to turn until the wheel is clear of the ground.

To raise a rear wheel the jack must engage the special plate on the chassis beneath the wheel arch to the rear of the wheel.

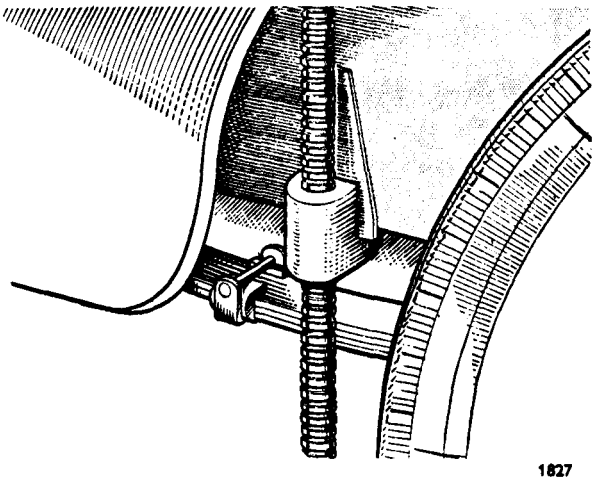

Fig. O.2

In the case of the rear wheel similar precautions must be taken. In this case the special jacking plate is more obvious

Road wheels—removal and replacement

Remove the hub cover by inserting the flattened end of the wheel nut spanner in the recess provided adjacent to the retaining studs and giving it a sideways twist.

Remove the four bolts securing the road wheels to the hub. The wheel bolts have right-hand threads, i.e. turn clockwise to tighten and anti-clockwise to remove. Lift the road wheel from the hub.

Reverse the procedure when replacing the road wheel and ensure that the wheel bolts are tight. **This is important.**

To refit the hub disc the rim should be placed over two of the buttons on the wheel centre and the outer face given a sharp blow of the fist over the third button.

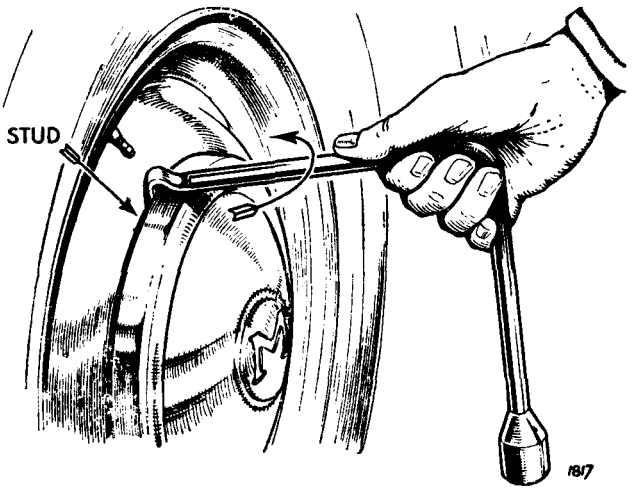

Fig. O.3

The wheel hub disc is removed by using the flattened end of the wheel nut brace and giving it a sideways motion

Valves

Valve caps, in addition to preventing dirt from entering the valve, form a secondary air seal and should always be fitted. The valves may be tested for air-tightness by rotating the wheel until the valve is at the top and inserting its end in water. If bubbles appear the seating is faulty and should be removed and replaced by a new one. It is advisable to change the valve interiors every 12 months.

Tyre wear

Even tyre wear is promoted by changing the positions of the wheels and tyres on the car at intervals (Fig. O.18).

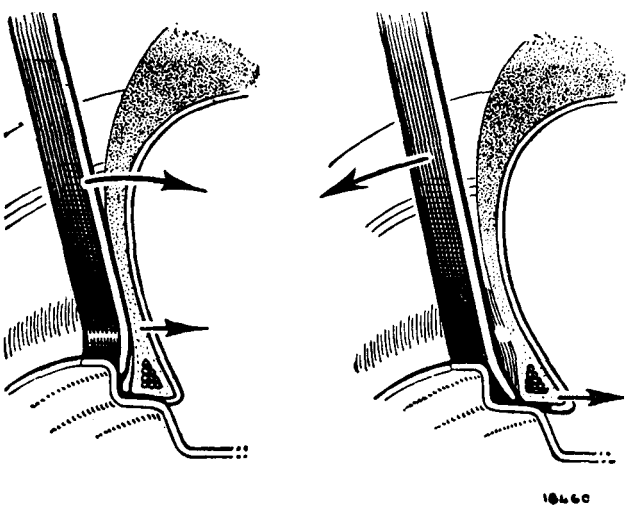

Fig. O.4

In cases where difficulty is encountered in moving the bead into the well-base the tyre lever should be inserted between the rim edge and the bead as indicated in Fig. O.4 and the lever pushed towards the tyre as indicated. A second tyre lever should now be inserted next to the first in the space between the rim edge and the bead, with its curved end against the rim, and pulled outwards

Attention should be paid to the following points with a view to obtaining the maximum mileage from the tyre equipment of the vehicle.

Test the pressures of the tyres daily by means of a suitable gauge and restore any air lost. It is not sufficient to make a visual examination of the tyre for correct inflation. Inflate the spare wheel to the correct rear wheel pressure at the same time.

Should any tyre appear to lose an appreciable amount of air between short intervals, have it removed and checked for air leaks.

Regularly remove and examine covers and tubes. Keep the treads free from grit and stones and arrange for any repairs to be carried out. Clean the wheel rims and keep them free of rust.

Paint the wheels if required, and replace the tyres and tubes. Keep the brakes and clutch adjusted correctly and in good order. Fierceness or uneven action in either of these units has a destructive effect on the tyres.

Misalignment is a very costly error. Suspect it if rapid wear of the front tyres is noticed and correct the fault at once. See Section J for details of front wheel alignment.

Keep oil and grease off the tyres. Should the tyres get oily, petrol should be applied sparingly and wiped off at once.

NOTE.—Inextensible wires are incorporated in the edges of wired-type tyres. Do not, therefore, attempt to stretch edges of the tyres cover over the rim edge.

Force is entirely unnecessary and detrimental as it tends to damage the wire edges and serves no useful purpose. Fitting or removing is quite easy if the wire edges are carefully adjusted into the rim base; if it is found to be difficult the operation is not being performed correctly.

Section O.2

TYRE REMOVAL

Remove all valve parts to completely deflate the tyre, and free the bead from the rim in the following manner: (1) Insert a tyre lever between the rim and the bead with the curved end against the tyre and push

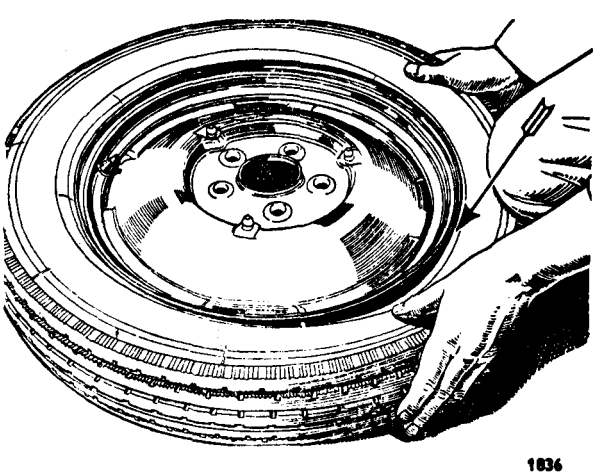

Fig. O.5

The first step in tyre removal is the pushing of the bead into the well of the rim opposite the tyre valve

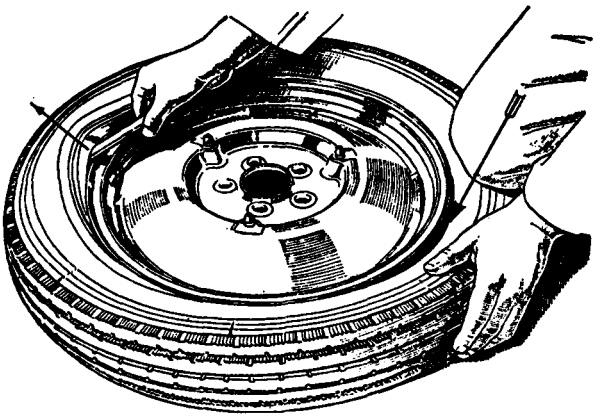

Fig. O.6

Tyre levers can then be inserted close to the tyre valve and the tyre lifted over the rim without difficulty

the lever towards the tyre. This will push the bead away from the rim edge; (2) Insert a second lever in the space provided, but with the curved end outwards, and pull this lever away from the tyre to push the bead inwards; (3) Repeat this process right round the tyre until the bead is free. Two or three circuits round the tyre may be necessary to free the bead completely. Push both edges into the base of the rim at a point diametrically opposite the valve, then lever the cover edge near the valve over the rim of the wheel (see Fig. O.6), using two levers placed about 6 in. (15 cm.) apart. Remove the tube carefully—do not pull on the valve. Stand the tyre and wheel upright, keeping the bead on the base of the rim. Lever the bead over the rim flange, and at the same time push the wheel away from the cover with the other hand.

Section O.3

IMPORTANCE OF BALANCE

In order to obtain good steering it is of importance to ensure that the wheels, with tyres fitted, are in good balance. To assist this the tyre manufacturers are now marking their tyres with white, pink, or yellow spots of the neighbourhood of the bead at the lightest point in the cover; similarly, they are marking the inner tubes with a group of coloured spots to indicate their heaviest point. When tyres are assembled care must therefore be taken to see that they are assembled with the coloured spots on the cover coinciding with the coloured spots on the tube, and not opposite to the valve as recommended hitherto.

It must be noted, in addition, that special balancing discs are sometimes fitted to the inside of the cover casing and that these should on no account be removed, as the tyre balance will be upset if this is done. These balance discs are not repair patches and do not indicate any fault in the tyre.

The maximum out-of-balance permissible on Morris Minor tyre and wheel assemblies is 28 in./oz., and rim weights to Dunlop Part Nos. WBW/1 to 7 (providing a range of weights up to 3½ oz. in steps of ½ oz.) must be added as required in order to bring the wheel assembly below this figure.

Section O.4

FITTING TYRES AND TUBES

The following procedure is recommended when fitting tyres and tubes to well-base rims:

(1) Inspect the inside of the cover carefully and remove all dirt. Inspect the wheel rim, which must be clean, free of rust, and undamaged

(2) Dust the inside of the cover evenly with french chalk.

(3) Inflate the tube until it begins to round out, then insert it in the cover.

(4) Apply a frothy solution of soap and water generously around the entire base of the tube, extending upwards between the tyre beads and the tube itself for at least 2 in. (50 mm.) on both sides. also apply the solution to the bottom and outside of the tyre beads. Do not allow the solution to run into the crown of the tyre. The solution must be strong enough to feel slippery when the fingers are wetted with the solution and rubbed together.

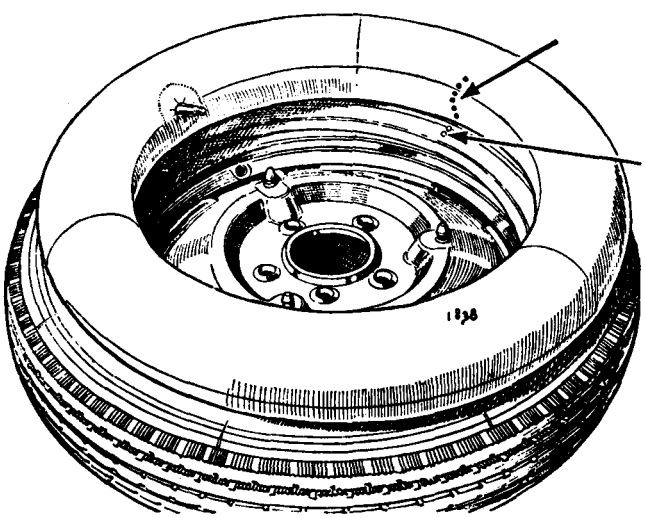

Fig. O.7

When replacing a cover and tube make sure that the balance marks on the tube and cover coincide

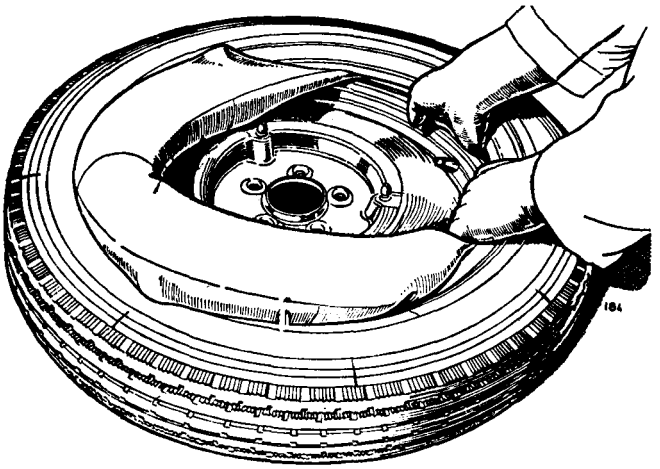

Fig. O.8

After slight inflation the tube is introduced into the cover, fitting the valve in position first

(5) Mount the tyre on the rim immediately, whilst the soap solution is still wet.

Push one edge of the cover over the edge of the rim. It will go quite easily if the part first put on is fitted on the opposite side of the valve and is pushed right down into the rim base. Move it round so that its balance spots coincide with those of the inner tube when it is inserted with the valve passing through the hole in the rim. (Take care that the valve, which is fitted in the side of the tube, is on the correct side of the rim.)

(6) Before inflating be sure that the tyre beads are clear of the well of the rim all the way round, and that the tube is not trapped between the tyre edge and the rim adjacent to the valve. To guard against this push the valve into the tyre as far as it will go before inflating.

(7) Inflate slowly until the beads are fully seated.

(8) Remove the valve core to **deflate the tube completely.**

(9) Reinflate to the correct working pressure (see page O.2). This procedure must be followed whenever a tube is fitted.

The object of the double inflation is to permit any stretched portions of the tube to readjust themselves in the cover and thus relieve any local strains in the tube.

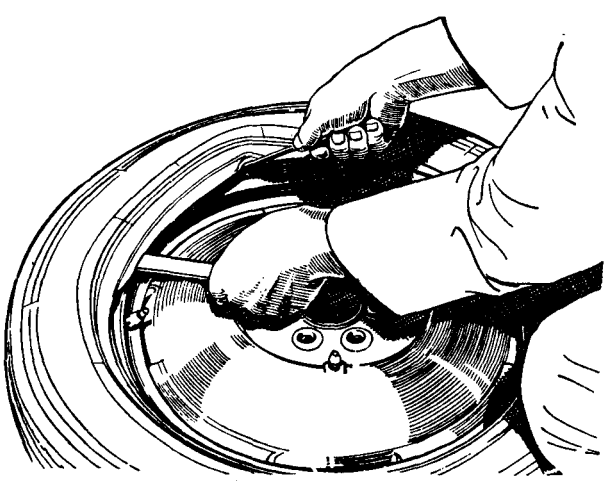

Fig. O.9

When refitting the cover start at a point diametrically opposite to the valve and finish at the valve

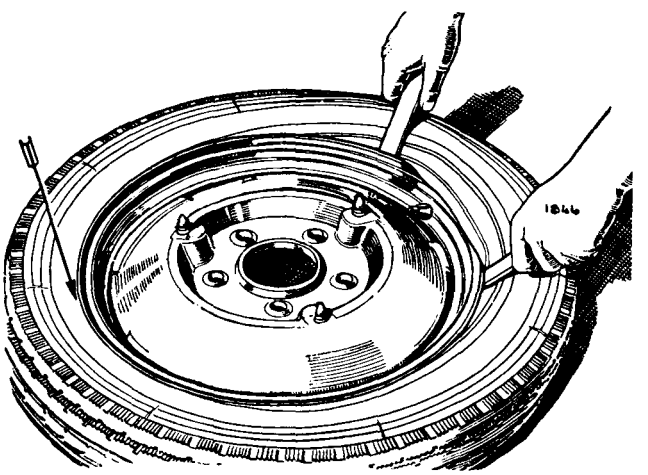

Fig. O.10

If the portion of the cover first fitted is kept in the well of the rim no difficulty will be encountered in replacing the last portion of the cover

In an emergency french chalk may be used as a substitute for the soap solution provided it is evenly and generously applied. This practice, however, is not recommended.

Repairing tubes

Punctures or injuries must be vulcanized. Ordinary patches should only be used for emergencies and cannot be relied upon.

Patches are quite useless in the case of synthetic tubes. These must be vulcanized if punctured or otherwise damaged.

Section O.5

TUBELESS TYRES

Vehicles now fitted with tubeless tyres, and which primarily were fitted with ordinary tyres, have a metal valve holder (see Fig. O.11). When tubeless tyres are

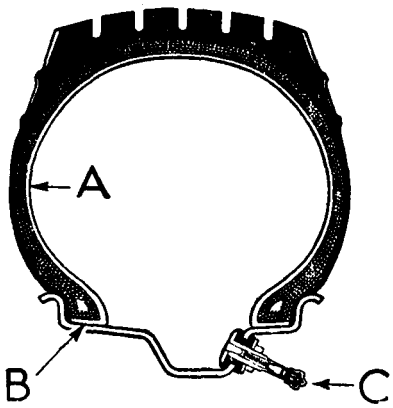

Fig. O.11

A section through a tubeless tyre

A. Air-retaining liner. B. Rubber air seal.
C. Rubber-sealed valve.

fitted as standard equipment an all-rubber valve holder (Part No. 1D 8038), together with a modified wheel, is fitted.

The tubeless tyre relies primarily on a good air seal between the tyre bead and the rim and also between the rim and the valve; the following instructions are therefore of great importance.

Rim preparation

(1) Remove by careful hammering any dents in the flange visible to the eye.
(2) Clean the flange and rim seat with steel wool, emery, or other cleaning medium and remove all foreign matter, rust, rubber, etc. Paint need not be removed, but irregularities in the surface should be smoothed out. In extreme cases of rusting it may be necessary to use a wire brush or a file.
(3) File or buff away any high-spot at the butt-weld joint.
(4) Wipe the flange and bead seat with a water-moistened cloth.

Valve fitting

Insert the valve and tighten the nut until the rubber outside the rim extends $\frac{1}{16}$ in. (1·6 mm.) beyond the metal washer between the nut and the rubber washer. Do not fit the internal parts of the valve until the tyre has been fitted to the rim.

Tyre fitting

The operations of fitting and removing the tubeless tyre to the rim are carried out in exactly the same manner as in the conventional tyre, except that there is no tube.

Much greater care is neccesary to avoid the slightest damage to the tyre bead.

(1) Before fitting moisten the beads of the tyre, the rim flange, and the tyre levers with water. **Do not use petrol.**
(2) Use thin, narrow levers in good condition, without rust and burrs. Do not widely space the levers.
(3) Finish fitting at the valve position.
(4) White balance spots on the tyre should be in line with the valve.
(5) Before inflation bounce the crown of the tyre on the ground at various points to snap the beads home against the rim and provide a partial seal.
(6) With the wheel in the upright position, inflate the tyre. If a seal cannot be obtained at the first rush of air bounce the tyre again with the air-line attached. In cases of difficulty apply a tourniquet of strong cord round the circumference of the tread and tighten.
(7) When a seal is obtained inflate until the beads are completely forced against both rim flanges. Remove the air-line, insert the valve interior, and inflate to 50 lb./sq. in. (3·52 kg./cm.^{2}) for testing.

Allow the tyre to stand for a few minutes so that any free air trapped between the flange and the bead clinch can escape. Test the complete assembly in a water tank, paying special attention to the areas at the beads, valve, and wheel rivets.

Sealing leaks located during testing

Loss of air may occur at any or all of the following points:

(1) The area of the bead seat, showing as a leak at the top of the flange.

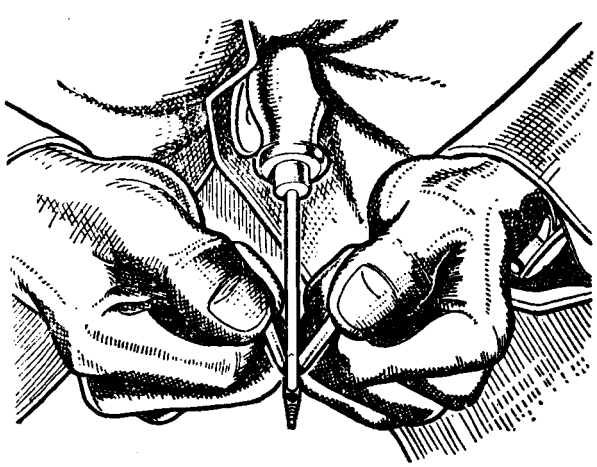

Fig. O.12

Rolling the plug into the needle eye

This is usually due to a high-spot on the rim and can often be cured by holding the bead away from the rim to allow further cleaning.

(2) The wheel rivets. In this case, and in extreme cases of leakage in the area of the bead seat (1) it is necessary to remove the tyre. Before doing so mark the position of the leak on the tyre and rim.

Loss of air at the rivets can be cured by peening over the rivet heads.

(3) The base of the valve or valve interior. Provided the valve is correctly fitted, this can be rectified by tightening the valve nut slightly.

Inflate the tyres to the correct pressure before running on the road.

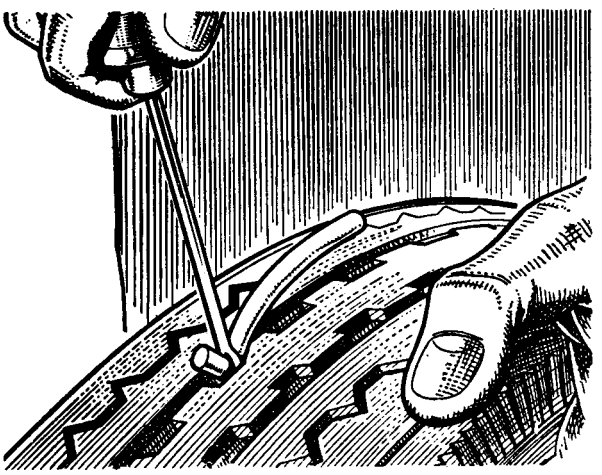

4331BW

Fig. O.13

Inserting the plug and needle through the hole in the tyre

Tyre removing

The operation does not differ from the removal of the conventional tyre and tube assembly, except that there is no tube.

Do not damage the bead.

Penetrations

Normally a tubeless tyre will not leak as the result of penetration by a nail or other puncturing object, provided that it is left in the tyre. It is, however, necessary to examine the tyres periodically and to withdraw such objects at a time when loss of air will cause least inconvenience.

Use of plugging kit. Location and preparation

If a hole fails to seal mark the spot and extract the puncturing object, taking note of the direction of penetration. If the tyre is leaking and the puncturing object

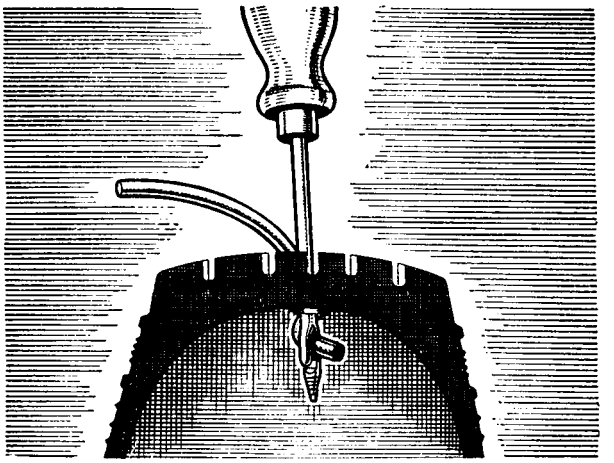

4331CW

Fig. O.14

The inserted plug prior to withdrawing the needle

cannot be located by sight it is necessary to immerse the inflated tyre in water.

Dip the needle into the flask of solution and insert through the hole, following the same direction as the penetration.

Repeat until the hole is well lubricated with solution.

Repair

Select a plug about twice the diameter of the puncturing object, stretch it, and roll it into the eye of the needle ¼ in. (6·35 mm.) from the end (Fig. O.12). After dipping the plug into the solution insert the needle into the hole and push the plug through the tyre (Figs. O.13 and O.14).

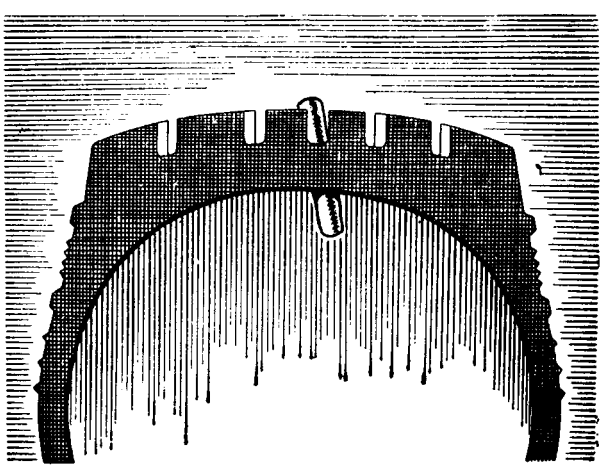

4331DW

Fig. O.15

Plug inserted into the tyre and cut off to the correct length

Withdraw the needle and cut off surplus plug about ⅛ in. (3·18 mm.) from the surface of the tread. The tyre can now be inflated and used immediately. More severe injuries which are outside the scope of simple puncture repair methods are dealt with in nearly the same way as similar injuries to conventional covers.

If the tyre deflates on the road following an unusually large penetration a tube can be fitted to enable the owner to remain on the road until it is convenient for the necessary repairs to be carried out. (The valve used for the tubeless tyre must be removed before the fitting of the tube.)

Section O.6

TUBELESS TYRE VALVES

There are two types of valve used in conjunction with tubeless tyres. The first type (Fig. O.16) is a steel one which is secured in the rim by a nut tightened down onto the convex side of a steel washer which in turn compresses the sealing rubbers. The use of soapy water or other lubricant will not assist the assembly of this valve and must be avoided.

The second type (Fig. O.16) is fitted on later wheels where the valve hole has been drilled diametrically opposite to the wheel welding, and a mushroom-headed rubber valve is utilized which must be drawn through the valve hole with the assistance of a special tool.

The valve is secured in the wheel by a small stepped flange on the rubber valve and the pressure of air inside the tyre.

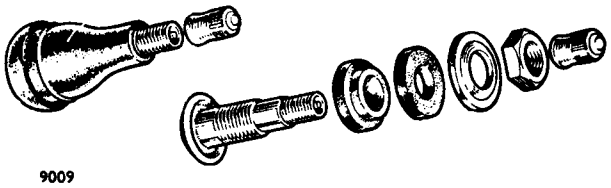

Fig. O.16
Valves for tubeless tyres

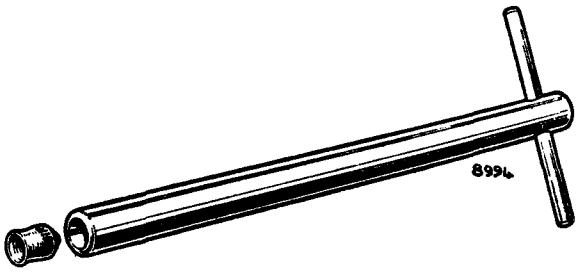

Fig. O.17
Simple tool for fitting tubeless tyre valves

A simple but effective tool (Fig. O.17) for fitting the valve can be made up from a 7 in. (177·8 mm.) length of ½ in. (12·7 mm.) steel bar or 13 S.W.G. steel tubing. Using a letter 'S' drill, in one end drill a hole to a depth of approximately ⅝ in. (15·87 mm.).

Obtain an ordinary valve dust cap and solder the cap into the drilled hole.

The opposite end of the tool requires a hole drilled about ½ in. (12·7 mm.) from the end to accept a short piece of ¼ in. (6·35 mm.) diameter rod to provide a handle.

To fit the second-type valve with the aid of the tool first liberally coat the rubber valve and the perimeter of the valve hole in the wheel with soapy water. Insert the valve into the hole and screw on the special tool. A sharp pull will seat the valve correctly.

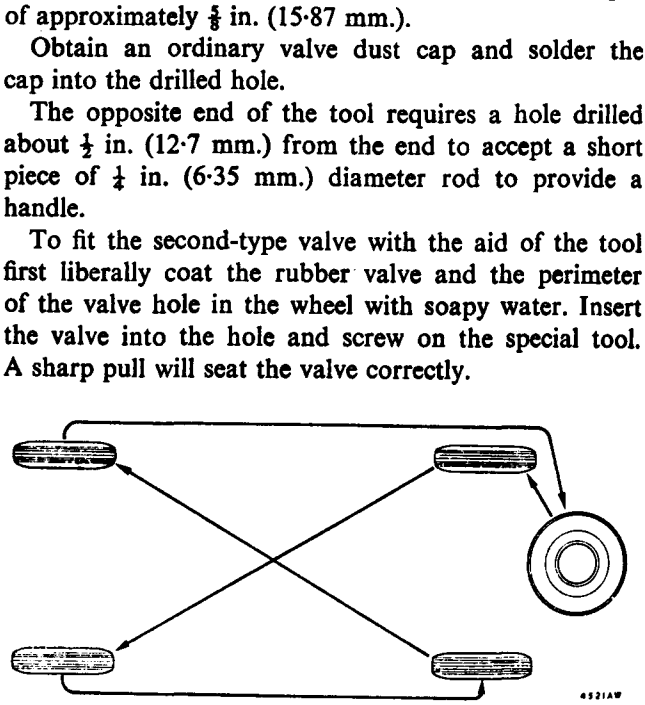

Fig. O.18
Interchanging road wheels to regularize tyre wear

SECTION P

LUBRICATION

OF THE MORRIS MINOR (Series MM)

Lubrication of the items detailed in this Section should be carried out at the intervals specified in the Driver's Handbook, Passport to Service, or Maintenance Voucher Book.

The following is a list of recommended lubricants for the Morris Minor (Series MM)

Climatic conditions	Esso	Mobil	Shell	BP	Filtrate	Sternol	Duckham's	Castrol
A ENGINE AND AIR CLEANER								
Tropical and temperate down to 0° C. (32° F.)	Esso Extra Motor Oil 20W/30	Mobiloil A	Shell X—100 30	Energol S.A.E. 30	Filtrate Medium 30	Sternol W.W. 30	Duckham's NOL Thirty	Castrol X.L.
Extreme cold down to −12° C. (10° F.)	Esso Extra Motor Oil 20W/30	Mobiloil Arctic	Shell X—100 20W	Energol S.A.E. 20W	Filtrate Zero 20/20W	Sternol W.W. 20	Duckham's NOL Twenty	Castrolite
Arctic consistently below −12° C. (10° F.)	Esso Motor Oil 10	Mobiloil 10W	Shell Rotella 10W	Energol S.A.E. 10W	Filtrate Sub-Zero 10W	Sternol W.W. 10	Duckham's NOL Ten	Castrol Z
B GEARBOX, STEERING GEARBOX, AND REAR AXLE (HYPOID GEARS)								
All conditions down to −12° C. (10° F.)	Esso Gear Oil G.P. 90	Mobilube G.X. 90	Shell Spirax 90 E.P.	Energol S.A.E. 90 E.P.	Filtrate Hypoid Gear 90	Ambroleum E.P. 90	Duckham's Hypoid 90	Castrol Hypoy
Arctic consistently below −12° C. (10° F.)	Esso Gear Oil G.P. 80	Mobilube G.X. 80	Shell Spirax 80 E.P.	Energol S.A.E. 80 E.P.	Filtrate Hypoid Gear 80	Ambroleum E.P. 80	Duckham's Hypoid 80	Castrol Hypoy Light
C WHEEL HUBS, WATER PUMP BEARINGS AND PROPELLER SHAFT								
All conditions	Esso Multi-purpose Grease H	Mobilgrease M.P.	Shell Retinax A	Energrease L. 2	Filtrate Super Lithium Grease	Ambroline L.H.T.	Duckham's L.B. 10 Grease	Castrolease L.M.
D STEERING CONNECTIONS, SWIVEL PINS, CLEVIS PINS, AND LEVER FULCRUMS								
All conditions	Esso Multi-purpose Grease H	Mobilgrease M.P.	Shell Retinax A	Energrease L. 2	Filtrate Super Lithium Grease	Ambroline L.H.T.	Duckham's L.B. 10 Grease	Castrolease L.M.
E CABLES AND VITAL CONTROL JOINTS								
All conditions	Esso Multi-purpose Grease H	Mobilgrease M.P.	Shell Retinax A	Energrease L. 2	Filtrate Super Lithium Grease	Ambroline L.H.T.	Duckham's L.B. 10 Grease	Castrolease L.M.
F UTILITY LUBRICANT, S.U. CARBURETTER PISTON DAMPER, OILCAN POINTS, ETC.								
All conditions	Esso Extra Motor Oil 20W/30	Mobiloil Arctic	Shell X—100 20W	Energol S.A.E. 20W	Filtrate Zero 20/20W	Sternol W.W. 20	Duckham's NOL Twenty	Castrolite

EXTREME COLD CONDITIONS

Where a car is operated in temperatures which are consistently below −12° C. (10° F.) the use of an oil of lower viscosity than that recommended for normal use is desirable, and under such conditions the use of engine oil of the grades indicated in the appropriate temperature range is recommended.

Similar considerations apply in the case of the gearbox, rear axle, and steering gearbox.

The recommended lubricants are indicated on page P.2. The lubricant reference letters are bracketed in the following pages.

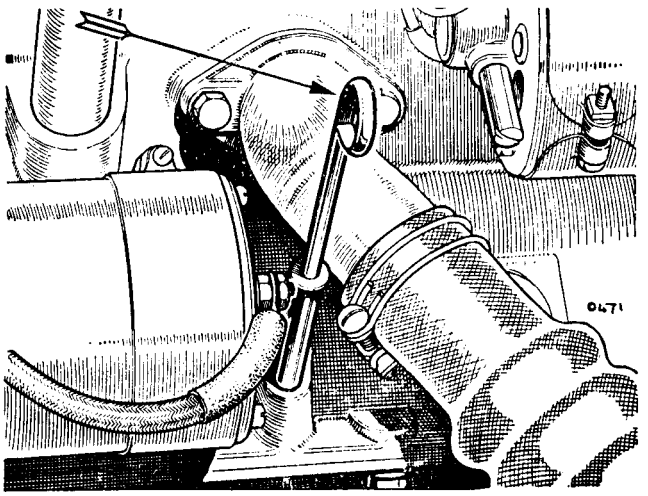

Fig. P.1

The oil level dipstick for the engine is on the right-hand side of the cylinder block

Section P.1

ENGINE LUBRICATION (A)

Change the oil at the specified intervals.

The engine should preferably be drained when warm and the oil is relatively fluid.

The oil level should be checked with the dipstick and replenished if necessary. The level should never be allowed to fall below the 'LOW' mark.

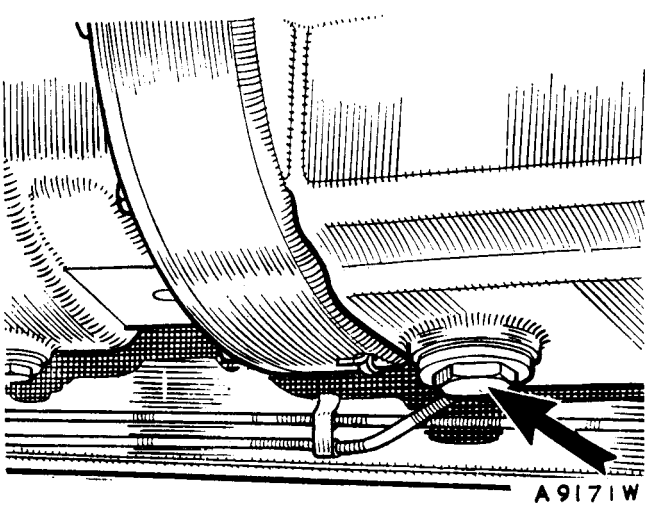

Fig. P.2

The drain plug for the engine sump is located at the rear end of the sump close to the flywheel housing

The sump capacity is given in **'GENERAL DATA'.**

Later models are fitted with an external oil filter of the renewable element type. The element in these should be renewed at the specified intervals. Three makes of filter are fitted, either Fram, A.C., or Purolator. Make sure to use the right replacement element.

It is possible and quite practicable to fit a Purolator or Fram element as a replacement in an A.C. filter body, but it is NOT possible to fit an A.C. element in the Purolator or Fram body.

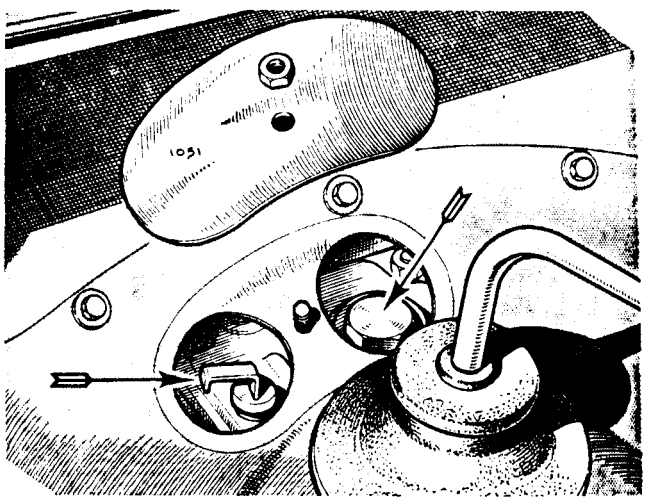

Fig. P.3

The gearbox oil filler and dipstick are accessible through the apertures in the toeboard

Section P.2

GEARBOX LUBRICATION (B)

The gearbox oil level should be checked with the dipstick at the specified intervals, and replenished if necessary.

Access to the dipstick is obtained through the aperture in the left toeboard closed by the kidney-shaped cover-plate and revealed by raising the carpet.

The oil should never be allowed to fall below the 'LOW' mark.

The gearbox should be drained and refilled with fresh oil at the specified intervals.

A drain plug is provided in the base of the box.

The capacity of the gearbox is given in **'GENERAL DATA'.**

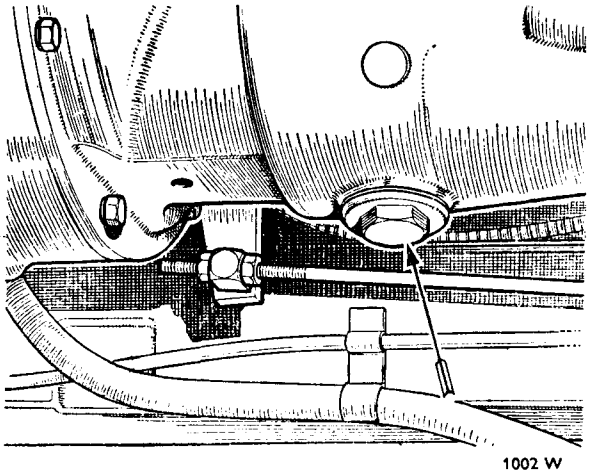

Fig. P.4

The location of the gearbox drain plug

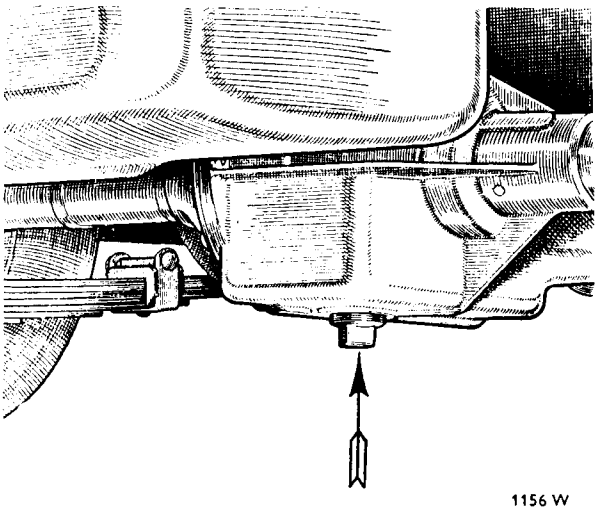

Fig. P.6

The axle casing is provided with a drain plug

Section P.3

REAR AXLE LUBRICATION (B)

It is important that only Hypoid oils of the approved grades be used in the rear axle if damage to the gears is to be avoided.

The rear axle oil level should be checked at the specified intervals, and replenished if necessary.

Access to the filler plug is obtained through the circular aperture in the rear seat pan closed by a dished cover with spring retainer.

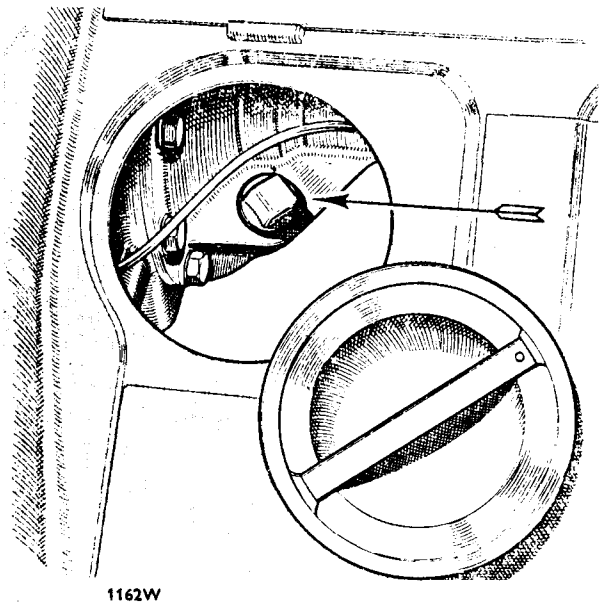

Fig. P.5

The rear axle oil filler can be reached through the opening in the rear seat pan after removing its circular cover-plate

The correct level is when the oil is level with the bottom thread of the filler plug opening.

The rear axle should be drained at the specified intervals.

The capacity of the axle is given in **'GENERAL DATA'.**

Section P.4

GREASE GUN LUBRICATION POINTS (D)

Extensive use of oil-less bearings has reduced the number of points requiring attention with the grease gun to a minimum.

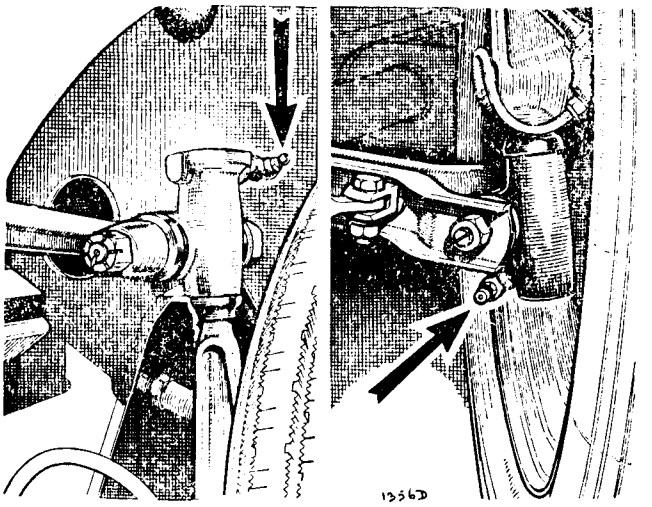

Fig. P.7

The grease nipples at the top and bottom of the steering knuckle

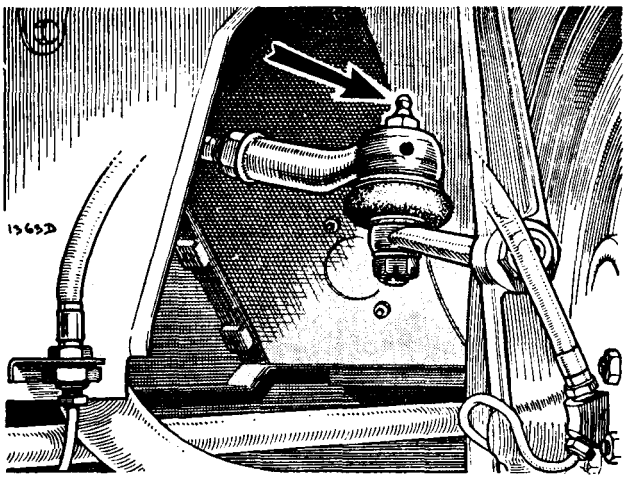

Fig. P.8

Each steering tie-rod has a grease nipple to lubricate its outer ball joint

Grease nipples are located at the following points, which should receive attention at the specified intervals.

(1) Steering knuckles (four nipples), three or four strokes.

(2) Steering tie-rod ball ends (two nipples), three or four strokes.

(3) Propeller shaft universal joints (two nipples), three or four strokes.

(4) Propeller shaft sliding joint (one nipple), three or four strokes.

(5) Fan spindle (one nipple), two strokes (on models fitted with water pump).

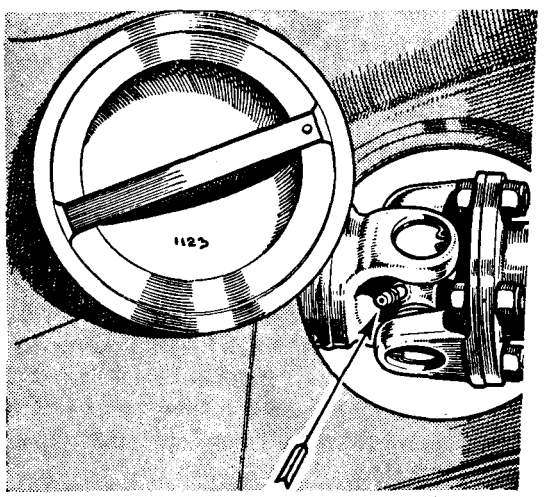

Fig. P.9

The grease nipple for the rear propeller shaft universal joint

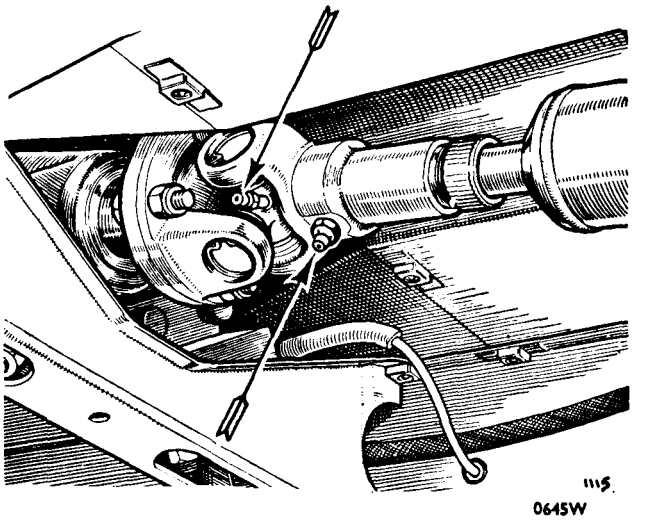

Fig. P.10

The grease nipples for the front propeller shaft universal joint and the propeller shaft sliding joint are here shown

Section P.5

CARBURETTER PISTON DAMPER LUBRICATION (F)

Remove the damper unit and pour oil into the hollow piston rod to a point ½ in. (13 mm.) above the top of the rod.

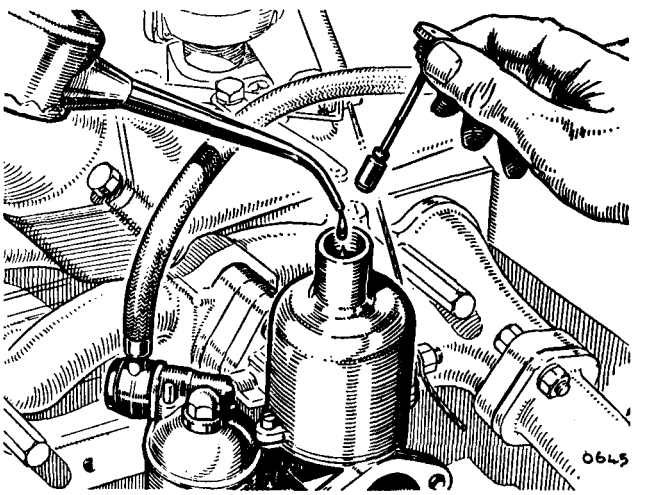

Fig. P.11

Carburetter damper lubrication

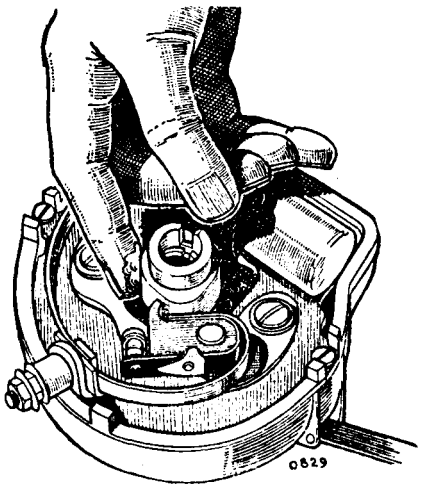

Fig. P.12

The distributor cam should be given a light smear of grease at the specified intervals

Section P.6

DISTRIBUTOR LUBRICATION (D) AND (F)

At the specified intervals the distributor cam and rocker arm pivot should be given a light smear of grease

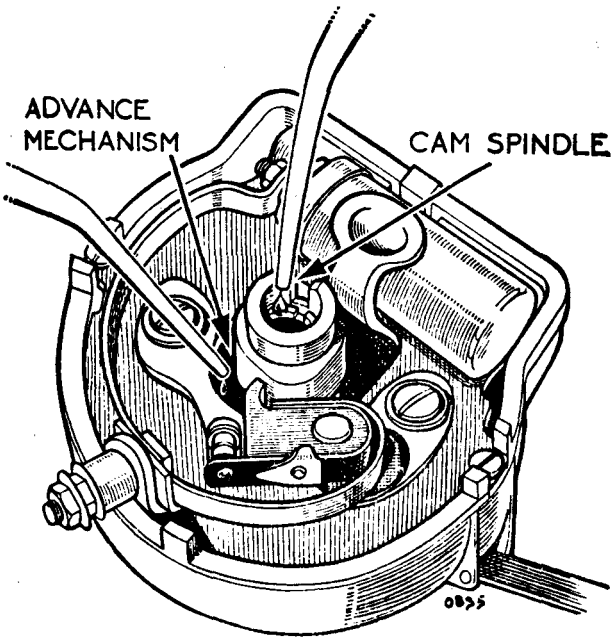

Fig. P.13

The distributor spindle is lubricated through the special duct provided next to the cam securing screw, and the advance control mechanism through the aperture round the cam spindle

A few drops of thin machine oil should be added to the spindle centre at the same time after removing the rotor arm.

Two drops of thin engine oil should be added through the opening round the spindle to lubricate the advance mechanism.

Section P.7

DYNAMO LUBRICATION (C)

At the specified intervals the dynamo lubricator should be unscrewed, the felt pad withdrawn, and the lubricator half-filled with grease.

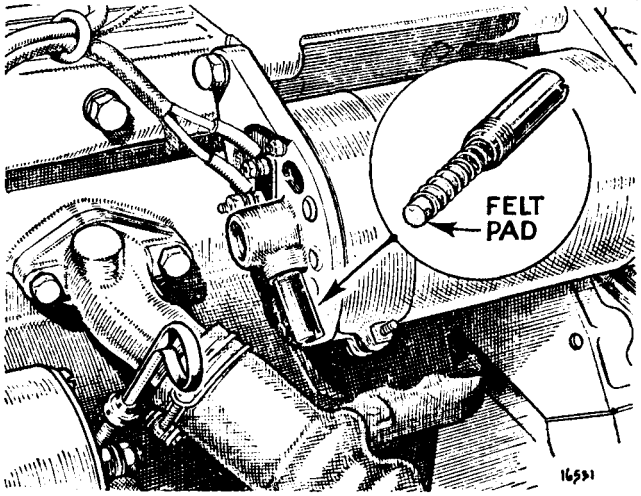

Fig. P.14

The dynamo lubricator

Section P.8

STEERING RACK LUBRICATION (B)

The steering rack is lubricated by an oil gun through a nipple provided at the opposite end to the steering pinion.

The oil from the steering rack also serves to lubricate the inner ball joints for the steering tie-rods, which are protected by rubber gaiters of the bellows type.

Care must be taken not to overlubricate the steering rack, since excess oil introduced is forced into the bellows, which may cause them to burst when the steering is turned to full lock and one of the bellows is fully contracted.

Access to the nipple is achieved by raising the floor carpet from the toeboard on the passenger side. This exposes an aperture in the toeboard, giving access to the nipple.

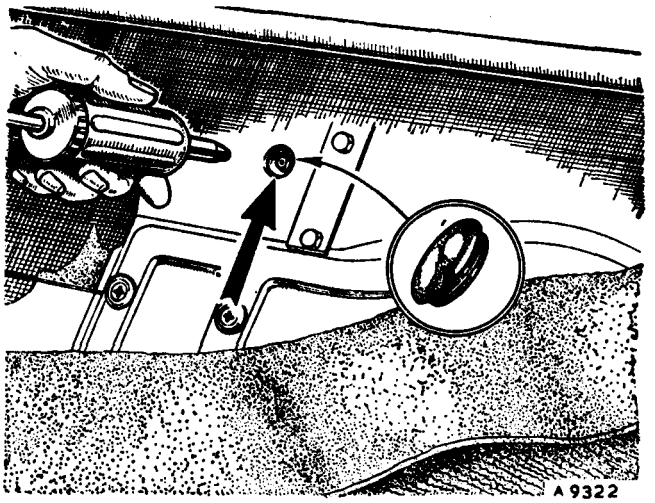

Fig. P.15

The oil gun nipple for the steering rack is accessible through the hole provided in the toeboard

Lubrication at the specified intervals is sufficient, **and not more than 10 strokes of a hand-type lubricating gun should be given.**

Section P.9

TRAFFICATORS

At the specified intervals each trafficator arm should be raised and a trace of thin machine oil, such as sewing-machine or typewriter oil, applied to the catch pin between the arm and the operating mechanism. Use only the merest trace of oil, as any excess will affect the functioning.

Remove the cover from the arm by removing the fixing screw and sliding it off the arm, and apply a drop of thin machine oil to the lubricating pad on the top of the arm.

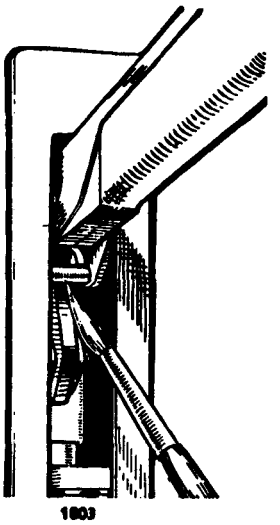

Fig. P.16 (left)

A very small quantity of oil should be applied to the trafficator catch pin occasionally by means of a small brush

Fig. P.17 (below)

The manner in which the trafficator arm cover is removed and replaced is here clearly shown

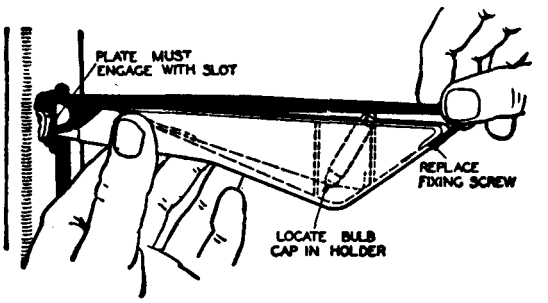

SECTION PP

LUBRICATION

OF THE MORRIS MINOR (Series II)

Lubrication of the items detailed in this Section should be carried out at the intervals specified in the Driver's Hand book, Passport to Service, or Maintenance Voucher Book.

Lubrication items not detailed in this Section are identical on all Morris Minor models and will be found in detail in Section P.

RECOMMENDED LUBRICANTS

(Morris Minor Series II and Minor 1000)

	A and D			B		C	E
Component	Engine, Gearbox, Carburetter, and Oil Bath Air Cleaner (where fitted)			Steering Rack and Rear Axle		Water Pump and Grease Points	Upper Cylinder Lubrication
Climatic conditions	**All temperatures above −12° C. (10° F.)**	**Temperatures −18° to −7° C. (0° to 20° F.)**	**All temperatures below −18° C. (0° F.)**	**All temperatures above −12° C. (10° F.)**	**All temperatures below −7° C. (20° F.)**	**All conditions**	**All conditions**
DUCKHAMS	Duckhams Q. 20–50	Duckhams Q. 5500	Duckhams Q. 5–30	Duckhams Hypoid 90	Duckhams Hypoid 80	Duckhams L.B. 10 Grease	Duckhams Adcoid Liquid
CASTROL	Castrol XL (20W/50) or Castrol GTX	Castrolite or Castrol Super	Castrol CR 5W/20	Castrol Hypoy	Castrol Hypoy Light	Castrolease L.M.	Castrollo
ESSO	Esso Extra Motor Oil 20W/50	Esso Extra Motor Oil 10W/30	Esso Extra Motor Oil 5W/20	Esso Gear Oil G.P. 90/140 or G.P. 90	Esso Gear Oil G.P. 80	Esso Multi-purpose Grease H	Esso Upper Cylinder Lubricant
MOBIL	Mobiloil Special 20W/50	Mobiloil Super 10W/40	Mobiloil 5W/20	Mobilube G.X. 90	Mobilube G.X. 80	Mobilgrease M.P.	Mobil Upperlube
BP	BP Super Visco-Static 20W/50	BP Super Visco-Static 10W/40	BP Super Visco-Static 5W/20	BP Gear Oil S.A.E. 90 E.P.	BP Gear Oil S.A.E. 80 E.P.	BP Energrease L. 2	BP Upper Cylinder Lubricant
SHELL	Shell Super Motor Oil 100 (20W/50)	Shell Super Motor Oil 101 (10W/30)	Shell Winter Special Motor Oil or Shell Super Motor Oil 5W/30	Spirax 90 E.P.	Spirax 80 E.P.	Shell Retinax A	Shell Upper Cylinder Lubricant
FILTRATE	Filtrate 20W/50	Filtrate 10W/30	Filtrate 5W/20	Filtrate E.P. Gear 90	Filtrate E.P. Gear 80	Filtrate Super Lithium Grease	Filtrate Petroyle
STERNOL	Sternol W.W. Multigrade 20W/50	Sternol W.W. Multigrade 10W/40	Sternol W.W. Multigrade 5W/20	Ambroleum E.P. 90	Ambroleum E.P. 80	Ambroline L.H.T.	Sternol Magikoyl

The recommended lubricants are indicated on page PP.2.

The lubricant reference letters are bracketed in the following pages.

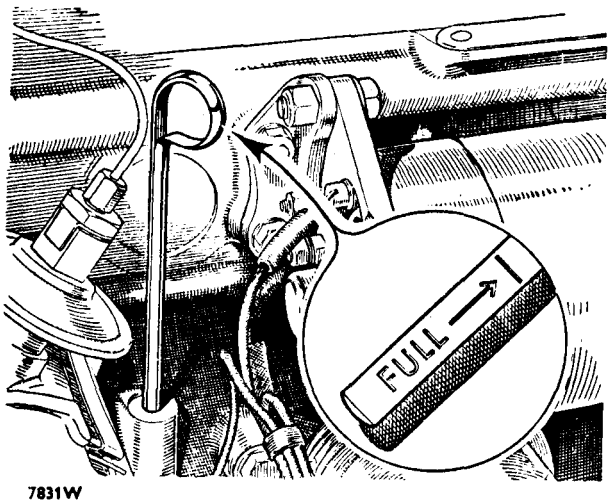

Fig. PP.1

The oil level dipstick for the engine is on the right-hand side of the cylinder block

Section PP.1

ENGINE LUBRICATION (A)

Change the oil at the specified intervals.

The engine should preferably be drained when warm and the oil is relatively fluid.

The oil level should be checked with the dipstick, and replenished if necessary. The level should never be allowed to fall so low that there is no indication of oil on the dipstick.

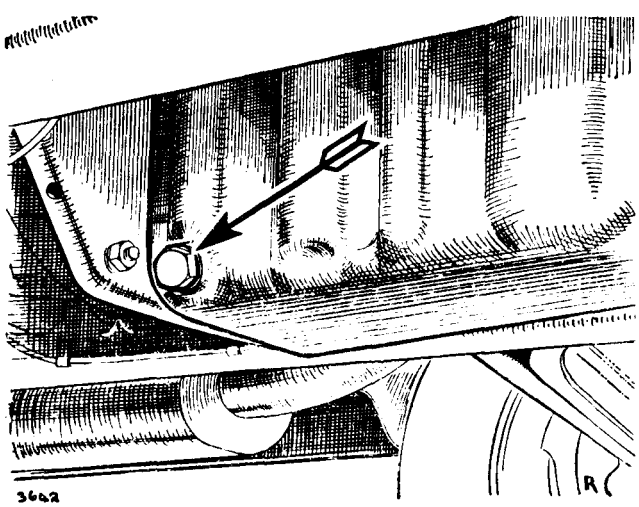

Fig. PP.2

The drain plug for the engine sump is located at the rear end of the sump on the right-hand side

The sump capacity is given in **'GENERAL DATA'.**

The oil filter is of the throw-away type and is mounted at the front end of the cylinder block on the right-hand side. At the specified intervals the filter must be removed and replaced by a new one. To do this slacken the screw in the spring clip and unscrew the filter from the cylinder block by rotating it anti-clockwise. Fit a new filter and gasket, screwing the filter fully home before tightening the spring clip. Either Purolator MF6100, an AC Type SA, or a Tecalemit (Part No. 2A 523) replacement element may be used.

Section PP.2

GEARBOX LUBRICATION (A)

The gearbox oil level should be checked at the specified intervals, and replenished if necessary.

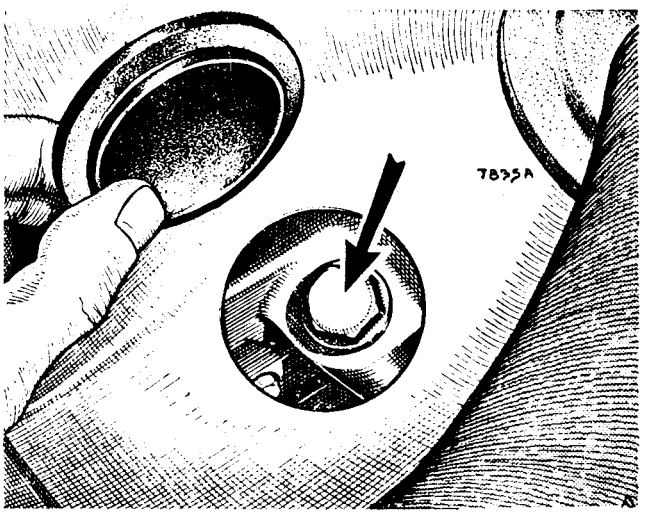

Fig. PP.3

The gearbox oil filler is accessible through the aperture in the toeboard

The filler plug, which also serves to indicate the oil level, is located beneath a rubber cover situated near the gear lever, and is accessible when the front carpet and rubber cover have been raised.

The gearbox must only be filled with engine oil to Ref. A (S.A.E. 30 grade) to the level of the filler plug.

The gearbox should be drained and filled with fresh oil at the specified intervals.

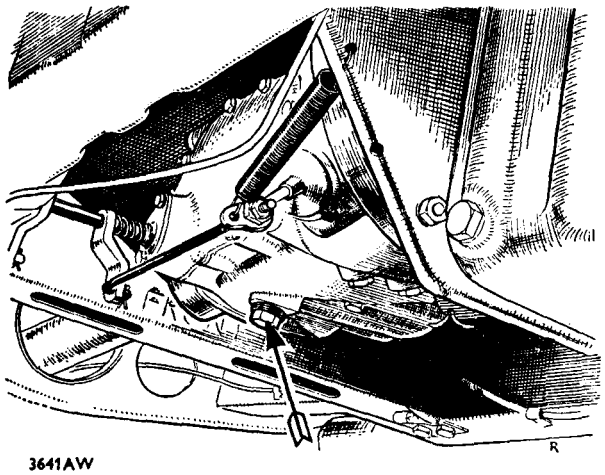

Fig. PP.4

The location of the gearbox drain plug

A drain plug is provided in the base of the gearbox. Ensure that the hollow centre of the drain plug is kept clean.

The capacity of the gearbox is given in **'GENERAL DATA'.**

Section PP.3

REAR AXLE LUBRICATION (B)

It is important that only Hypoid oils of the approved grades be used in the rear axle if damage to the gears is to be avoided.

The rear axle oil level should be checked at the specified intervals, and replenished if necessary.

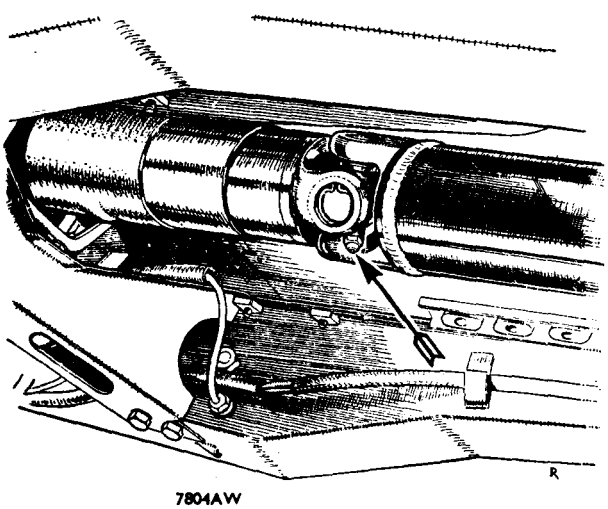

Fig. PP.5

The grease nipple for the front propeller shaft universal joint. Note that there is no nipple on the sliding joint, which is of the reverse-spline type and automatically lubricated from the gearbox

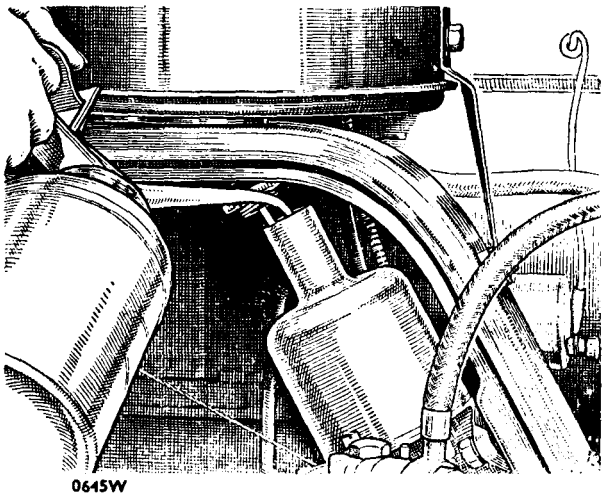

Fig. PP.6

Carburetter damper lubrication

Access to the filler and drain plugs is from underneath the rear of the car.

The rear axle capacity is given in **'GENERAL DATA'.**

Section PP.4

CARBURETTER PISTON DAMPER LUBRICATION (D)

Remove the damper unit and pour oil into the hollow piston rod to a point ½ in. (13 mm.) above the top of the rod.

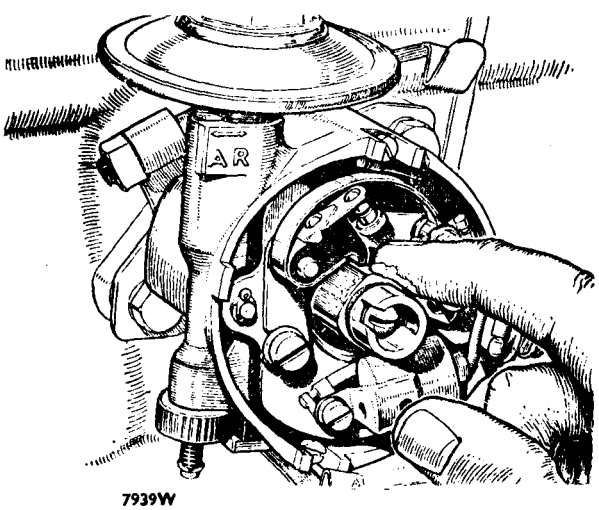

Fig. PP.7

The distributor cam should be given a light smear of grease or engine oil at the specified intervals. At the same time the rocker spindle should also be given a smear of grease or oil

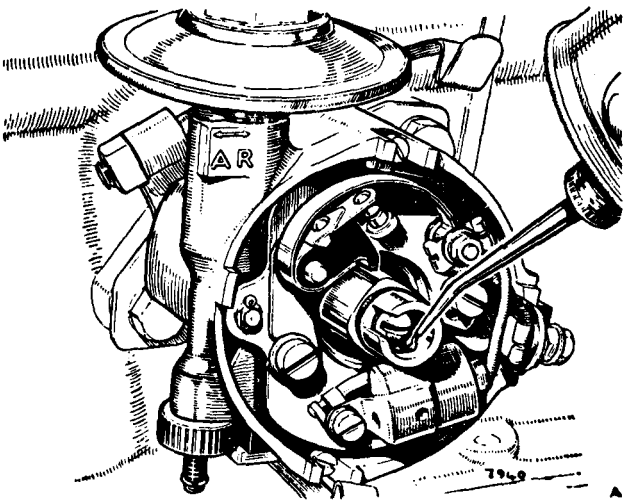

Fig. PP.8

The distributor spindle is lubricated through the special duct provided below the cam securing screw

Section PP.5

DISTRIBUTOR LUBRICATION (C & D)

At the specified intervals the distributor cam and rocker arm pivot should be given a light smear of grease or oil.

A few drops of thin oil should be added to the spindle centre at the same time after removing the rotor arm.

Two drops of thin oil should be added, through the opening round the spindle, to lubricate the advance mechanism.

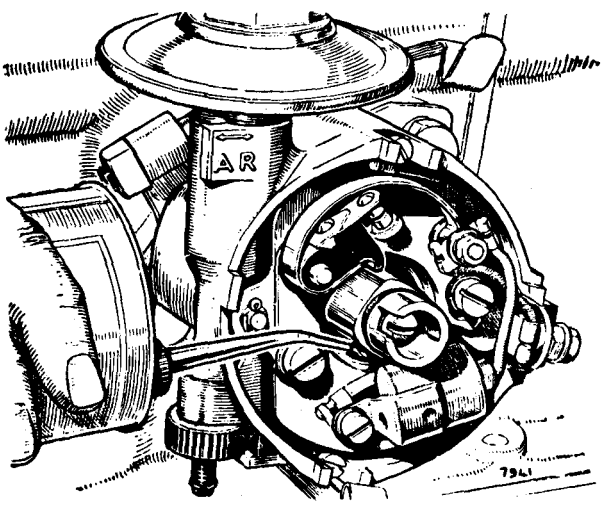

Fig. PP.9

The advance control mechanism is lubricated through the aperture round the cam spindle

Section PP.6

WATER PUMP LUBRICATION (C)

At the specified intervals remove the plug on the water pump casing and add a small quantity of grease. The greasing of the pump must be done very sparingly, otherwise grease will run past the bearings onto the face of the carbon and rubber sealing rings and impair their efficiency.

Section PP.7

GREASE GUN LUBRICATION POINTS (C)

The lubrication points requiring attention are the same as those detailed in Section P.4, with the exception that there is no grease nipple on the propeller shaft sliding joint, which is automatically lubricated from the gearbox, or on the water pump.

In addition to the points detailed in Section P.4 hand brake cables with grease nipples are fitted to all Morris Minor (Series II) cars from Car No. 361959.

At the specified intervals apply the grease gun and give three or four strokes.

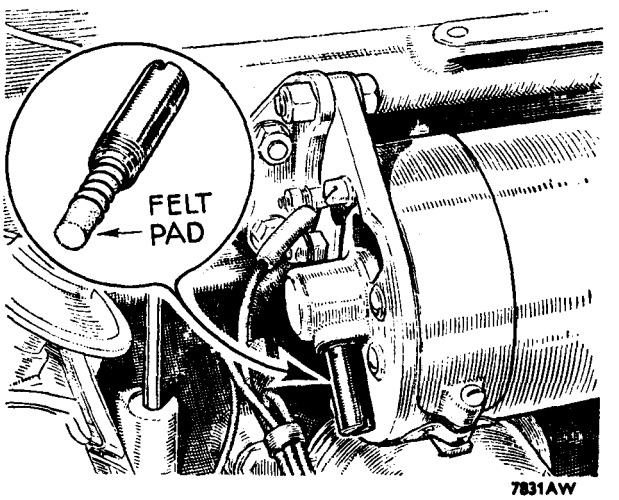

Fig. PP.10

The dynamo lubricator. Later models have an oil hole in place of the wick lubricator

Section PP.8

DYNAMO LUBRICATION (C & D)

At the specified intervals the dynamo lubricator on early models should be unscrewed, the felt pad withdrawn, and the lubricator replenished with grease. Later models have no wick lubricator and should be lubricated with a few drops of oil added to the central hole in the commutator end bearing.

SECTION PPP

LUBRICATION
OF THE MORRIS MINOR 1000

Lubrication of the items detailed in this Section should be carried out at the intervals specified in the Driver's Handbook, Passport to Service, or Maintenance Voucher Book.

Lubrication items not detailed in this Section will be found in detail in Section P or Section PP.

The recommended lubricants are indicated on page PP.2. The lubricant reference letters are bracketed on this page.

Section PPP.1

ENGINE OIL FILTER

The oil filter fitted to the Minor 1000 is of the full-flow renewable-element type and the element should be renewed at the specified intervals. The filter is released by unscrewing the central bolt securing the filter to the filter head. When fitting the new element make sure that the seating washer for the filter body is in good condition and that the body is fitted securely to prevent oil leaks. Care must also be taken to ensure that the washers below the element inside the bowl are fitted correctly. The small felt washer must be positioned between the element pressure plate and the metal washer above the pressure spring. It is essential for correct oil filtration that the felt washer should be in good condition and a snug fit on the centre-securing bolt.

The sump and full-flow oil filter capacity is given in 'GENERAL DATA'.

Section PPP.2

AIR CLEANER LUBRICATION (A)
(Oil Bath Type Only)

The cleaner should be cleaned and filled with new oil at the specified intervals, or more frequently if inspection shows this to be necessary.

Wash the filter element in a bowl of paraffin (kerosene), and allow it to drain and dry **thoroughly.**

Lift out the oil container empty the oil, and scrape out the accumulated sludge. Wash the entire oil container in paraffin (kerosene) and fill to level with engine oil. It is not necessary to re-oil the filter element; it is done automatically as soon as the engine starts up.

Make sure that the cork gasket is in good condition and reassemble the cleaner.

Section PPP.3

FLUSHING THE ENGINE

Flush the engine with a flushing oil supplied by one of the recommended manufacturers (page PP.2) at the specified intervals. This operation must be carried out prior to oil filter changing. Use approximately half the normal sump capacity and run the engine for 2½ to 3 minutes at a fast tick-over, after which special care must be taken to ensure complete drainage of the flushing oil.

Section PPP.4

DYNAMO LUBRICATION (D)

Where the later-type C40–1 dynamo is fitted inject a few drops of engine oil into the hole marked 'OIL' at the end of the rear bearing housing at the specified intervals.

Section PPP.5

ENGINE OIL LEVEL DIPSTICK

The 'FULL' marking on the engine oil level dipstick has been changed to 'MAX' and 'MIN' markings on later cars.

Section PPP.6

ENGINE OIL FILTER WARNING LIGHT
(When Fitted)

The engine oil filter warning light, which is incorporated in the instrument dial, is a guide to the need for more frequent oil and filter element changes. If the light comes on and continues to glow when the engine is running at or above fast idling speed, it indicates the need for a new oil filter element and an oil change; this should be done as soon as possible within a maximum of a further 300 miles (500 km.).

SECTION Q

SERVICE TOOLS

Every Distributor servicing Morris cars is recommended to maintain the Service tools detailed in this list, as by their use damage to parts will be obviated and repairs generally will be greatly facilitated. For additional information refer to the Service Tool Catalogue (Part No. AKD 770). When ordering Service tools always quote new part numbers.

Description	*Old Part No.*	*New Part No.*
Extractors		
Valve spring compressor with foot (Series MM)	38378	**18G 270**
Detachable foot for above (Series MM)	68821	**18G 271**
Valve spring compressor with foot (Series II and Minor 1000)	68820	**18G 45**
Front and rear hub remover (basic tool)	AJA 5019	**18G 304 E**
Bolts for above ($\frac{7}{16}$ in. B.S.F.)	AJA 5025	**18G 304 C**
Bolts for above ($\frac{7}{16}$ in. UNF.)	AJA 5022	**18G 304 F**
Bolts (for use with $\frac{3}{8}$ in. UNF. wheel studs) (Series II and Minor 1000)	AJA 5033	**18G 304 H**
Axle end plug (for use with 18G 304 F) (Series II and Minor 1000)	AJA 5034	**18G 304**
Axle shaft (B.S.F.) (semi-floating axle only)	68823	**18G 374 A**
Axle shaft (UNF.) (semi-floating axle only)	301203	**18G 284**
Crankshaft pulley remover adaptor (Series MM)	68824	**18G 374**
First motion shaft remover (Series MM)	68825	**18G 318**
Steering-wheel remover	68827	**18G 310**
Bevel pinion bearing inner race (remover and replacer)	301224	**18G 285**
Rear axle bevel pinion outer race (fitting and withdrawing) (semi-floating axle)	301587	**18G 264**
Rear axle pinion outer race fibre box	—	**18G 264 K**
Adaptor for use with 18G 264 (three-quarter-floating axle)	AJE 5003	**18G 264 E**
Rear axle bevel pinion outer race (remover adaptor) (three-quarter-floating axle)	AJE 5005	**18G 264 D**
Front hub inner bearing and crankshaft gear	68895	**18G 309**
Attachment for use with 18G 309 (up to Car No. 228267)	68985	**18G 309 A**
Camshaft liner remover and replacer (basic tool)	AJA 5060	**18G 124 A**
Adaptors for use with 18G 124 A (Series II and Minor 1000)	18G 147	**18G 124 K**
Differential cage bearing remover (basic tool) (Series II)	AJA 5061	**18G 47 C**
Adaptors for use with 18G 47 C (Series II and Minor 1000)	18G 172	**18G 47 M**
Gearbox rear oil seal remover (basic tool) (Series II and Minor 1000)	—	**18G 389**
Gearbox rear oil seal remover adaptor (Series II and Minor 1000)	—	**18G 389 A**
Bearing and oil seal remover and replacer (basic tool) (Series II and Minor 1000)	—	**18G 134**
Timing case oil seal replacer adaptor	—	**18G 134 BD**
Gearbox rear oil seal replacer adaptor (Series II and Minor 1000)	—	**18G 134 L**
Rear hub replacer and adaptor (Series II and Minor 1000)	—	**18G 134 Q**
Camshaft liner remover and replacer (basic tool) (Series II and Minor 1000)	—	**18G 124 A**
Camshaft liner remover adaptor (Series II and Minor 1000)	—	**18G 124 K**
Assembly tools		
Clutch plate centralizer (Series MM)	39371	**18G 275**
Clutch plate aligning tool (Series II and Minor 1000)	GT 139	**18G 139**
Assembly clutch gauging fixture	AJA 5010	**18G 99 A**

Description	Old Part No.	New Part No.
Bevel pinion checking fixture (with mandrel) (semi-floating axle only)	39879	18G 280
Bevel pinion bearing preload gauge (see page Q.7)	—	18G 207
Crankshaft gear, pulley and propeller shaft flange replacer (Series II and Minor 1000)	GT 138	18G 138
Synchromesh assembly ring (Series II and Minor 1000)	GT 144	18G 144
Valve rocker bush remover and replacer ('A'- and 'B'-type engines)	—	18G 226
Valve rocker bush drift (Series II and Minor 1000)	—	18G 226 A
Water pump bearing (Series II)	GT 60	18G 60
Drift for first motion shaft (Series II and Minor 1000)	GT 140	18G 140
Bevel pinion and differential bearing setting gauge (three-quarter-floating axle)	AJA 4004	18G 191 and 18G 191 A
Piston ring clamp (all models)	—	18G 55 A
Dummy layshaft (Series II and Minor 1000)	—	18G 471
Engine (later type) front cover centralizer	—	18G 1044
Spanners		
Lockheed bleeder screw wrench	46746	18G 353
Cylinder head nut (Series MM)	68830	18G 330
First motion shaft nut (Series MM)	39880	18G 317
Tappet spanner (Series MM)	68945	18G 334
Tappet head wrench with sockets 18G 307 B and 18G 307 A (Series MM)	68834	18G 307
Socket for tappet head wrench (Series MM)	39881	18G 307 B
Steering tie-rod pin spanner	68965	18G 312
Steering tie-rod 'C' spanner	300813	18G 313
Starter nut spanner (Series II and Minor 1000)	GT 98	18G 98
Bevel pinion flange wrench	AJA 5062	18G 34 A
Rear hub nut spanner (Series II and Minor 1000)	—	18G 152
Torque wrench—30 to 140 lb. ft.	—	18G 372
Reamer		
Oil pump bush (Series MM)	68828	18G 329
Camshaft liner reamer (basic tool) (Series II and Minor 1000) ..	AJE 5001	18G 123 A
Camshaft liner reamer cutter (Series II and Minor 1000)	18G 151	18G 123 W
Camshaft liner reamer pilot (Series II and Minor 1000)	18G 123 X	18G 123 AH
Camshaft liner reamer pilot (Series II and Minor 1000)	18G 123 Y	18G 123 AJ
Camshaft liner reamer component fibre box	18G 123	18G 123 AL
Miscellaneous		
Valve grinder (suction) (Series MM, Series II, and Minor 1000) ..	—	18G 29
Valve grinder suction pad	—	18G 29 B
Valve seat finishing cutter (Series MM)	—	18G 375
Valve seat narrowing cutter (top) (Series MM)	—	18G 25 B
Valve seat narrowing cutter (bottom) (Series MM)	—	18G 25 C
Valve seat cutter pilot (Series MM)	—	18G 375 A
Valve seat cutter and pilot handle (Series MM, Series II, and Minor 1000)	—	18G 27 A
Fibre box—valve seat cutters	—	18G 27 E
Valve seat glaze breaker (Series II and Minor 1000)	—	18G 167 A
Valve seat narrowing cutter (top) (Series II and Minor 1000) ..	—	18G 167 B
Valve seat narrowing cutter (bottom) (Series II and Minor 1000) ..	—	18G 167 C
Valve seat cutter pilot (Series II and Minor 1000)	GT 678	18G 167 D

Description	*Old Part No.*	*New Part No.*
Valve seat finishing cutter (Series II and Minor 1000)	GT 167	**18G 167**
Swivel pin die nuts (·015 in. undersize)	AJA 4003	**18G 305 A**
Swivel pin die nut holder (basic tool)	AJA 5051	**18G 305**
Mono body jack (universal) and metal case	—	**18G 308 B**
Oil pump relief valve grinding tool	—	**18G 69**

NOTES ON THE USE OF SERVICE TOOLS

18G 374. Axle Shaft Extractor (B.S.F.)

The use of this impulse-type extractor is essential when withdrawing one of the rear axle shafts from the semi-floating axles. It is attached to the threaded end of the axle shaft and withdraws the shaft complete with its bearing and oil seal.

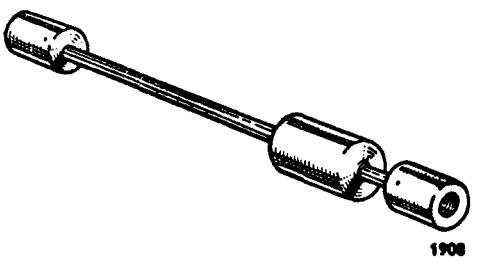

18G 374

18G 29. Suction Valve Grinder

As the valves on the Morris Minor are not provided with a screwdriver grinding slot, it is necessary to use a rubber suction tool when grinding in the valves. An additional suction pad 18G 29 B is available for use on Minor engines (Series MM, Series II, and Minor 1000).

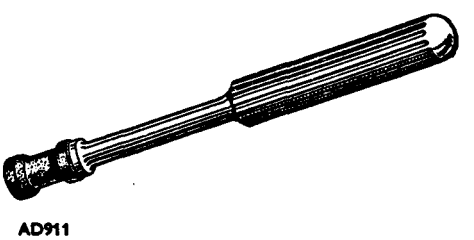

18G 29

18G 310. Steering-wheel Remover

This extractor has been specially designed to remove most Morris, Wolseley, or M.G. steering-wheels without damage. Dealers who already possess tool No. 55418 and the attachment (Part No. 56052) will find that this may also be used to withdraw the steering-wheel.

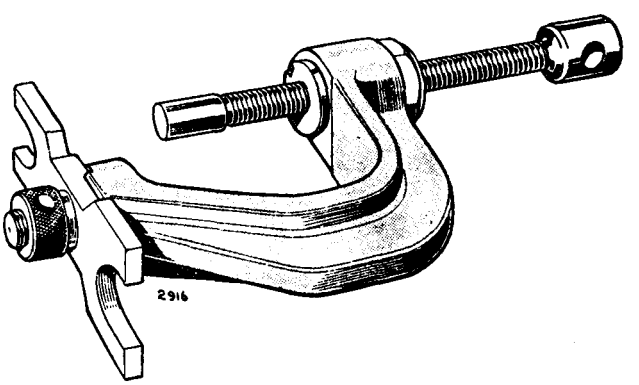

18G 310

18G 275. Clutch Plate Centralizer

When reassembling the single-plate clutch of the Series MM cars it is essential to use this tool to ensure that the clutch plate is concentric with the spigot bearing in the flywheel centre, otherwise it is impossible to assemble the gearbox to the engine.

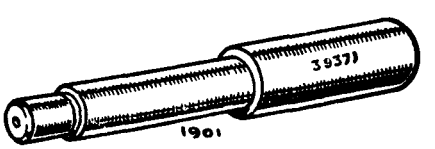

18G 275

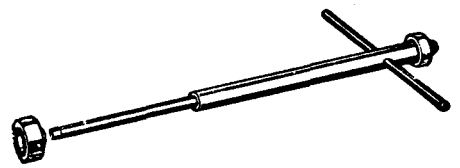

18G 307

18G 307. Tappet Head Wrench

This tool becomes exceedingly useful when the occasion arises to change the tappet adjusting screws on the Morris Minor (Series MM) or Morris Oxford (Series MO) models. It will be noted that the socket (tool No. 18G 307 B) is detachable from the stem. The socket (tool No. 18G 307 A) for use on the Oxford (Series MO) models is secured to the top of the tool to prevent loss. In use the socket is placed on the tappet screw first and the 'T'-handled stem connected to it through the valve guide. It is claimed that a set of tappet screws can be replaced in less than 10 minutes by the aid of this tool.

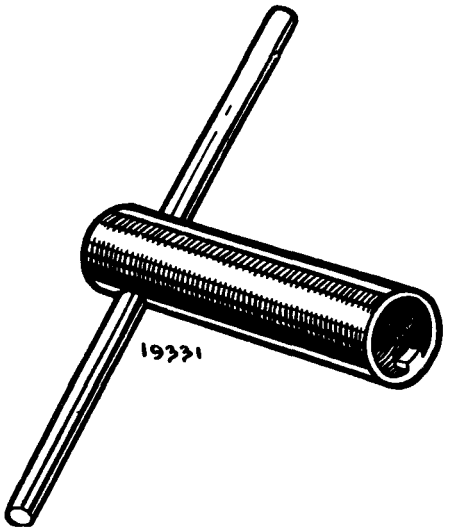

18G 317

18G 317. First Motion Shaft Nut Spanner (Series MM)

Removal of the drive gear bearing locknut without damage can only be accomplished by using this spanner. A hammer and punch should never be used for this purpose.

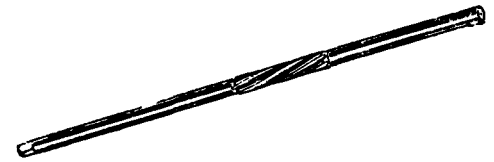

18G 329

18G 329. Oil Pump Bush Reamer

This reamer has been specially designed by Service Department to ream in line the oil pump bushes of the Morris Minor (Series MM) and the Morris Oxford (Series MO).

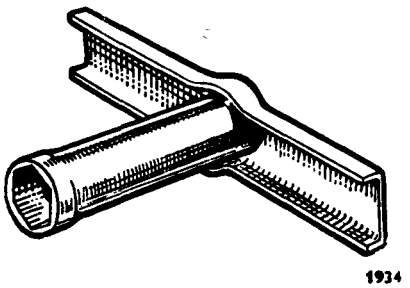

18G 353

18G 353. Lockheed Bleeder Screw Wrench

This specially designed tube spanner and integral tommy-bar greatly assists the brake bleeding operation. The spanner remains square on the bleeder screw without disturbing the bleed tube.

18G 280. Bevel Pinion Checking Fixture

Adjustment of the pinion position is not possible without the aid of this special tool. Instructions for its use are detailed in Section H of this Manual.

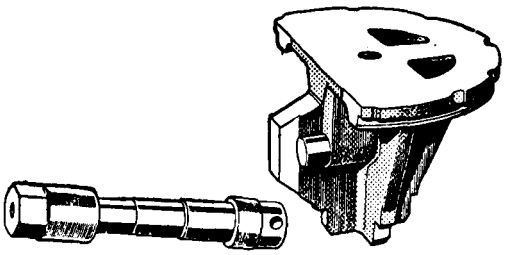

12919

18G 280

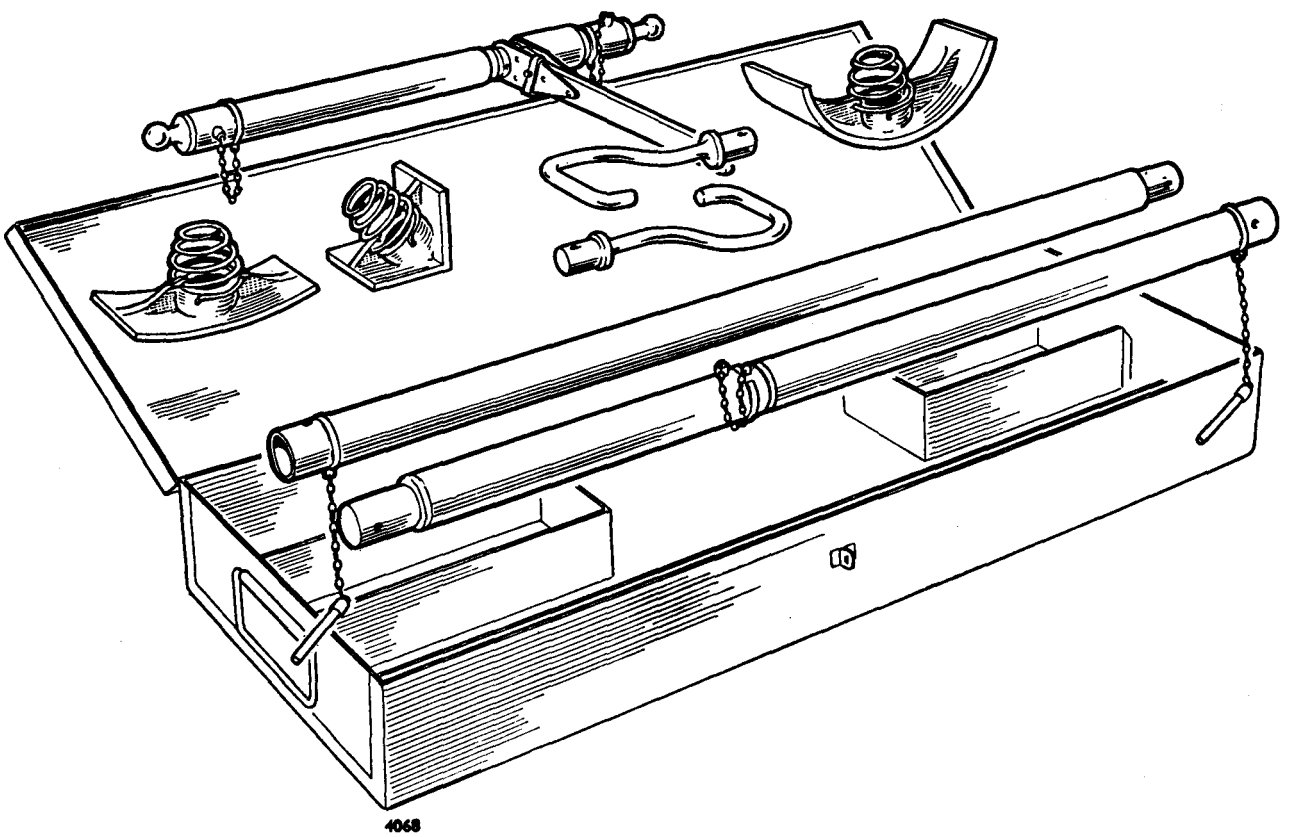

4068

18G 308 B

18G 308 B. Morris Mono Body Jack and Metal Case

The jack is a tool which has been designed to deal with repairs to bodies of all-steel construction. It is supplied in a metal case complete with the various attachments and will be found capable of dealing with all normal requirements.

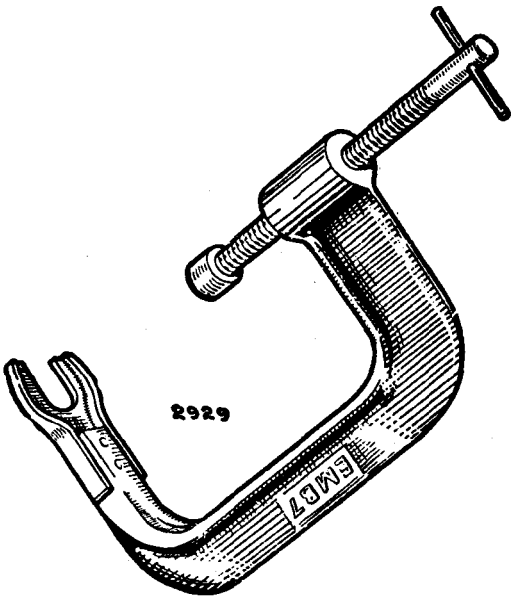

18G 270

18G 270. Valve Spring Compressor

This tool has been specially designed to suit all the Eight models and the Morris Minor (Series MM). It will be noticed that it is sufficiently robust to prevent fracture in normal usage, and the foot is detachable, making it possible to fit a replacement if the original is damaged.

18G 271 A

18G 271 A. Valve Spring Compressor Foot

A detachable foot for use with 18G 270.

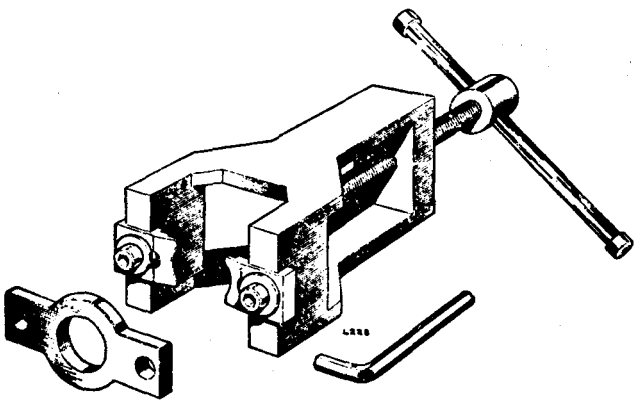

18G 285

18G 285. Bevel Pinion Bearing Inner Race Remover and Replacer

This tool is necessary for withdrawing the inner bearing race from the pinion shaft. It can also be used for replacing the race on the shaft without damage.

This is a universal tool for use with all hypoid-type axles.

18G 207. Bevel Pinion Bearing Preload Gauge

The movable arms of the tool are located in opposite holes of the bevel pinion flange and the weight moved along the rod to the poundage required.

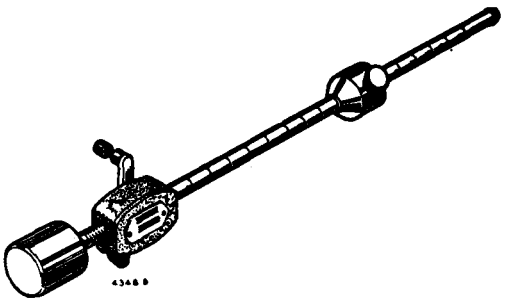

18G 207

18G 191 and 18G 191 A. Bevel Pinion and Differential Bearing Setting Gauge

Correct assembly and adjustment of the rear axle pinion and differential gear on the Morris Minor (Series II and 1000) is impossible without this special tool. Its full use is detailed and illustrated in Section HH.

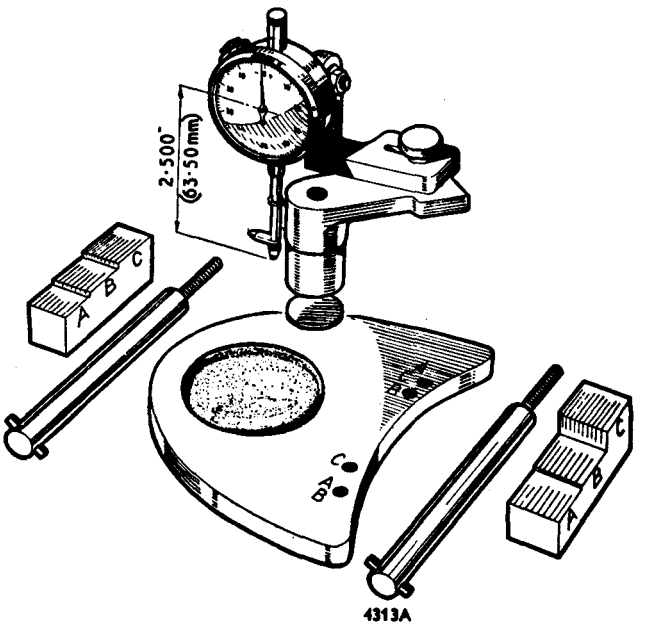

18G 191 and 18G 191 A

18G 304. Front and Rear Hub Remover (basic tool)

This assembly supersedes tool No. 68822 and is universal. The bolts for use with it are obtainable only under their own part numbers. The bolts for use on the Morris Minor are (B.S.F.) 18G 304 E or (UNF.) 18G 304 C. Only two bolts are required for hub withdrawal.

For use on later hubs incorporating ⅜ in. UNF. wheel fixing studs use bolts 18G 304 F and axle end plug 18G 304 H.

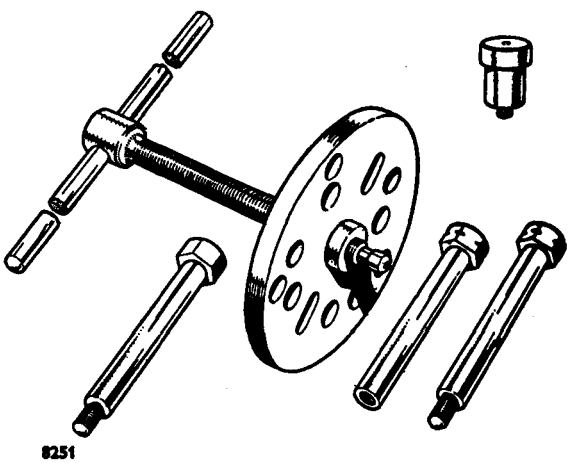

18G 304, 18G 304 E (B.S.F.), 18G 304 C (UNF.), 18G 304 F (⅜ in. UNF.), 18G 304 H (plug)

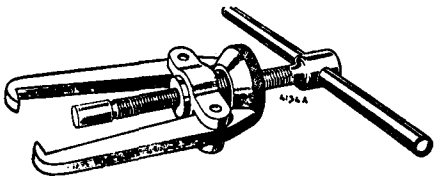

18G 309
Use with attachment 18G 309 A

18G 309. Front Hub Inner Bearing and Crankshaft Gear Extractor (up to Car No. 228267)

Should the inner bearing remain on the stub axle after removing the front hub and brake-drum assembly, this extractor and attachment must be used to remove the bearing without damage to the oil seal behind it. This tool may also be used to withdraw the crankshaft drive gear from Wolseley models and from the Morris Six.

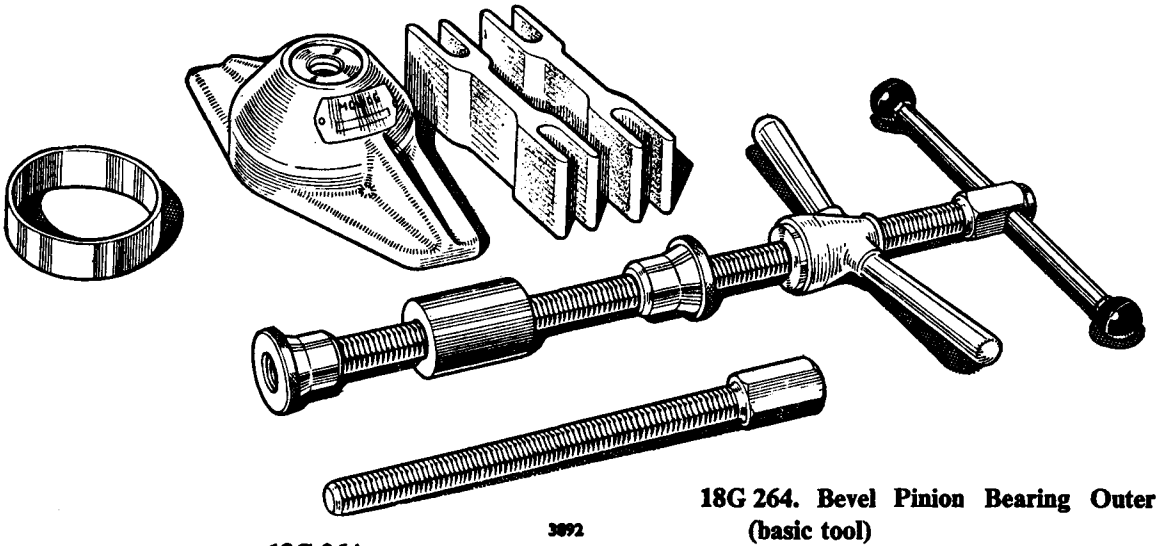

18G 264

18G 264. Bevel Pinion Bearing Outer Race Remover (basic tool)

Comprising a body, centre screw with extension and tommy-bar, wing nut, guide cone, and two distance pieces. A plain ring is also included to serve as a pilot when the rear bearing outer races are being replaced. Use with adaptor 18G 264 D.

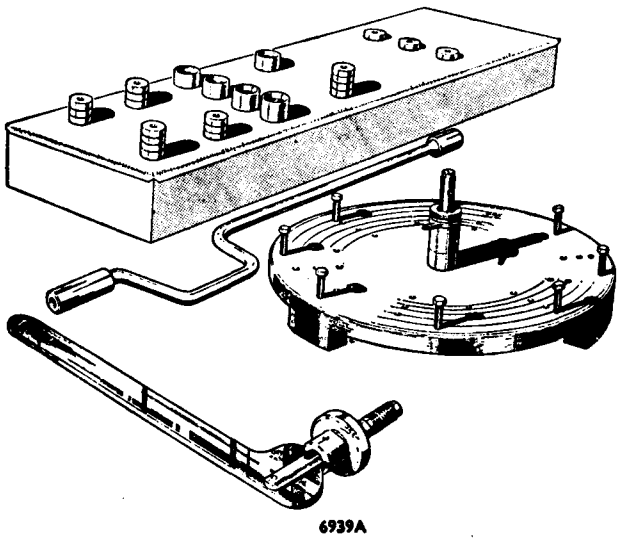

18G 99 A

18G 99 A. Clutch assembly Gauging Fixture

This tool may be used to adjust the release levers of all clutches from 6¼ in. dia. to 11 in. dia. (15·9 to 28 cm.) before the clutch unit is fitted to the flywheel.

18G 98. Starter Nut Spanner

This shock-type spanner enables the starter nut on Series II and Minor 1000 models to be removed without the need for locking the crankshaft with improvised means, which may cause damage to the components. The tool may also be used on the M.G. Magnette.

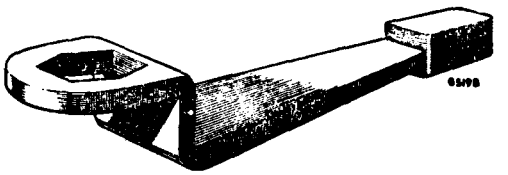

18G 98

18G 226. Valve Rocker Bush Remover and Replacer

This tool prevents damage to the valve rocker bush when it is being fitted or removed. When servicing Morris Minor engines (Series II and 1000) it is necessary to use a separate bush drift (Service Tool 18G 226 A).

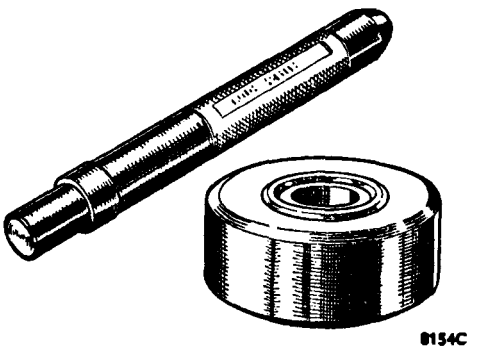

18G 226

18G 138. Crankshaft Gear, Pulley, and Propeller Shaft Flange Replacer

This tool is used for driving on the crankshaft gear and for lining up the timing cover on the Morris Minor (Series II and 1000).

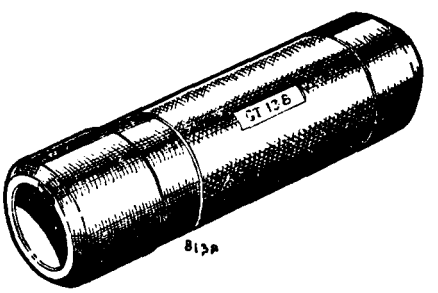

18G 138

18G 139. Clutch Centralizer

The driven plate in the Morris Minor (Series II and 1000) clutch may readily be centralized with the aid of this tool.

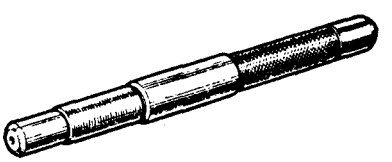

18G 139

18G 144. Synchromesh Assembly Ring

This tool retains the balls and springs in the synchronizer while it is being pushed into the sleeve or first speed wheel on the Morris Minor (Series II and 1000).

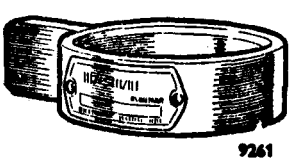

18G 144

18G 471. Dummy Layshaft

The fitting of a layshaft to the lay gear on the Morris Minor (Series II) is simplified by the use of this tool.

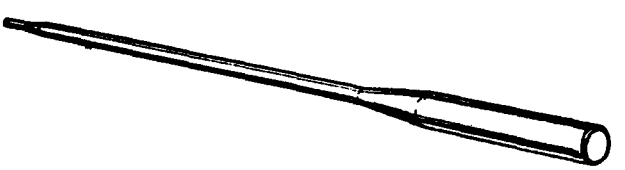

18G 471

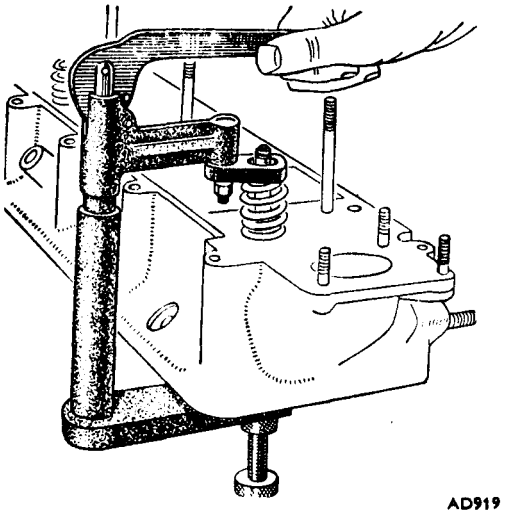

18G 45

18G 45. Valve Spring Compressor

This tool is designed for o.h.v. engines. It has a cam and lever action and screw adjustment. The adaptor ring shaped to facilitate the fitting of cotters.

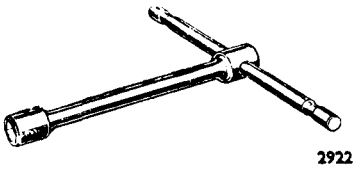

18G 330

18G 330. Cylinder Head Nut Spanner

A strong socket spanner with a tommy-bar designed to give the recommended maximum torque to the cylinder head stud nuts with normal hand pressure (Series MM).

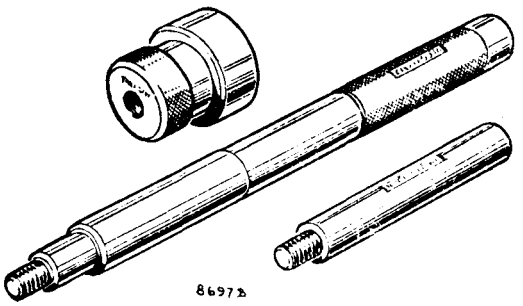

18G 60

18G 60. Water Pump Bearing Remover and Replacer

To safeguard against broken pump bodies this tool should be used when removing and replacing bearings. Comprising a drift and two pilots, it aligns each bearing with its housing before the bearing is pressed into position (Series II).

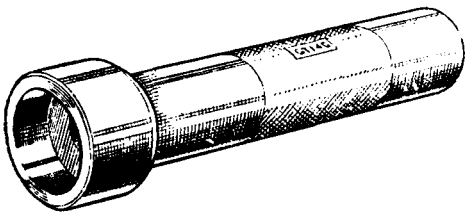

18G 140

18G 140. First Motion Shaft Assembly Replacer

When threaded over the first motion shaft this tool registers with the outer race of the bearing, which then can be driven home without damage (Series II and Minor 1000).

18G 334

18G 334. Tappet Spanner

This is a thin spanner specially designed for easy adjustment of the tappets (Series MM).

18G 312. Steering Tie-rod Spanner

This tool is necessary when removing the bolts which secure the rear spring front shackle and may be used on other Morris and Wolseley models.

The opposite end of the tool is essential when dismantling the rack and pinion steering gear fitted to the Minor and many other models.

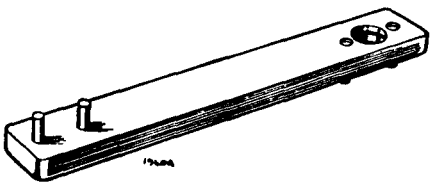

18G 312

18G 313. Steering Tie-rod 'C' Spanner

A tool with jaws designed to engage the shallow splines of the steering rack ball housing cup and remove it without damage.

This spanner may also be used on the ball housing of the rack and pinion steering gear on many other models.

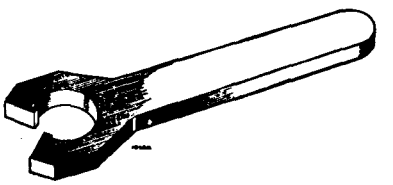

18G 313

18G 34 A. Bevel Pinion Flange Wrench

The two sets of tapered pins on this tool ensure that it will hold the propeller shaft flange against rotation while the flange nut is released or tightened on semi-floating or three-quarter-floating axles.

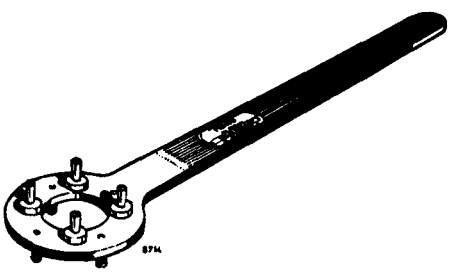

18G 34 A

18G 152. Rear Hub Nut Spanner

A reinforced tubular spanner complete with tommy-bar, designed to pilot in the axle tube with the axle shaft withdrawn.

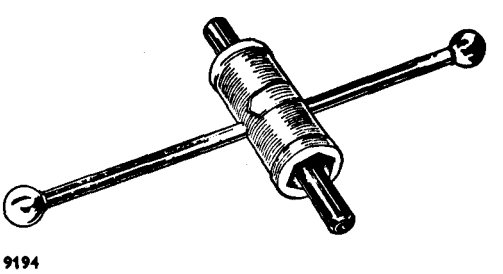

18G 152

18G 305 A. Swivel Pin Die Nuts (·015 in. undersize)

18G 305. Swivel Pin Die Nut Holder (basic tool)

Detailed instructions for the use of this tool are given in Section K.16, together with the part numbers of the undersize swivel pin links which will be necessary.

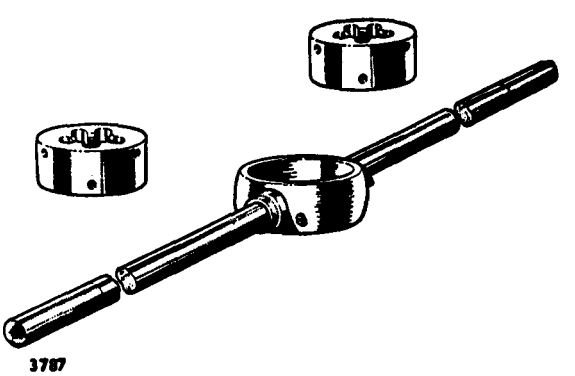

18G 305 A

18G 305

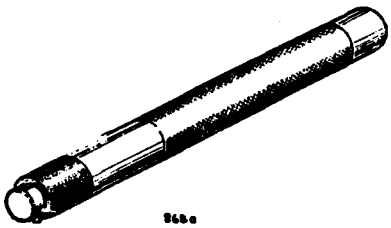

18G 69

18G 69. Oil Pump Relief Valve Grinding Tool

The small knurled knob at the end of this tool is turned to compress the rubber sleeve and increase its diameter until, when pressed into the valve, the rubber will hold the valve securely while it is lapped to its seat.

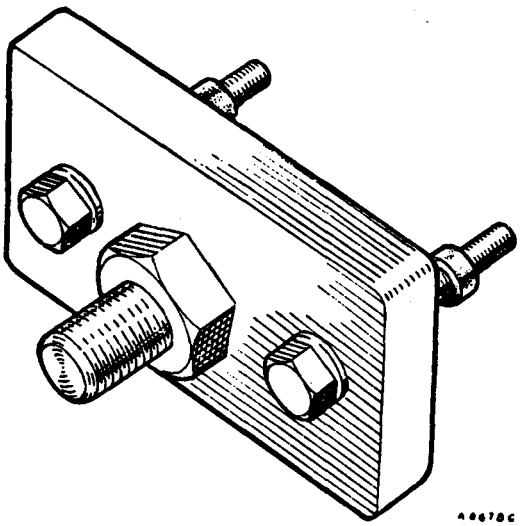

18G 374 A

18G 374 A. Crankshaft Pulley Remover Adaptor

Specially designed to fit the axle shaft extractor, this tool may be used to withdraw the crankshaft pulley from Series MM cars without damage to the pulley flange.

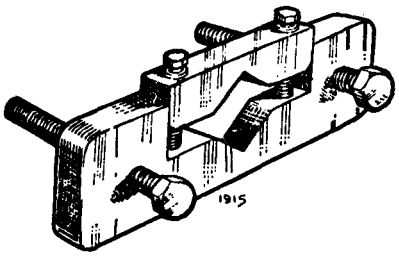

18G 318

18G 318. First Motion Shaft Remover

The use of this extractor is essential if the drive gear is to be withdrawn from the gearbox of a Series MM car without damage to the bearing guard. The extractor is clamped to the drive gear shaft and withdraws the drive gear and bearing.

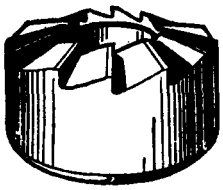

18G 25 B, 18G 167 B

18G 25 B and 18G 167 B. Valve Seat Narrowing Cutter—Top

Designed to enable seats of the Series MM and II and Minor 1000 to be maintained at their original dimensions. Use with pilot 18G 375 A and handle 18G 27. These cutters must not be used on hardened valve seat inserts—the inserts must be renewed.

18G 25 C and 18G 167 C. Valve Seat Narrowing Cutter—Bottom

Use with pilot 18G 375 D and handle 18G 27 for the Series MM and II and Minor 1000.

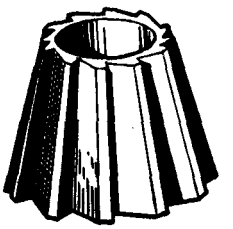

9021A

18G 25 C, 18G 167 C

18G 375 and 18G 167. Valve Seat Finishing Cutter

Use with pilot 18G 375 D and handle 18G 27 for the Series MM and II and Minor 1000.

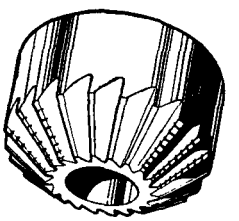

8988

18G 375, 18G 167

18G 375 D. Valve Seat Cutter Pilot

Use with cutters 18G 25 B, 18G 25 C, and 18G 375 and handle 18G 27 for the Series MM.

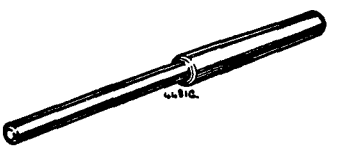

18G 375 D

18G 27. Valve Seat Cutter and Pilot Handle

A standard type of handle for use with a wide range of cutters.

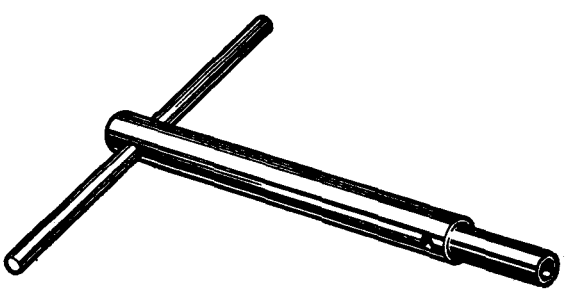

4361D

18G 27

18G 27 B. Fibre Box—Valve Seat Cutters

A fibre box for the storage of valve seat cutting tools. Partitioned to protect the machined edge of the cutters.

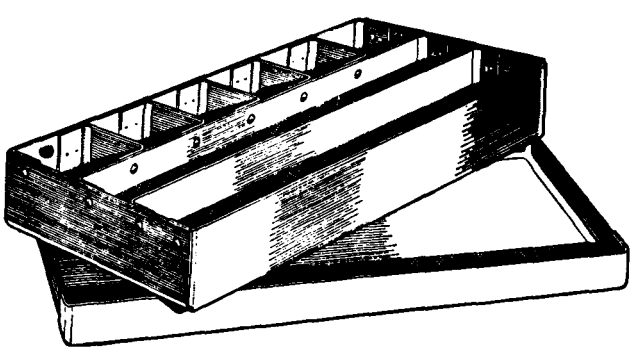

9036

18G 27 B

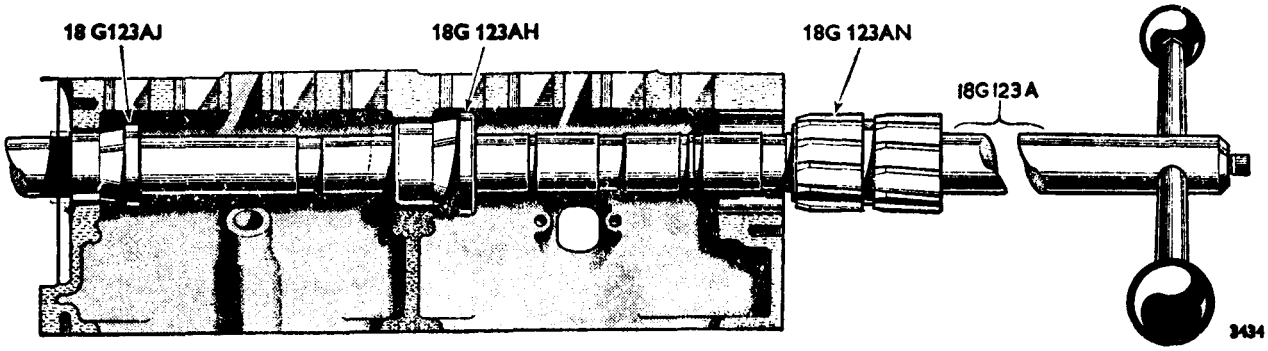

18G 123 A, 18G 123 AN, 18G 123 AH, and 18G 123 AJ

18G 123 A, 18G 123 AN, 18G 123 AH, and 18G 123 AJ. Camshaft Liner Reamer

This equipment is essential when reconditioning cylinder blocks on the Series II and Minor 1000, otherwise camshaft liners cannot be reamed in line, and in consequence the clearance between the camshaft journal and liner will be incorrect. This basic tool 18G 123 A must be used with the cutter 18G 123 AN and pilots 18G 123 AH and 18G 123 AJ. Full instructions for using the equipment will be supplied with each basic tool.

18G 134

18G 134. Bearing and Oil Seal Remover and Replacer (basic tool)

For use with adaptors 18G 134 BD, 18G 134 L, and 18G 134 Q.

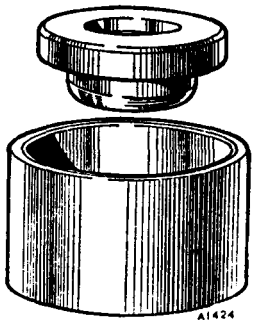

18G 134 BD

18G 134 BD. Timing Case Oil Seal Replacer Adaptor

These tools enable the oil seal to be pressed into the engine front cover without distorting the front cover.

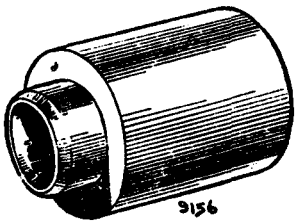

18G 134 L

18G 134 L. Gearbox Rear Oil Seal Replacer Adaptor

For the replacement of gearbox extension oil seals. Use with handle 18G 134 on the Series II and Minor 1000.

18G 134 Q. Rear Hub Replacer and Adaptor

Use with handle 18G 134 on the Series II and Minor 1000.

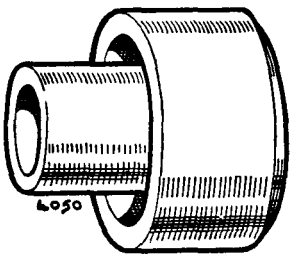

18G 134 Q

18G 389. Gearbox Rear Oil Seal Remover (basic tool)

This basic tool, together with the appropriate adaptor, is essential for removing the gearbox extension oil seal easily and without damage to the extension on the Series II and Minor 1000.

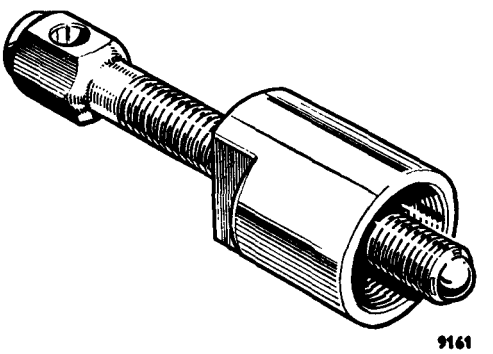

18G 389

18G 389 A. Gearbox Rear Oil Seal Remover Adaptor

Use with basic tool 18G 389 on the Series II and Minor 1000.

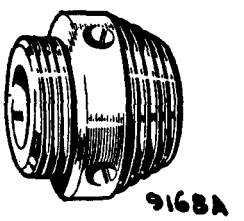

18G 389 A

18G 372. Torque Wrench—30–140 lb. ft.

A universal torque spanner for use with standard sockets. This tool is essential if the recommended maximum torque for various studs is not to be exceeded.

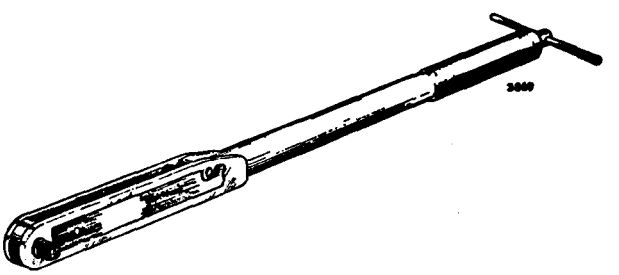

18G 372

18G 124 K. Camshaft Liner Remover Adaptor

For use with basic tool 18G 124 A on the Series II and Minor 1000.

18G 124 K

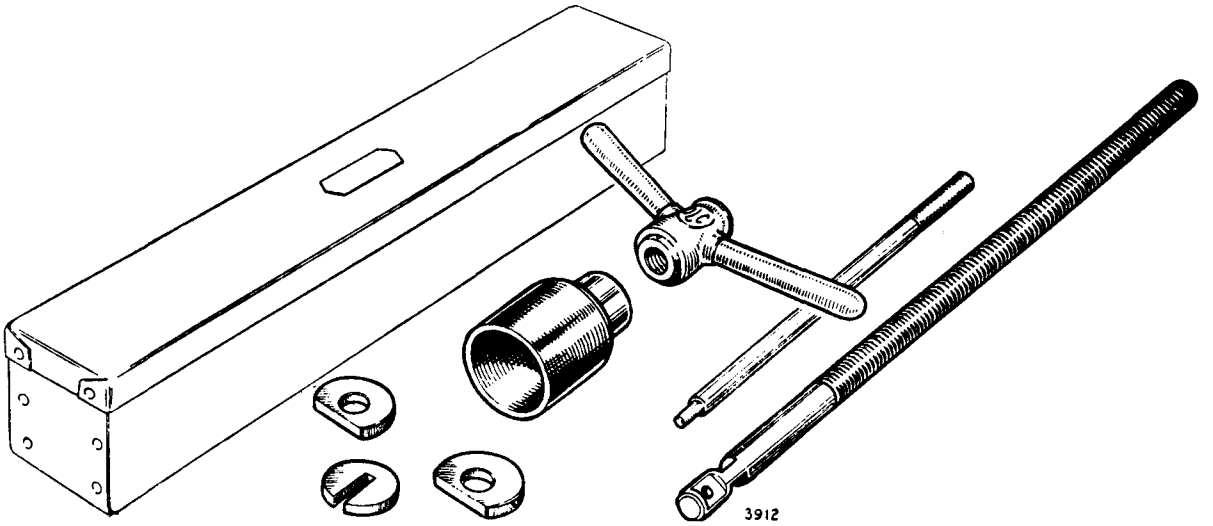

18G 124 A

18G 124 A. Camshaft Liner Remover and Replacer (basic tool)

The equipment consists of a basic tool 18G 124 A and various adaptors for different types of engine supplied separately. The adaptor for the Minor (Series II) and Minor 1000 is shown on page Q.15. Liners can be renewed without the damage invariably associated with the use of improvised drifts. Full instructions for using the equipment will be supplied with each basic tool.

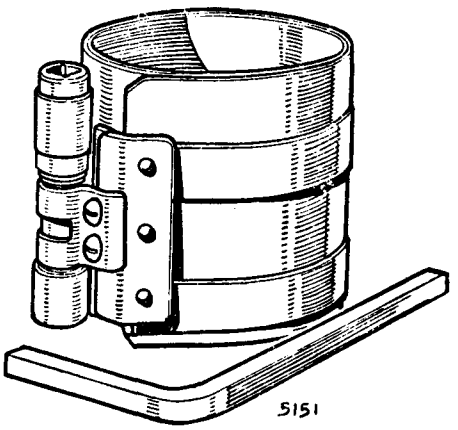

18G 55 A

18G 55 A. Piston Ring Clamp

Designed to cover a wide range of pistons, it is easy to operate and will compress the strongest piston ring, making assembly to the bore a quick and easy operation.

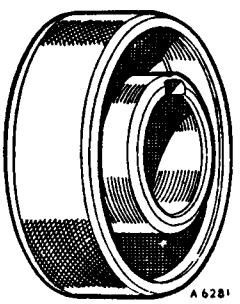

18G 1044

18G 1044. Engine Front Cover Centralizer

This tool ensures that the oil seal and the front cover (later type) are concentric with the crankshaft, thus guarding against oil leaks.

SECTION R

THE BODY

DESCRIPTION

The body and chassis are built on the mono-construction principle as an integral unit. There is therefore no separate body in the accepted sense, and repairs to the structure and panels of the car involve a special technique.

Except that the underframe forms an integral part of the body, there is no fundamental difference between the design of a mono-construction car and one consisting of a normal chassis and all-steel body. Much of the equipment necessary for the latter—such as welding and panel repair equipment—is also applicable to the former.

Experience has shown that even cases of extensive damage, due to collisions, etc., can be repaired effectively and the car rendered fit for a further period of satisfactory and safe service.

Very few cases have been encountered where the damage has been so extensive as to render repair impracticable.

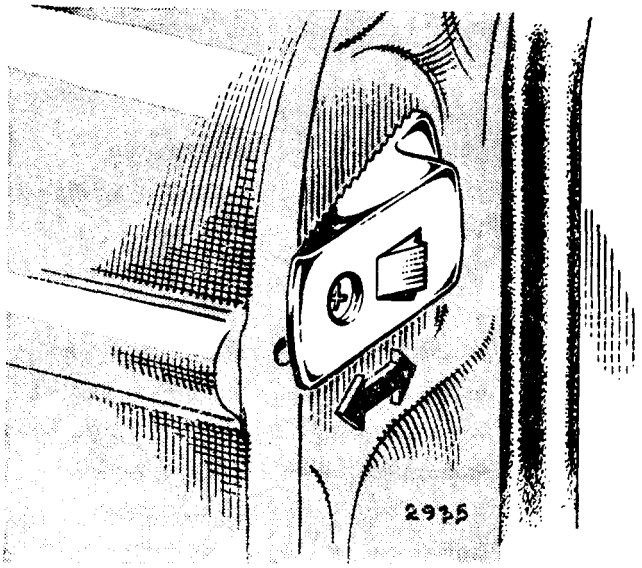

Fig. R.2
The door striker plate on early models, showing its adjustment

Section R.1

ADJUSTMENTS

Bonnet lock

The spring-loaded striker pin may be adjusted for length after slackening the locknut which secures it to the bracket beneath the bonnet lid.

When the pin is correctly positioned the bonnet lid will lock in the fully closed position and also open sufficiently to allow the safety hook to be depressed when the bonnet catch is released by the control ring beneath the instrument panel.

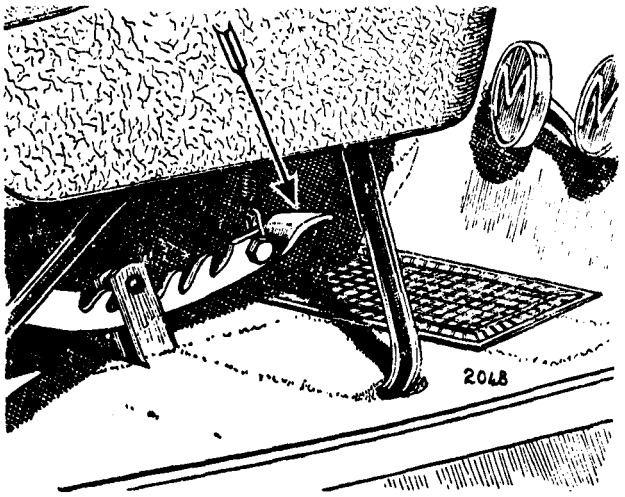

Fig. R.1
The front seat adjustment is effected by depressing the lever shown

Front seats

Each front seat pivots about the forward support and may be raised to allow passengers to reach the rear seats. On later models the squab of the seat is also hinged. The position of the driving seat may be adjusted forwards or backwards when the spring-loaded lever that extends beyond the front of the seat is depressed.

If the normal range of adjustment is not capable of providing comfort for drivers of exceptional stature the seat can be repositioned by moving the seat hinge bracket into the required position on the floor of the car.

Doors and trunk lid

When closed and correctly adjusted, the doors and trunk lid will be a tight fit on the rubber surround. Should a door require adjustment, slacken the two Phillips screws securing the lock striker plate to the door pillar and move the plate in the required direction. Firmly tighten the screws and check the door. If the door will not secure in the fully closed position check the adjustment of the socket plate, which is secured to the door pillar below the striker plate.

Ventilating windows

Provision is made for regulating the frictional resistance of the hinges of the door ventilating windows should they show signs of closing of their own accord under wind pressure.

The insertion of a screwdriver in the larger of the screws in the lower window frame permits the resistance

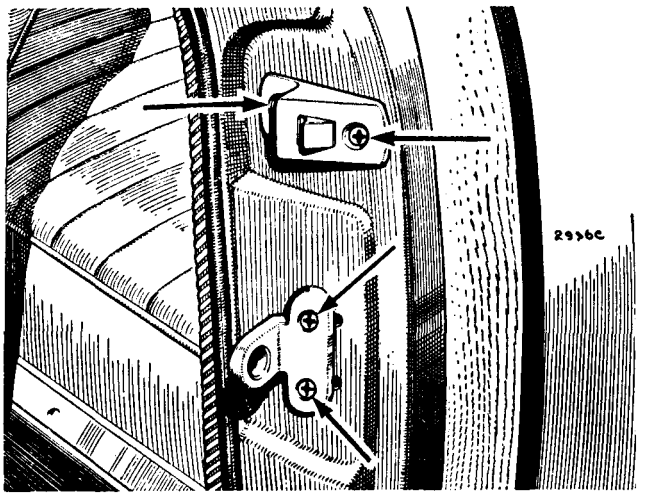

Fig. R.2a

The pin-and-socket door location on later models

of the hinge to be adjusted to the required extent. Some models are fitted with slotted screws and some with Phillips screws.

Section R.2

REMOVAL AND REPLACEMENT OF THE WINDSCREEN (Series MM)

Withdraw the fixing screws and the driving-mirror bolt from the windscreen centre pillar and remove the exterior chromium strip.

Remove the small cover-plates at each end of the centre pillar and remove the pillar.

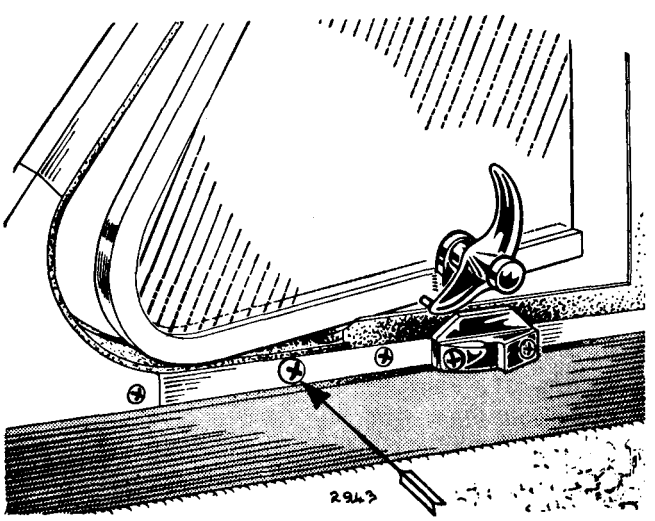

Fig. R.3

The adjusting screw for the ventilating window hinge is shown by the arrow. The Phillips-type screw is shown in this illustration, but some models are fitted with slotted screws

Unscrew and remove the metal mouldings from the inside of the windscreen.

Press the glass towards the inside of the car and remove the rubber seal.

To replace the screen insert the glass in the rubber seal and press the screen into position from inside the car until the outside flange of the rubber seal can be persuaded over the exterior chromium finisher.

Insert a length of string beneath the interior flange of the seal the whole way round the screen, with the ends of the string protruding about 9 in. (23 cm.) beyond the unsealed end of the glass.

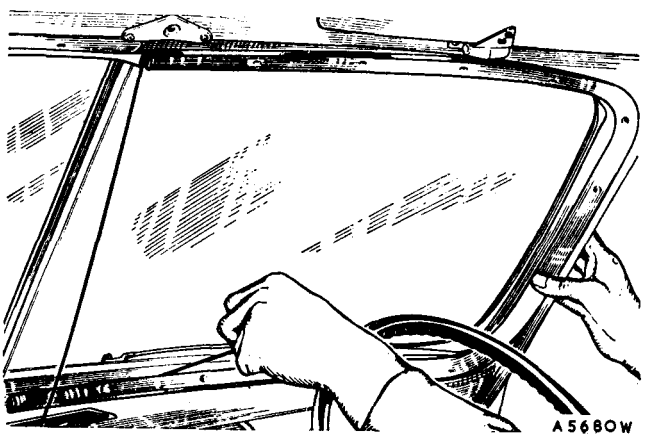

Fig. R.4

Replacing a windscreen glass on early models, showing the use of a length of string to lift the sealing flange over the surround. The metal surround is not fitted on later models

NOTE.—Care must be taken to ensure that sufficient clearance to insert the rubber strip is left between the two windscreen glasses. If necessary, small wooden wedges may be used to ensure this.

Position the interior metal surround with its leather piping and draw the lower end of the string from beneath the seal flange so that the rubber is lifted over the surround. When the lower end of the screen is correctly positioned insert two of the retaining screws and carry out a similar procedure at the top, continuing until the string is withdrawn completely.

Replace all the metal surround fixing screws, but before tightening them straighten the edge of the rubber should it be necessary.

Place a strip of $\frac{1}{8}$ in. (3·2 mm.) square-section Prestik sealer across each end of the channel between the two screen glasses and cover the full length of the channel with a strip of $\frac{3}{4}$ in. by $\frac{1}{16}$ in. (19·2 mm. by 1·6 mm.) Prestik, overlapping the small chromium finisher plate at each end.

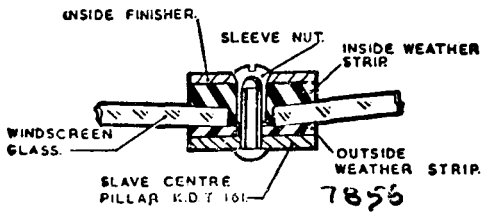

Fig. R.5

This section through the centre pillar shows the relative positions of the components and the slave strip

Replace the rubber centre sealing strip so that the raised portion engages the channel between the screens and then place the metal finisher strip over it, and, having made holes in the sealer, insert the securing screws to hold it in position.

Replace the rubber seal outside the screen and place the chromium finisher over it. Ensure that the small chromium plate at each end of the finisher is in position, and get a second operator to assist by tightening the screws from inside the car while the finisher is held in position.

Refit the two interior centre pillar cover-plates.

On cars commencing with Car No. 26102 R.H.D., from Car No. 10607 L.H.D.

Withdraw the fixing screws and driving-mirror bolt from the screen centre pillar and remove the inside centre finisher.

Extract the securing screws and remove the interior screen mouldings and centre cover-plates.

Remove the exterior chromium pillar and small capping plates and prise the outer chromium finisher strip from the rubber seal. Withdraw the rubber strip from between the windscreen glasses and remove the screen-retaining screws from each side pillar.

Press each glass towards the inside of the car, commencing at one corner, and carefully ease the sealing rubber from the metal edge of the windscreen housing.

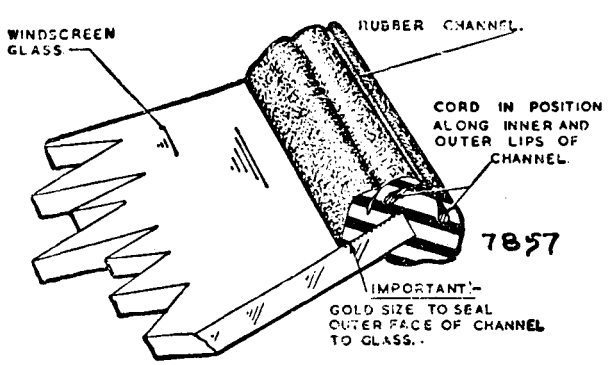

Fig. R.6

Cords must be inserted in the lips of the rubber channel as shown after the channel has been fitted to the glass with gold size

Before attempting to refit the windscreen glasses in the body they must be assembled with the finishers and weather sealing strips into the surrounding rubber channel. For this operation a slave centre pillar is required and should be made up from ⅛ in. (3·2 mm.) thick mild steel strip 12 in. (30·5 cm.) long with four holes drilled and tapped 2 B.A. thread at 3½ in. (8·9 cm.) centres, starting ¾ in. (1·9 cm.) in from one end.

Fit the 'T'-section interior weatherstrip, the outside weatherstrip (two in the case of laminated glass), and fit the slave centre pillar.

Fit the inside finisher and secure the assembly with three sleeve nuts through the three lower holes in the inside centre pillar finisher (four on later models). Do not fully tighten the sleeve nuts (see Fig. R.5).

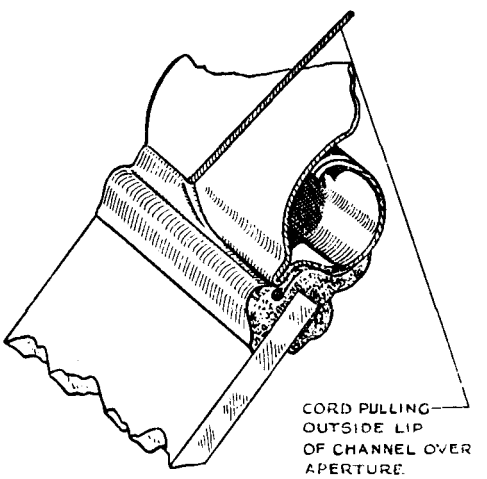

Fig. R.7

Withdrawing the cord to draw the lip of the channel outside the body panel flange

The glass channel portion of the rubber seal should be brushed with gold size (Seelastik in the case of laminated glass) and the seal immediately fitted round the windscreen glasses. Care should be taken to see that the glass is right home in the channel.

To facilitate the assembly of the windscreen to the car body, lengths of cord, each about 11 ft. (3·5 m.) long, should be threaded round the rubber channel. Insert one cord along the outer lip and the other along the adjacent inner flap, as shown in Fig. R.6. This operation is easily carried out if one end of the cord is threaded through approximately 6 in. (15 cm.) of small-diameter tubing—brake pipe is ideal. Radius one end of the tube inside and out and bell out the opposite end. Allow 6 in. of the cord to protrude from the plain end of the tube and then press that end of the tube into the channel in which it is desired to lay the cord. Run the tube round the channel, allowing the cord to flow

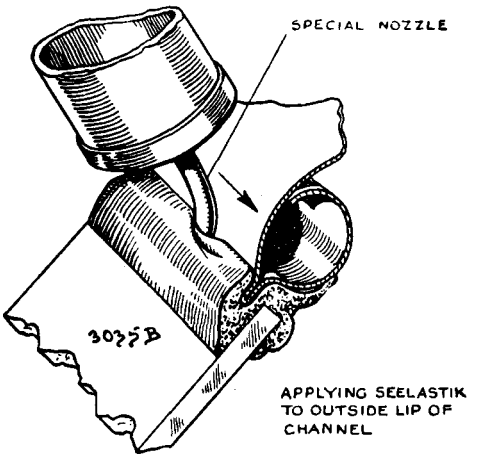

Fig. R.8

Inserting the Seelastik compound between the channel lip and the body panel with the help of a pressure gun and tubular nozzle

freely through it until it surrounds the screen and the free ends overlap and suspend from the screen. The ends should be long enough to permit a good pull when the screen is being assembled to the body. Finally, apply petroleum jelly to the windscreen rubber channel over the outer lip and outer finisher lip.

In order to obtain a good glass-to-rubber seal it is advisable to fit the windscreen as soon after the application of gold size (or Seelastik in the case of laminated glass) as possible, approximately within 10 minutes.

To fit the windscreen to the body it must be offered to the windscreen aperture from inside the car. With the assembly pressed into position from the inside, the outer cord must be pulled away progressively round the aperture to draw the outside lip of the rubber channel over the flange as shown in Fig. R.7.

The cord beneath the interior lip should next be drawn out, leaving the lip in the position seen in Fig. R.8. Tap the rubber round the inside edge of the windscreen to ensure complete seating of the assembly.

Remove the slave centre pillar and outside weatherstrip and place a strip of black Prestik sealer (Part No. 135625) $\frac{3}{4}$ in. by $\frac{1}{16}$ in. by 16 in. (19·2 mm. by 1·6 mm. by 40·6 cm.) long over the outside surface of the glasses at the centre joint. Replace the weatherstrip (two in the case of laminated glass) and fit the plated centre pillar. Secure in position with the three sleeve nuts (four on later models) in the lower holes of the inside centre pillar finisher. Do not tighten the sleeve nuts (see Fig. R.5).

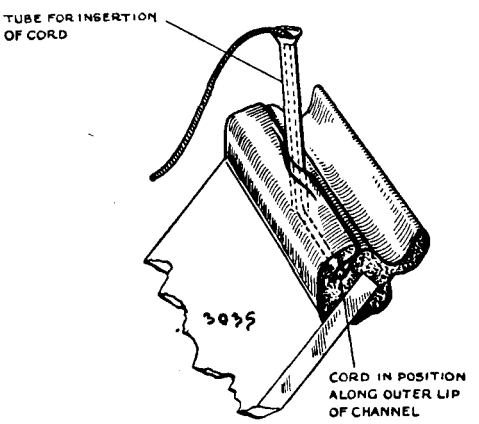

Fig. R.10

Inserting the cord in the outside lip of the rubber channel prior to fitting the plated finisher

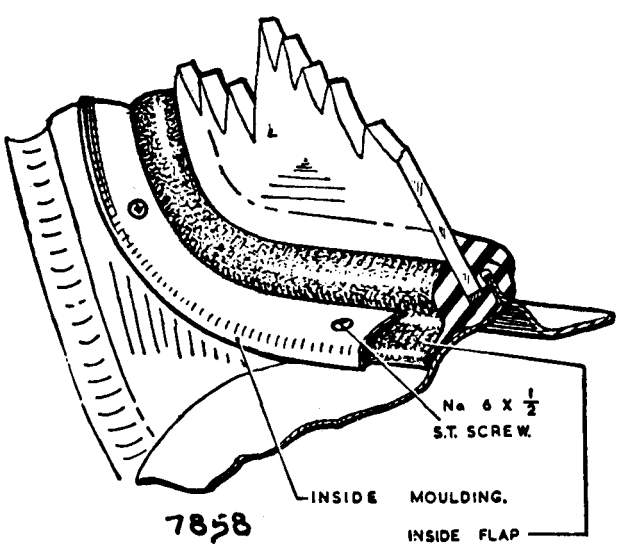

Fig. R.9

The inside lip of the rubber channel is concealed by a metal moulding strip

Seelastik sealing compound should be injected between the outer lip of the rubber channel and the body flange. The application must be evenly distributed right round the windscreen. To ensure this the outside lip should be firmly pressed down, with the fingers or a wooden roller, to spread the sealing compound under the rubber seal.

Fig. R.8 shows the method of applying Seelastik sealing compound between the channel lip and body flange, using an Expandite pressure applicator gun if possible fitted with a special $\frac{3}{16}$ in. (4·8 mm.) bore brass tube nozzle.

Replace the inside windscreen mouldings and secure in position with the self-tapping screws. The moulding centre cappings are secured in a similar manner (see Fig. R.9).

Insert a length of cord in the outside chromium finisher channel with the help of a feeding tube, commencing the operation at the top of the windscreen

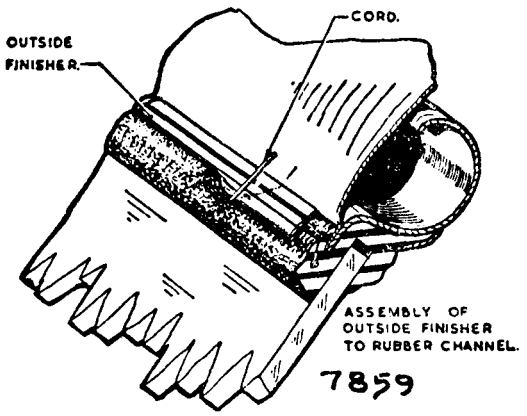

Fig. R.11

Withdrawing the cord and simultaneously inserting the plated finisher

centre pillar and continuing round the channel until both free ends of the cord are above the pillar (see Fig. R.10).

Insert the end of one windscreen outside finisher in the channel at the top of the centre pillar and simultaneously draw out the cord and press in the finisher. Repeat the operation to fit the other finisher (see Fig. R.11).

The outside centre cappings should be pressed into the channel beneath each end of the centre pillar and the sleeve nuts finally tightened up, from inside the car, to secure the assembly.

Refit the interior mirror bar into the upper hole of the inside centre finisher on earlier models, or the special boss on later models, and trim off any rubber or Prestik protruding either side of the plated exterior pillar. Clean all traces of petroleum jelly, gold size, or Seelastik from the glass and rubber seal.

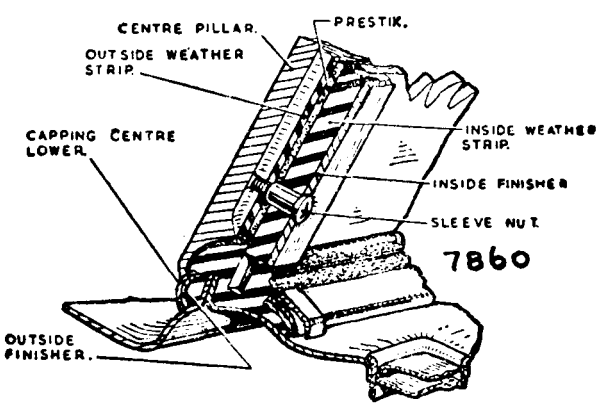

Fig. R.12

A section through the centre screen pillar, showing the final assembly of the components

Section R.3

REMOVAL AND REPLACEMENT OF THE REAR LIGHT

Remove the Phillips screws securing the metal surround to the body on early models.

Push the glass and rubber seal towards the inside of the car until it is free.

To replace the glass lay a strip of Prestik round the edge on the outside (convex side) of the glass and fit the rubber seal with the flat side on the inside (concave side) of the glass and the joint at the centre top.

Insert a length of string beneath the outer flange of the rubber with the ends protruding at the joint.

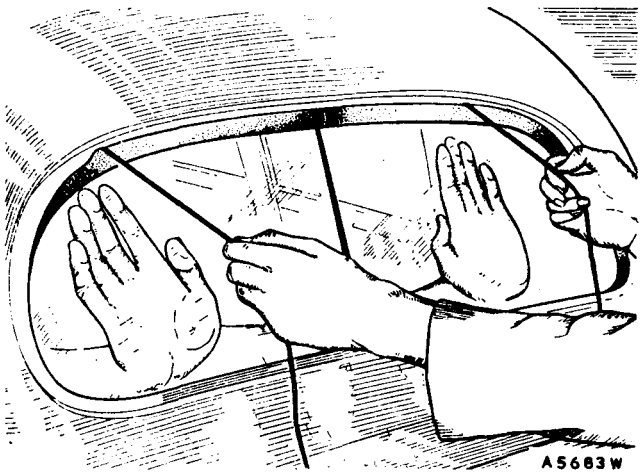

Fig. R.13

The rear light glass is fitted in the same manner as the windscreen, with the help of a piece of string to lift the flange of the rubber sealing strip into position over the metal edge of the window

Place a strip of Prestik inside the edge of the window opening and, with the aid of a second operator to apply hand pressure to the glass from inside the car, draw the string from the rubber seal so that the flange is lifted over the metal edge of the window opening (see Fig. R.13).

Replace the metal surround on early models. Later models have no metal surround, but clips are provided to support the rear ends of the roof trim panels.

Quarter-lights

The quarter-light glasses are fitted from inside the car in a similar manner with Prestik on the inside of the body flange and the outside of the glass.

Section R.4

REMOVAL AND REPLACEMENT OF THE DOOR GLASS

Remove the window regulator handle and interior door handle. Carefully prise off the door trim panel.

Remove the rubber grommets from the edge of the door and extract the three bolts securing the door glass channel.

Unscrew the two bolts from the under side of the ventilator panel and the bolt and nut securing the lower end of the glass channel to the door.

Wind the window glass up until the quadrant arm can be disengaged from the lift channel and the whole assembly lifted from the door.

Replacement

Place the glass in the frame assembly and engage the lower ends of the guide channel with the door. With the glass at the top of the channel, engage the winder quadrant arm with the lift channel below the glass.

Lower the glass with the winder and assist the frame assembly to follow into position.

Place the sealing rubber in position beneath the ventilator frame.

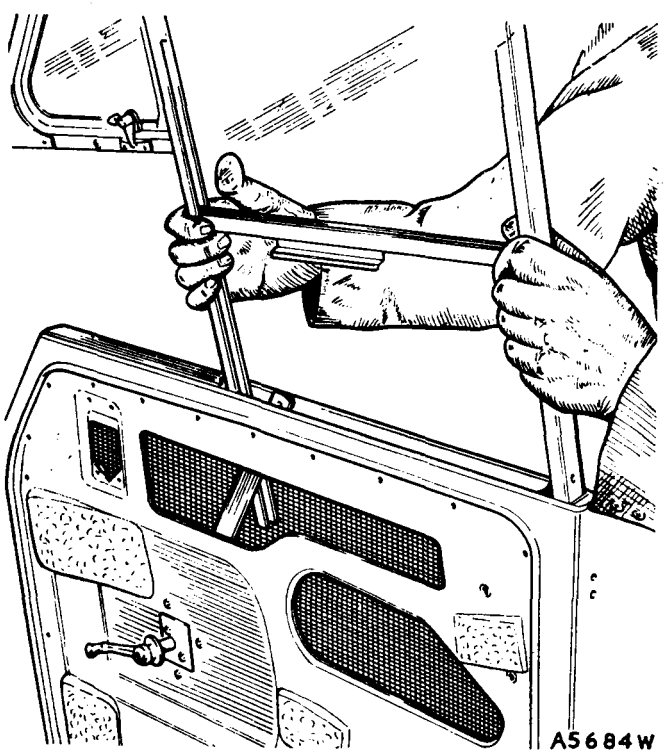

Fig. R.14
Removing the door window assembly

Section R.5

REMOVAL OF THE DOOR HANDLE AND LOCK ASSEMBLY

Remove the door glass channel assembly as detailed in Section R.4.

2-door models and Traveller

Withdraw the split pin, spring, and flat washer securing the remote control link to the lock plunger.

Remove the three Phillips screws securing the handle and lock, and withdraw the assembly from the door.

Before removing the lock from the door fitted with an interior safety catch (two-door models) extract the spring clip and withdraw the door locking lever. Immediately the lock assembly has been withdrawn replace the locking lever and retaining clip to prevent loss of the lock bolt, which is free to fall out if the lock is inverted.

On later models the lock bolt is retained in position by a pin and thus remains in the body of the lock unless the pin is withdrawn.

To replace the lock bolt withdraw the locking lever and spindle and replace the lock bolt in its housing from

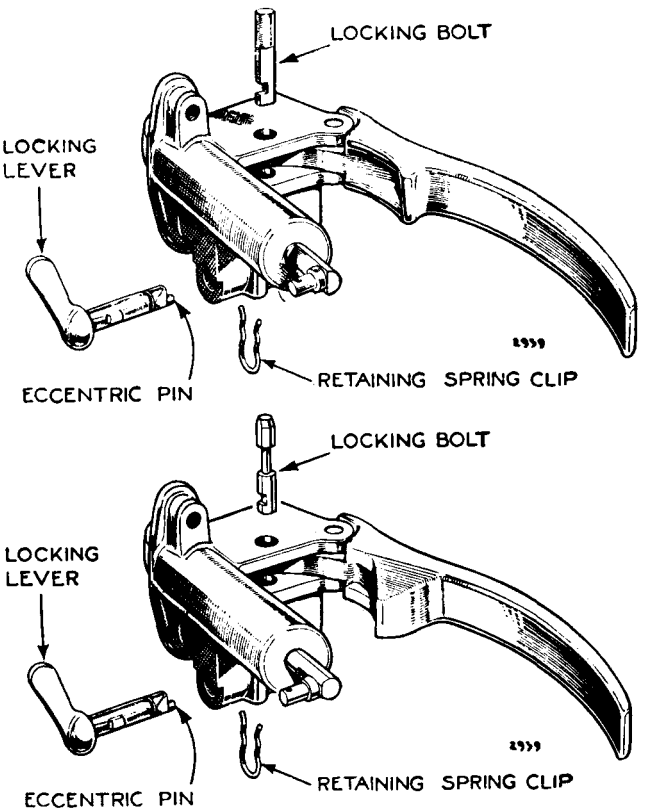

Fig. R.15
Above is shown the original door lock and handle assembly, with retaining spring clip and eccentric pin on the locking lever, which must engage the locking bolt. The lower illustration is of the modified-type lock fitted on later models. (2-door models and Traveller)

the top with its slotted end downwards and facing the inside of the lock. Insert the locking lever with the handle upwards so that its eccentric pin engages the bolt slot. Insert the retaining spring clip.

On models fitted with escutcheons to the door handle opening the escutcheon is removed by releasing the Spire tension locknut retaining it in position. When replacing an escutcheon hook the front end in the door panel cut-out, feeding the peg at the other end through the hole in the handle depression, and fix it in position with the Spire locknut.

4-door Saloon

Remove the screw securing the escutcheon to the guide plate; remove the escutcheon from the handle.

Unscrew the three screws securing the guide plate and handle to the edge of the door; withdraw the handle. The upper screw is shorter than the other two.

Unscrew the four screws securing the remote control to the door panel and the two screws securing the lock.

Support the lock and push the remote control into the door. Lower the lock and withdraw the lock and remote control assembly through the hole in the door panel.

Section R.6

REMOVAL OF THE FRONT VENTILATORS

Remove the two screws securing the top swivel bearing in the window channel and slacken the raised-head screw in the chromium channel beneath the bottom swivel.

NOTE.—This screw clamps a split bush and can be used to adjust the operation of the ventilator and cause it to remain open in any desired position.

Open the ventilator. Pull out the sealing rubber from the top corner until the upper bearing is free and the ventilator can be lifted out.

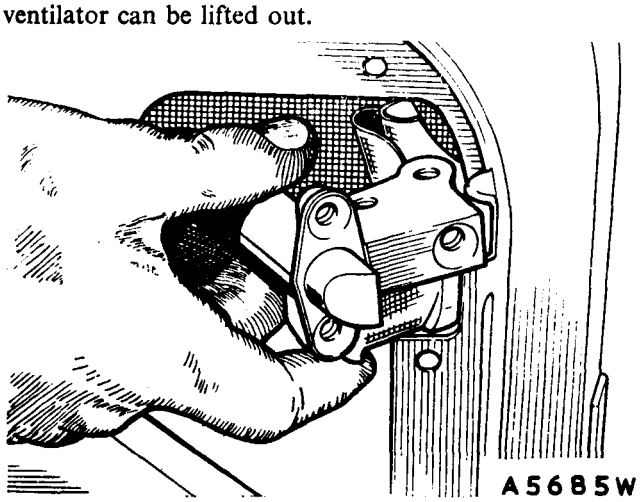

Fig. R.16
Withdrawing the door lock from the inside of the door frame

Section R.7

REMOVAL OF THE WINDOW REGULATORS

Remove the window regulator handle and the interior door handle. Carefully prise the trim panel from the door, to which it is attached by a series of spring fasteners.

Wind the window to the fully closed position and remove the four bolts and spring washers securing the winder to the door.

Disengage the quadrant arm from the glass lift channel and pass it between the guide channel and door panel.

Withdraw the winder assembly from the bottom of the door.

Section R.8

MAINTENANCE OF HOODS ON TOURER MODELS

The hoods on tourer models may be cleaned when required by applying pure soap and water with a brush, such as a clothes-brush.

Only pure soaps should be used, and any of a caustic nature should be avoided.

The hood should subsequently be well washed with clean water.

Hoods should never be folded when wet or damp and should be left in the erected position until dry.

When folding the hood make sure that the folds are not trapped between the hood sticks.

Section R.9

HOOD

RELEASING THE HOOD

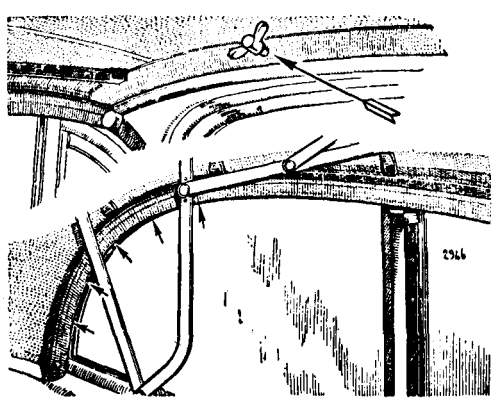

To release the hood on Convertible models it is first necessary to unscrew the two wing bolts attaching the forward end of the hood to the head rail, and on models

fitted with detachable sidescreens to release the two press studs securing the hood to the sidescreens on each side.

RAISING THE HOOD

When raising the hood on later models ensure that the edge of the hood cloth embraces the fixed quarter-lights, particularly where indicated by the arrows.

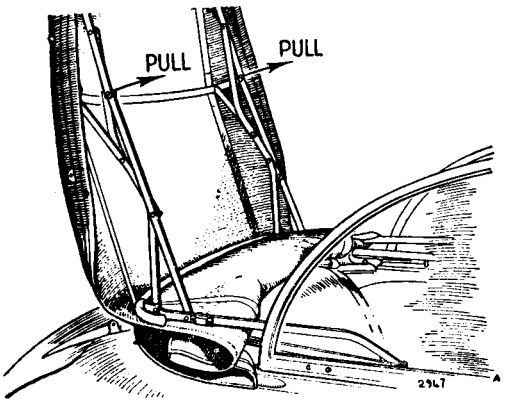

FOLDING THE HOOD

Having released the hood as described above, the hood can be raised upwards and backwards into the position illustrated above. By pulling on the hood members at the position shown the hood can be folded so that the hood sticks lie on top of each other. Take care that the hood material is not trapped.

Draw the hood material rearwards clear of the sticks so that it is free of creases, and fold the corners over as shown at (1). Then fold in half as shown at (2), finally rolling it over the hood sticks as shown at (3).

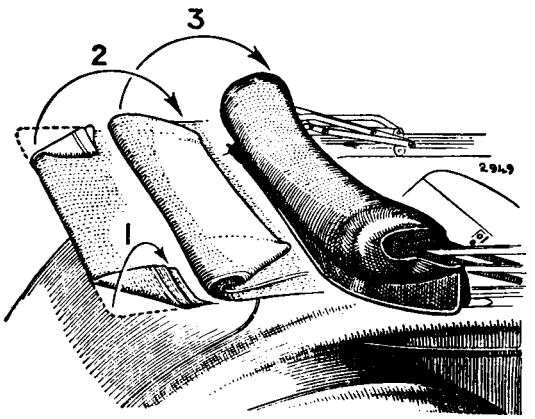

STOWING THE HOOD AND SIDESCREENS

Releasing the rear seat squab by detaching its retaining strap from inside the boot enables the hood cover to be fitted over the folded hood and fastened in position by the press studs shown in the illustrations. The sidescreens on some models are released from the body by lifting them out of their sockets. They can then be inserted in the special waterproof cover supplied and stowed in the spare wheel compartment.

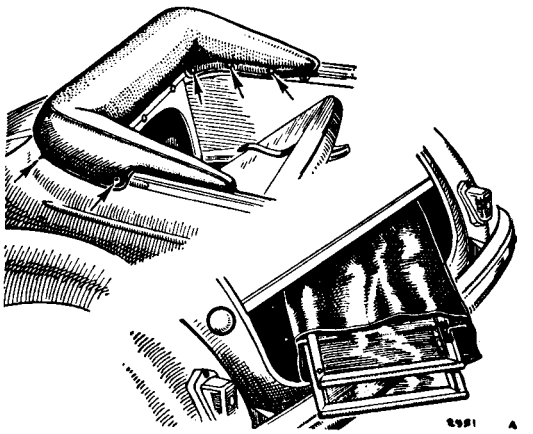

Section R.10

CLEANING UPHOLSTERY

The leather or Vynide upholstery of the Morris Minor may be cleaned by wiping it with a damp cloth and polishing it with a clean soft cloth when it is dry.

In cases of badly soiled upholstery it may be cleaned by the additional use of a little pure soap, but caustic soaps must on no account be used.

Section R.11

LUBRICATION

An oilcan filled with oil to Ref. F (page P.2) should be used sparingly on the door hinges, bonnet lid, and support mechanism periodically.

Coat the door and luggage boot striker plates lightly with grease to Ref. D (page P.2) at the same time.

Section R.12

TOEBOARD REINFORCING PLATES

A few instances have been encountered where cracks have appeared in the toeboard in the region adjacent to the top of the gearbox aperture.

In such cases reinforcing plates should be fitted at the steering gearbox locations as shown in Fig. R.17, the ¾ in. diameter hole being used for the steering-column on one side and for access to the steering gearbox oiling nipple on the other.

Additional support is given to the steering gearbox by the two 1 in. (2·5 cm.) wide strips, the holes of which coincide with the holes for the steering gearbox mounting.

Section R.13

BODY FINISH

As some Morris Minor cars are now being finished in synthetic enamel or Synobel enamel it is necessary to outline the correct methods of repairing this type of finish.

It must be clearly understood that synthetic enamel differs from cellulose enamel fundamentally in that it hardens by a complicated chemical change, known as polymerization, as distinct from the process of evaporation of volatile solvents such as takes place with normal paints and cellulose enamel.

The nature of the synthetic enamel surface is such that it renders the use of cellulose enamel for retouching purposes quite unsatisfactory since the two materials will not knit together properly.

As a result, a special technique has to be adopted when repairing damage to the finish of cars treated with synthetic enamel or Synobel if good results are to be obtained.

Provided the instructions given in the pages of this publication are carried out, no difficulty should be encountered in effecting a good and lasting repair.

There are two ways of dealing with the repair of synthetic enamel. The first is by the use of an air-drying material, and the second is by using a similar enamel to that originally applied to the body with the addition of driers, thus allowing the stoving temperature to be reduced from 45 min. at 265° F. (130° C.) to 45 min. at 180° F. (82° C.).

Synobel is similar in nature to synthetic enamel and requires the same treatment.

Identification

It will be realized that the correct identification of the type of finish on the car to be repaired is of particular importance. **For this reason it is imperative to quote the engine and car numbers of the car for which the repair material is required when ordering, as a check.** These are to be found on the plate fixed to the bulkhead under the bonnet. As a guide, the change points for the various current Morris Minor models are given below.

As a help in identifying the type of finish used on each car symbols have been added to the car type symbol on the identification plate under the bonnet of all cars. Early cars are marked as follows: in the case of synthetic-finished cars the letters 'SYN' are used; in the case of Synobel-finished cars the symbol 'S' is used; and in the case of cars finished in cellulose enamel they are marked with a 'C'.

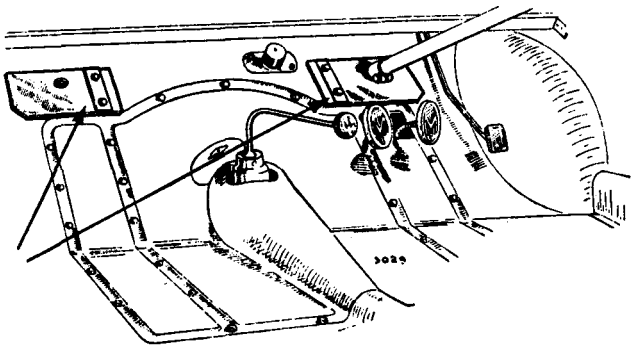

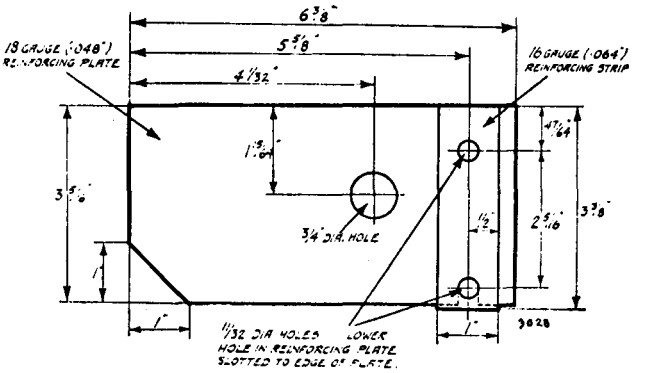

Fig. R.17

The position of the toeboard reinforcement and the dimensions of the plates are clearly shown in the illustrations above

Change points

As a general guide, the following are the change points for the finishes on current Morris Minor cars:

Morris Minor Saloons (Series MM)

All Morris Minor Saloon cars prior to Chassis Nos. 2117 (R.H.D.) and 5855 (L.H.D.) were finished in cellulose enamel.

Morris Minor Saloon cars from Chassis No. 2118 (R.H.D.) and from Chassis No. 5856 (L.H.D.) have been finished either in Synobel or synthetic enamel. Those finished in Synobel are marked under the bonnet with 'S' and those finished in synthetic enamel are marked with the letters 'SYN'.

Morris Minor Tourer (Series MM)

All Morris Minor Tourers prior to and including Chassis Nos. 3871 (R.H.D.) and 6255 (L.H.D.) were finished in cellulose.

All subsequent Morris Minor Tourers have been finished either in Synobel or cellulose, and reference should be made to the symbols on the identification plate to establish the finish used.

Section R.14

AIR-DRYING SYNTHETIC MATERIAL

The damaged portion should be flattened down with 400 grade 'Wet or Dry' paper until a smooth surface is obtained free from defined edges, and then, if necessary, built up with primer surfacer or stopper before being finally faced down to a perfectly smooth and level surface.

The air-drying enamel is then thinned to the desired consistency, usually a 50 by 50 mixture of enamel and thinners, and is then placed into a suction feed cup which is connected to a spray gun of a similar type to the Devilbiss Type 'CH', fitted with a No. 90 nozzle and requiring about 25 lb./sq. in. (1·8 kg./cm.^{2}) pressure for atomization.

Spray the damaged area in a circular motion, giving a wet coat in the centre fading away towards the edges.

Allow the spot to dry for about four hours, and then use a fine cutting compound to remove the dry spray around the outer edge of the sprayed area. Obtain the final lustre by polishing the area with liquid polish.

If the damage is extensive it is often quicker to mask up and spray out the whole panel.

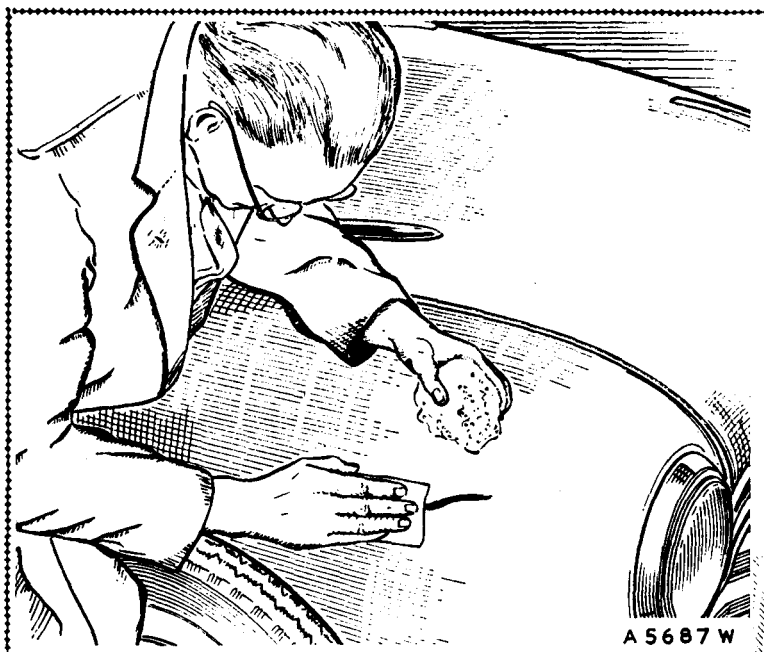

Fig. R.18

(Left) The damaged area should be carefully flattened down, using 'Wet or Dry' paper

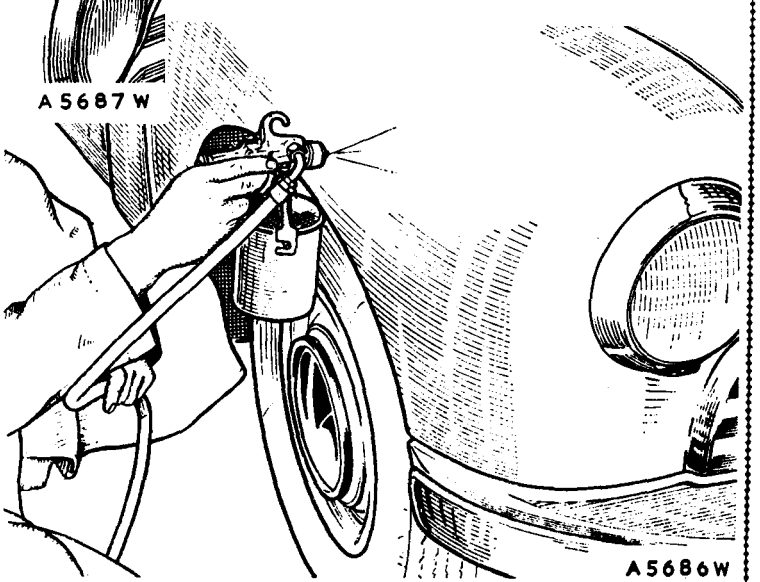

Fig. R.19

(Right) When properly prepared the repair should be sprayed, using a circular motion to obtain a wet coat in the centre fading away gradually to the edges

ENAMELS FOR RETOUCHING

Colour	Part Number		Colour	Part Number	
	1 *pint*	1 *quart*		1 *pint*	1 *quart*
Aluminium	AKJ 1476	AKJ 1477	Mist Green	AKJ 886	AKJ 887
Sandy Beige	AKJ 511	AKJ 512	Birch Grey	AKJ 266	AKJ 267
Black	AKJ 1451	AKJ 1452	Frilford Grey (Minor 1000)..	AKJ 276	AKJ 277
Turquoise	AKJ 26	AKJ 27	Clarendon Grey	AKJ 281	AKJ 282
Clipper Blue (Minor 1000) ..	AKJ 66	AKJ 67	Pearl Grey (Minor 1000) ..	AKJ 306	AKJ 307
Smoke Grey (Minor 1000) ..	AKJ 71	AKJ 72	Gascoyne Grey	AKJ 356	AKJ 357
Smoke Blue	AKJ 136	AKJ 137	Platinum Grey	AKJ 371	AKJ 372
Thames Blue (Minor SMM)..	AKJ 151	AKJ 152	Maroon (Series II and 1000)..	AKJ 1036	AKJ 1037
Sage Green	AKJ 771	AKJ 772	Pale Ivory	AKJ 1501	AKJ 1502
Dark Green	AKJ 806	AKJ 807	Cream	AKJ 1531	AKJ 1532
Empire Green	AKJ 856	AKJ 857	Thinners	AKJ 2001	AKJ 2002
Romain Green	AKJ 881	AKJ 882	Stoppers (1 lb.)	AKJ 2013	—

Section R.15

WATER LEAKS INTO CAR THROUGH BOTTOM OF DOORS

If it is found impracticable to cure this by normal means a positive cure can be effected by lowering the position of the rubber sealing strip at the bottom of the door. This entails drilling a new series of holes at the bottom of the inside door panel 1 in. (25 mm.) below the original holes, which will be left exposed when the rubber is fitted in the new position. This must be pointed out to the owner. If he is agreeable to the modification and prepared to accept the appearance of a row of redundant holes proceed as follows:

(1) Remove the rubber sealing strip which is fitted to the bottom of the door panel by spring fasteners, taking care not to damage the rubber.

This is best carried out by gripping the ends of the clip with a pair of long-nosed pliers to contract it so that it can be withdrawn easily through the hole.

(2) Drill 12 holes ¼ in. (6·5 mm.) in diameter in each door 1 in. (25 mm.) below the centre-line of the existing holes.

(3) Reinsert any spring fasteners which have become displaced into the holes in the rubber sealing strip.

(4) Refit the rubber strip in the lower holes by pressing the fasteners into the new holes.

The lower position of the sealing rubber causes any water which seeps between the trim pad and the panel to run down on the outside of the sill and drain away at the ends instead of creeping over the top of the sill into the car interior.

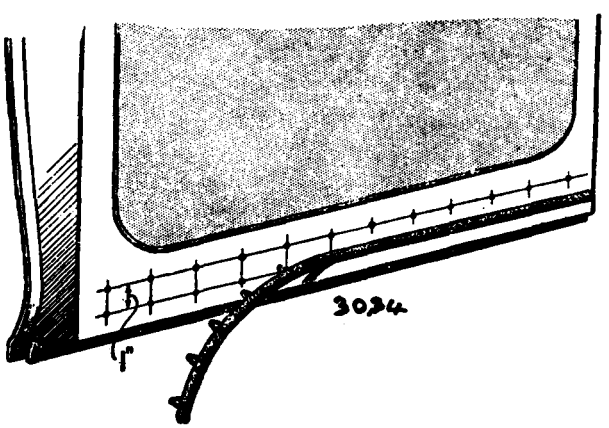

Fig. R.20
Showing the repositioning of the holes for the sealing strip

Section R.16

WATER LEAKS INTO CAR BETWEEN INNER PANEL AND TRIM PANEL

When water is found to be entering the car at the bottom edges of the trim panels of the doors the simplest cure is to close up the apertures in the lower part of the door with a waterproof material such as thin, bitumen-coated felt (Flintkote).

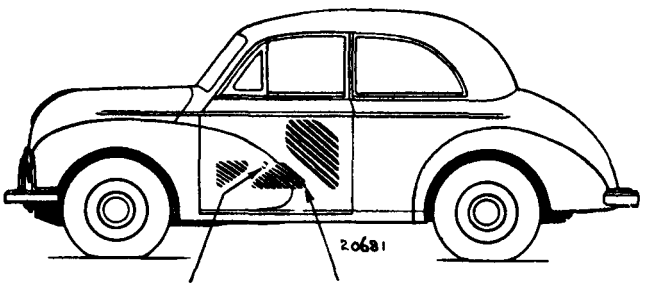

Fig. R.21

The apertures in the door panels which may require sealing

To do this remove the trim panels from the doors by withdrawing the spring fasteners from their holes in the door panel; cut pieces of waterproof felt to fit the apertures in the door panel as shown in Fig. R.21. Fasten the felt to the panels with Bostik adhesive.

A little Bostik should also be applied around the head of the bolt which fixes the bottom leg of the window frame.

Section R.17

WAIST-RAIL WEATHERSTRIP

Cars not fitted with a weatherstrip between the outer door panel at the waist-rail and the door glass can be so equipped in the following manner.

Remove the trim panel from the door by withdrawing the spring fasteners from their attachment holes in the door panel.

Remove the glass channel stop pad to allow the glass to drop as low as possible.

Drill two holes $\frac{3}{64}$ in. (3·6 mm.) diameter in the top lip of the outer door panel in the positions shown in Fig. R.22.

Place the fixing angle (Part No. 181222/3) in position as shown in sections (A–A) and (C–C) and scribe the positions of the holes in the door panel upon it. Note that the fixing angles are right- and left-handed, and make sure that they are fitted correctly.

Drill two holes in the fixing angle in the marked positions $\frac{7}{64}$ in. (2·8 mm.) in diameter.

Apply the drilled angle to the door and fix in position with self-tapping screws.

Insert the spring fasteners into the contour strip (Part No. 129500), and snap them in position into the holes in the fixing angle as shown.

Replace the glass channel stop pad with suitable adhesive.

Refit the trim panel to the door. This reduces the amount of water reaching the inside of the door and also reduces the amount of draught.

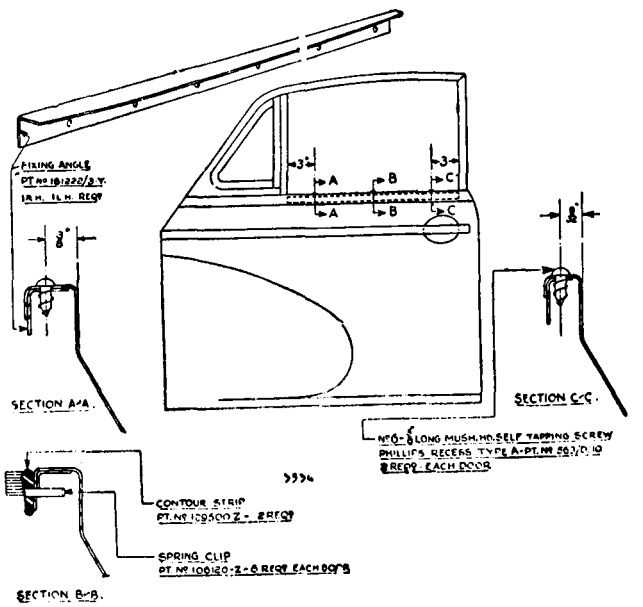

Fig. R.22

The fitting of the waist-rail weather sealing strip

Section R.18

LENGTHENED BONNET AND NEW HEADLAMPS

The introduction of a lengthened bonnet and separate headlamps and sidelamps has caused slight modifications to the front end assembly in the course of which the headlamp cowls have been deleted and the body front side panels (valances) extended to the radiator grille panel.

The deletion of the headlamp cowls has been accompanied by the repositioning of one of the lower fixing bolts on each side of the radiator grille panel and the addition of a rubber sealing strip between the valance and the grille panel.

This change also affects the sidelamp cables, which pass through a hole in each valance protected by a rubber grommet.

Originally the headlamp cowl fixing bolts also carried the bonnet catch tab, the sidelamp earthing terminals, and the lamp wiring clips. Now the valances are provided with a $\frac{1}{4}$ in. bolt for the attachment of these components.

Section R.19

WATER LEAKS AT DRIP MOULDING

If water is finding its way into the front pillar the trouble may be rectified in the following manner.

The intersection between the roof panel and the drip moulding should be sealed off with Prestik, which can be obtained in round strip $\frac{5}{32}$ in. (4 mm.) in diameter and coloured red, grey, or black, to suit the finish of the car, from Messrs. B. B. Chemical Co. Ltd., Ulverscroft Road, Leicester, England.

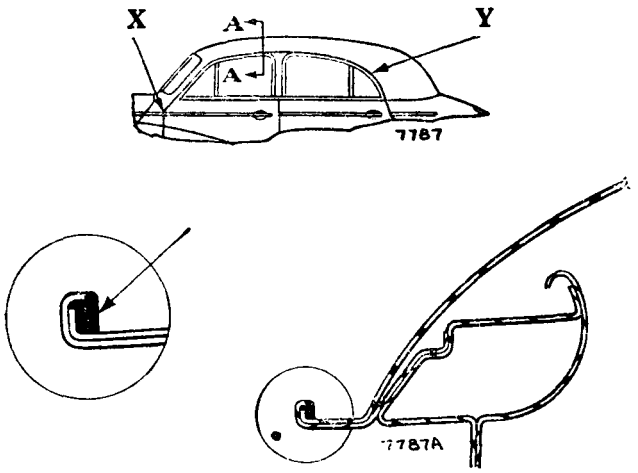

Fig. R.23

The correct location of the Prestik sealing compound to deal with water leaks from the drip moulding

The Prestik should be warmed before application and thoroughly forced into the joint recess with the fingers, filling the recess in the drip moulding as shown in the illustration. Sufficient pressure must be used to ensure that the Prestik is really forced in between the edges of the panels to seal off the joint. It can afterwards be smoothed off with a smooth piece of wood moistened with a little oil.

Any surplus material may be trimmed off with a blunt knife.

This filling should be carried out uninterrupted from point (X) to point (Y) indicated in the illustration.

Section R.20

SUSPENDED ROOF LINERS

The suspended rexine roof liner fitted to later models is located in the roof channel above the windscreen by two spring clips fastened to the liner plyboard fillet. From front to rear the rexine lining is slung on four equally spaced lists braced between the left-hand and right-hand roof side reinforcement and held in place around the back-light by retaining clips and plates. The liner is tensioned by Bowden cables passing through the front and centre pillars, roof rear reinforcement section and gusset plate, and around the back-light reinforcement section. The cable ends are secured by plain washers and self-tapping screws.

Removal and replacement

Release the self-tapping screw securing the tensioning cable under the dash reinforcement panel on each side of the car. For ease of replacement join a length of wire to the end of each cable before withdrawing it through the front pillars, disconnecting the wire at the top of each pillar and leaving it in position in readiness for replacement of the tensioning cable.

With a flat screwdriver carefully release the two concealed spring clips secured to the reinforcement front plyboard fillet which retain the liner in the channel section above the windscreen.

After removing the rear squab and seat remove the right-hand and left-hand arm-rest and quarter liner on the two-door model, and release the self-tapping screws securing the side tensioning cables to the right-hand and left-hand pillar flange, again joining a length of wire to each cable to facilitate replacement.

On the four-door model the centre pillar trim pads must be removed. A side tensioning cable is fitted to the trafficator top fixing screw or, on later models, a separate screw fitted above the trafficator unit. The rear wheel arch rocker liners may now be removed, which will reveal a further tensioning cable secured to the rear quarter inner reinforcement panel.

Slacken the self-tapping screw and washer which secures the side tensioning cable passing through each roof rear reinforcement section and gusset plate.

Remove the rear shelf top lining to gain access to the fixing of the tensioning cable around the back-light reinforcement. The cable is pulled down on each side of the back-light and is secured to the upper rear squab support panel by washers and self-tapping screws. Remove the rear light by pushing the glass and rubber seal towards the inside of the car until it is free. Extract the tacks which secure the rear bottom edge of the liner to a fibre strip on each side of the rear shelf and slacken the self-tapping screws to release the tensioning cable. Remove the two retaining plates from the rear light aperture and seven self-tapping screws securing the retaining clips which hold the roof trim around the back-light. On later models the retaining plates and clips are welded to the body and the liner must be released from them.

The whole liner assembly may now be withdrawn carefully from the rear of the roof side reinforcement section.

Replacement of the slung roof liner is by a reversal of the above procedure, using the threaded wires to draw the tensioning cable down the front and centre pillars.

Fitting centre roof aerial only

When fitting an aerial above the centre of the windscreen the two self-tapping screws securing the roof liner tensioning cables under the dash reinforcement panel must be slackened to release the cables, and a length of wire joined to each tensioning cable to facilitate replacement.

With a flat screwdriver carefully release the two concealed spring clips fastened to the front plyboard fillet which secures the rexine roof liner in the channel section above the windscreen.

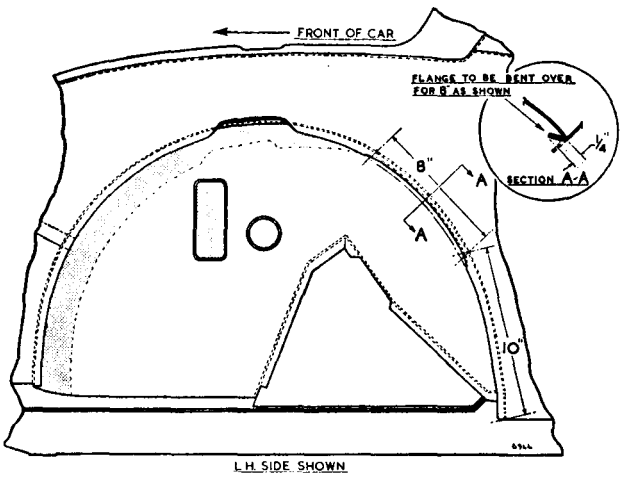

Fig. R.24

To prevent damage to the front tyres under very rough road conditions bend the wheel arch flanges to the dimensions given here

The rexine liner may now be eased backwards and attention given to the roof for the fitting of an aerial.

To refit the rexine liner press the front plyboard fillet into the channel section above the windscreen, draw the cables down the front pillars, and secure with the self-tapping screws under the dash reinforcement panel.

Section R.21

FRONT WHEEL ARCH MODIFICATION

It has been established that under certain conditions on rough roads the front tyres can be damaged by the flange on the wheel arch.

To obviate this possibility the flange may be dressed back locally to the dimensions given in Fig. R.24.

Section R.22

PRESERVATION OF ASH FRAMEWORK (Traveller)

In tropical climates or climates with a high humidity, heavy rainfall, or other adverse conditions there is a tendency for the finish of the wooden framework to become darker.

This may be caused by the varnish sinking into the open-grain areas of the wood and allowing moisture to penetrate.

It is advisable to apply an additional coat of varnish to new shipments immediately or, at the latest, within two or three weeks of off-loading. The existing finish should be lightly sanded before the application of an additional coat. A suitable varnish is Dulux Coach Varnish, Reference No. 48–81, Part No. AFH 2850.

Vehicles already in service should be similarly treated.

Section R.23

REMOVING AND REPLACING THE WINDSCREEN (Minor 1000)

Extract the three screws securing the driving-mirror and remove the mirror.

Press the glass from the inside of the car, commencing at one corner, and carefully ease the sealing rubber from the metal edge of the windscreen housing.

Before attempting to refit the windscreen glass to the body it should be assembled into the rubber channel. Make sure that the glass is right home in the channel.

To facilitate the assembly of the windscreen to the car body and the outside finisher to the glass lengths of cord each about 15 feet (4·6 m.) long should be threaded around the rubber channel. Insert one length of cord into the channel to be fitted over the metal edge of the windscreen housing and the other into the

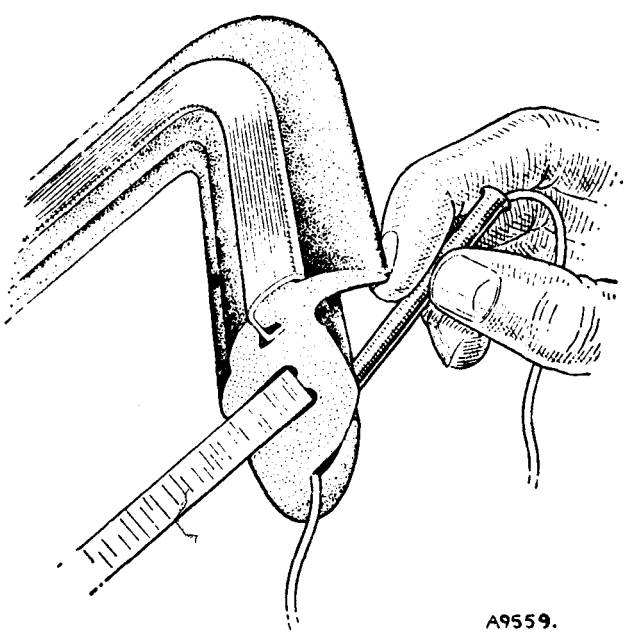

Fig. R.25

Threading the cord into the body flange channel of the seal with the aid of a steel tube

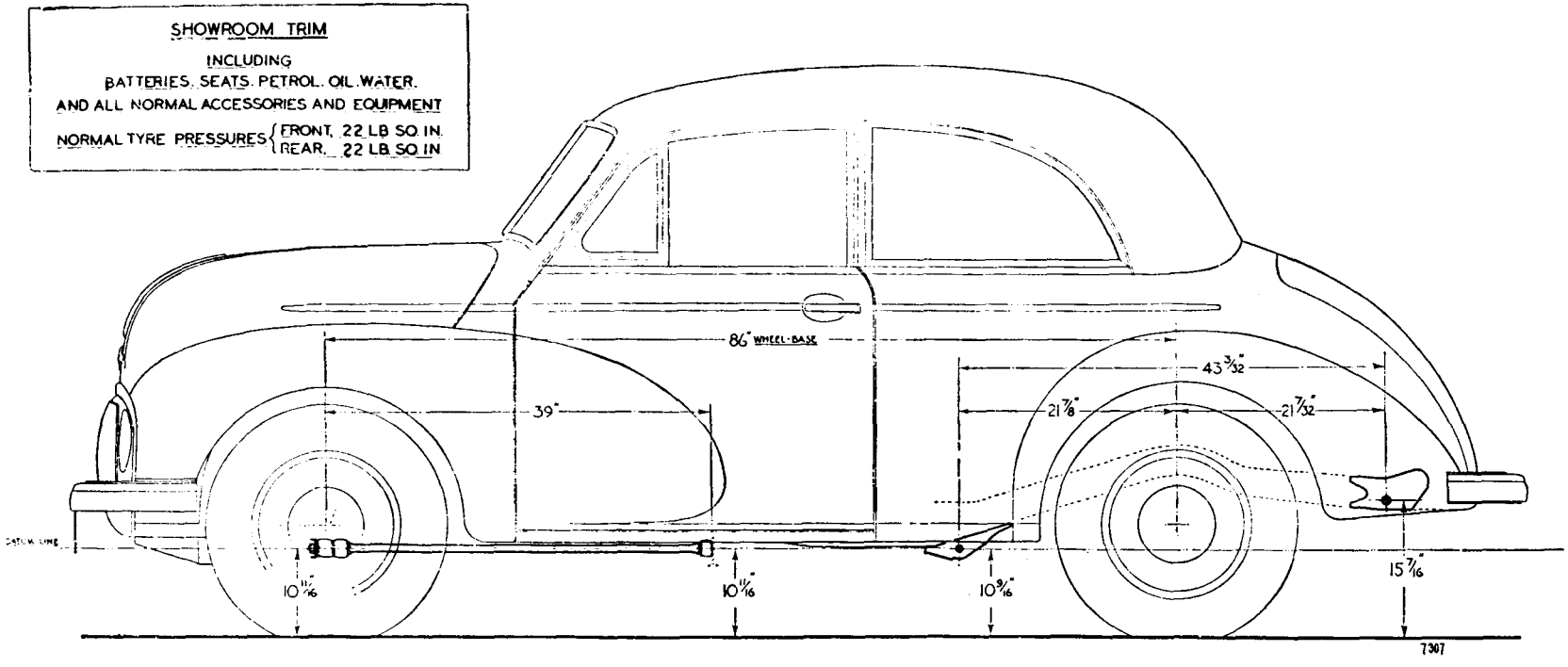

ALIGNMENT DIAGRAM FOR MORRIS MINOR, SERIES "MM"

The diagram indicates the main dimensions required for checking the body for distortion in the vertical plane after an accident.

It must be remembered that the important point is the relative positions of the vertical datum points to each other and not their actual height from ground level, although these dimensions are given to facilitate checking.

THE MORRIS MINOR ALIGNMENT CHART

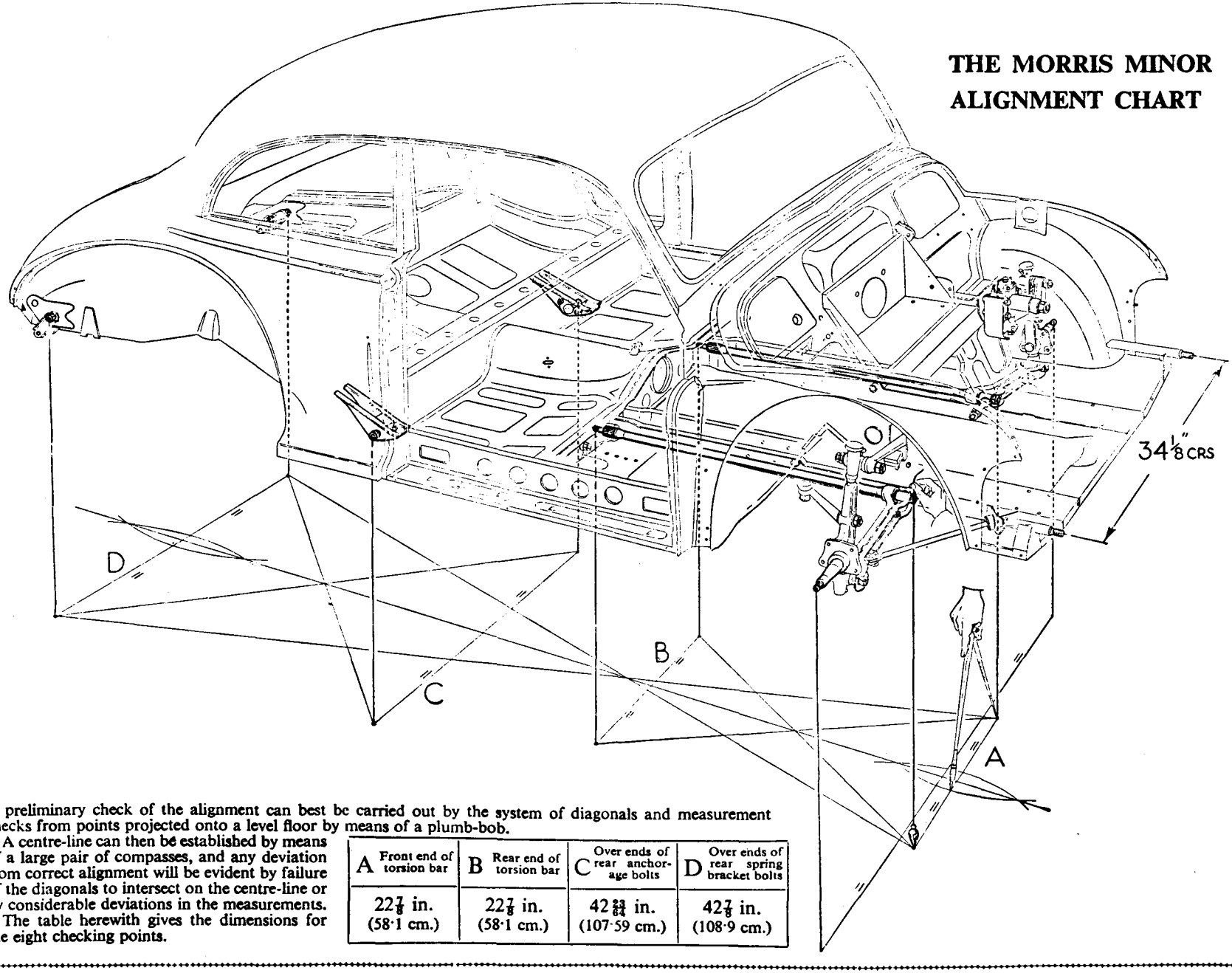

A preliminary check of the alignment can best be carried out by the system of diagonals and measurement checks from points projected onto a level floor by means of a plumb-bob.

A centre-line can then be established by means of a large pair of compasses, and any deviation from correct alignment will be evident by failure of the diagonals to intersect on the centre-line or by considerable deviations in the measurements.

The table herewith gives the dimensions for the eight checking points.

A Front end of torsion bar	B Rear end of torsion bar	C Over ends of rear anchorage bolts	D Over ends of rear spring bracket bolts
22 7/8 in. (58·1 cm.)	22 7/8 in. (58·1 cm.)	42 23/64 in. (107·59 cm.)	42 7/8 in. (108·9 cm.)

finisher channel on the outer side. It is convenient to have the ends of the inner cord at the bottom of the windscreen and the ends of the outer cord at the top.

Threading the cords is easily carried out if one end of a cord is threaded through approximately 6 in. (15 cm.) of small-diameter tubing—brake pipe is ideal. Radius one end of the tube inside and out and bell out the opposite end. Allow 6 in. (15 cm.) of the cord to protrude from the plain end of the tube and then press that end of the tube into the channel to which the cord is to be fitted. Run the tube around the channel, allowing the cord to flow freely through it until it surrounds the windscreen and the free ends overlap and hang from the windscreen. The ends should be long enough to allow a good pull when the windscreen is fitted.

Insert one edge of an external finisher into the channel in the rubber, press in position, and finally position by withdrawing the string. Insert the second finisher in the same manner and fit the upper and lower cappings.

To fit the windscreen to the body it must be offered to the windscreen aperture from outside the car. With the assembly pressed into position from the outside, the inner cord must be pulled away progressively round

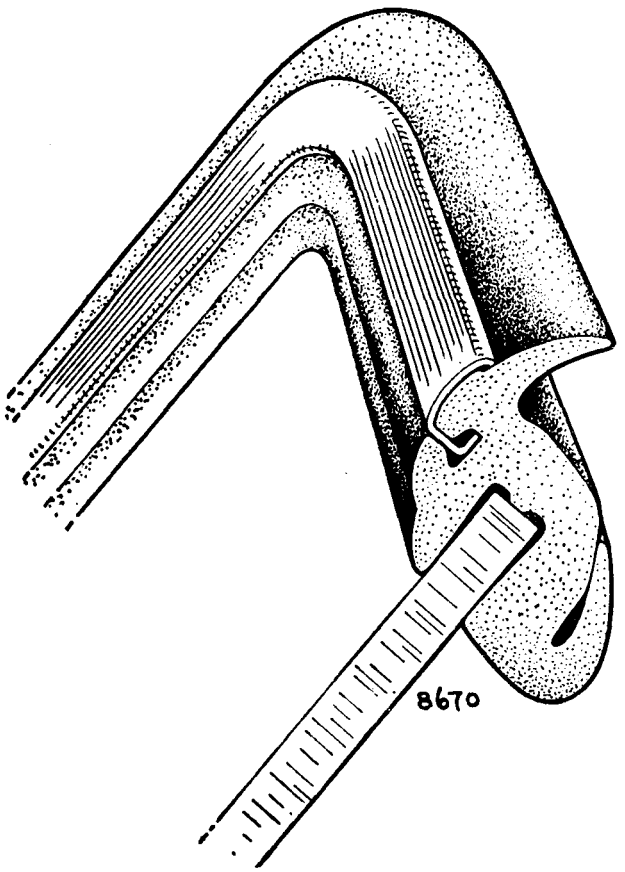

Fig. R.26

The section shows the outside finisher strip positioned in the seal and the seal pressed onto the glass

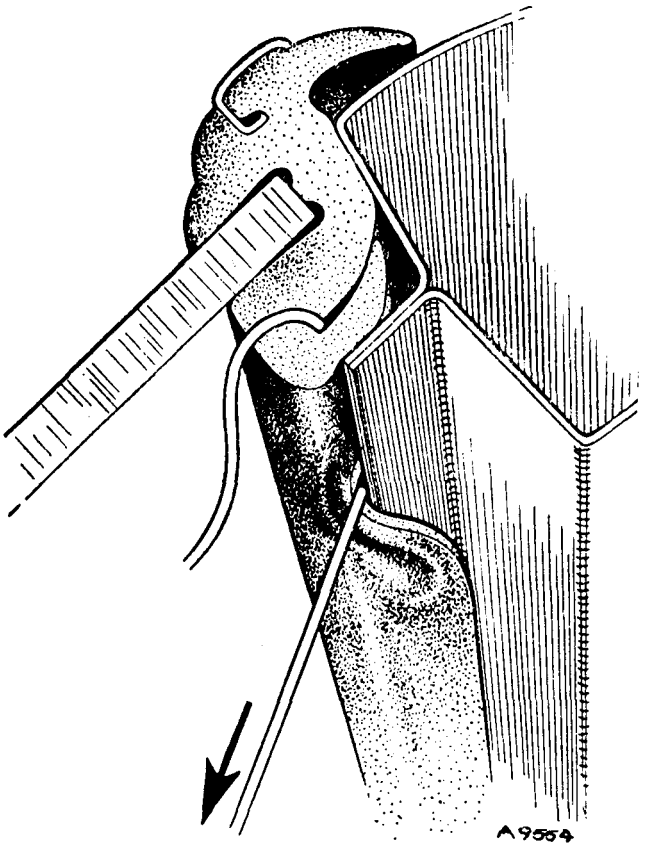

Fig. R.27

The method of pulling out the cord to draw the lip of the seal over the body flange

the aperture to draw the inside lip of the rubber channel over the flange as shown in Fig. R.27.

Use a rubber mallet round the outside edge of the windscreen to ensure complete seating of the assembly.

Seelastik sealing compound should be injected between the outer lip of the rubber seal and the body and between the seal and the glass, using an Expandite pressure applicator gun if possible fitted with a special $\frac{3}{16}$ in. (4·8 mm.) bore brass tube nozzle. The application must be evenly distributed round the windscreen. To ensure this the outside lip should be firmly pressed down with the fingers or a wooden roller to spread the sealing compound under the rubber seal.

Refit the driving-mirror.

Section R.24

REPAIR PROCEDURE

Body jack

The specially designed body jack, obtainable under 18G 308, is an absolutely essential item when rectifying any misalignment of the body construction. The jack is

provided with a ratchet turnscrew, and the pitch of the centre spindle thread is such that considerable force (either pulling or pushing) can be exerted. The extension pieces are made from solid drawn steel tubes and their lengths are such that the effective length of the jack can be made to vary between 21 and 94 in. (533 and 2388 mm.).

The body jack is supplied by the Service division at current prices. A metal box in which the jack and its components can be neatly stored is supplied with the jack.

When using the jack care must be taken to use it in the correct positions to rectify the fault or misalignment. Reference should be made to pages R.15 and R.16 for details of the necessary alignment checks.

Figs. R.30 to R.33 inclusive illustrate some of the uses of the body jack.

Considerable thought has been given to their construction and design, and careful study of the equipment will be amply repaid.

With the addition of a suitable oxy-acetylene outfit (Section R.26) any type of mono-construction repair can be effected. The initial outlay need only be small, and, considering the wide range of operations covered, there should be no hesitation in deciding that the kit must figure as part of the equipment of your repair shop.

Rectification of buckled panels or underframe

The illustrations on this page will demonstrate a few of the typical applications to which the body jack can be applied. Experience will prove that parts of the body which at first sight would be considered beyond repair can be rectified easily by straightening.

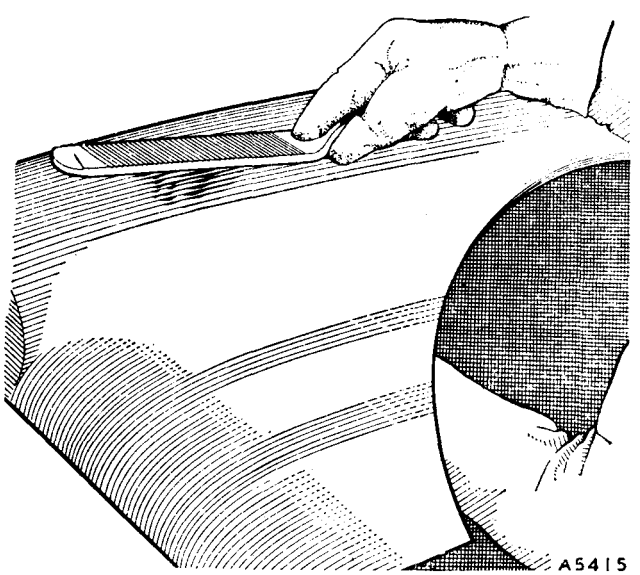

Fig. R.28

Removing a dent by tapping with a spoon; a dolly is held below the dent

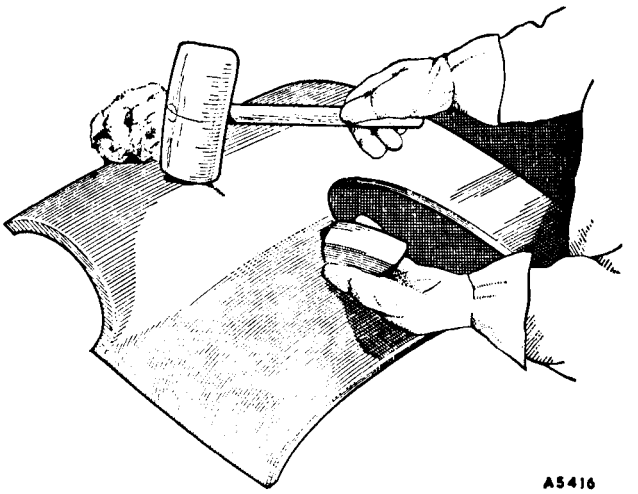

Fig. R.29

Dolly block and mallet

It is of paramount importance to return the damaged portion of the body to its original position before deciding whether replacement panels are necessary or not.

With the use of the special jack this method enables a buckled or damaged structure to be returned to its original relative position without straining the surrounding metal, which would be the inevitable result if the damaged portion were pounded by means of a hammer. At this stage a decision can be reached as to whether any damaged panel is to be repaired or renewed.

Spoon for removal of small dents

To remove small dents a spoon which is made from a coarse-cut file, specially shaped and having the teeth intact, is used in conjunction with a suitably shaped dolly block (Fig. R.28).

The use of a hammer to remove small dents is to be deprecated, as hammer blows tend to stretch the surrounding metal, giving rise to further complications. It is for this reason that the spoon is recommended, as by its use a depression can be raised to its original level without stretching.

On panel work such as doors, or where inside reinforcements prevent the use of a dolly block, a hole can be punched or drilled through the inside panel and a suitable drift pin, about ½ in. (13 mm.) in diameter, used in conjunction with the spoon in place of the dolly block.

Sharper dents or a dent or collection of dents covering a large area will require the use of heat, a dolly, and a spoon in the following manner.

With the welding torch heat a small area at the outside of the collection of dents (Fig. R.34), then, holding the dolly below, hammer the raised portion with a wooden

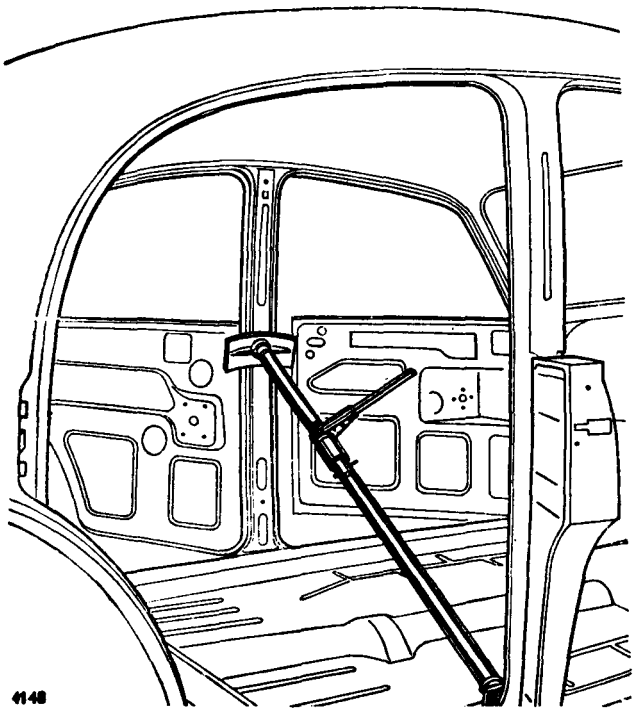

Fig. R.30

A bent door pillar can be restored by applying pressure from the jack in the position illustrated. The doors are left suspended on their hinges to act as templates during the operation

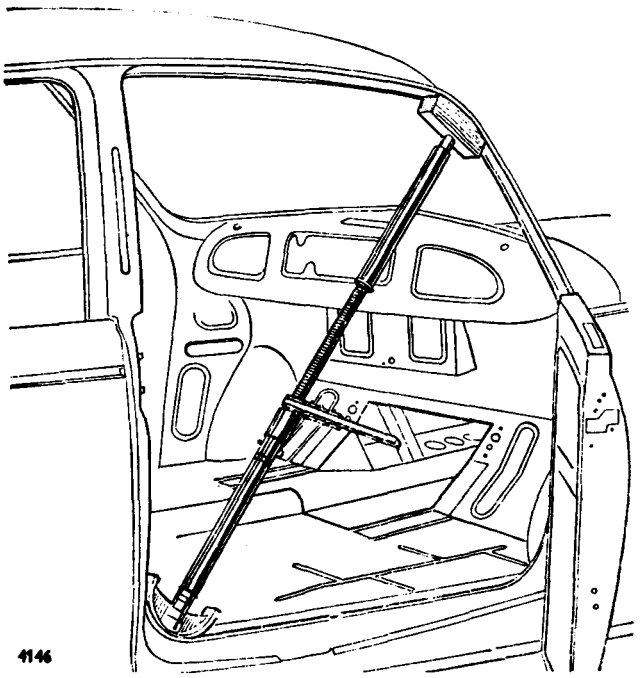

Fig. R.31

This illustration demonstrates the jack being used to rectify a 'lozenged' door opening. Pressure is applied until the clearance round all sides of the door is equal and it opens and closes freely

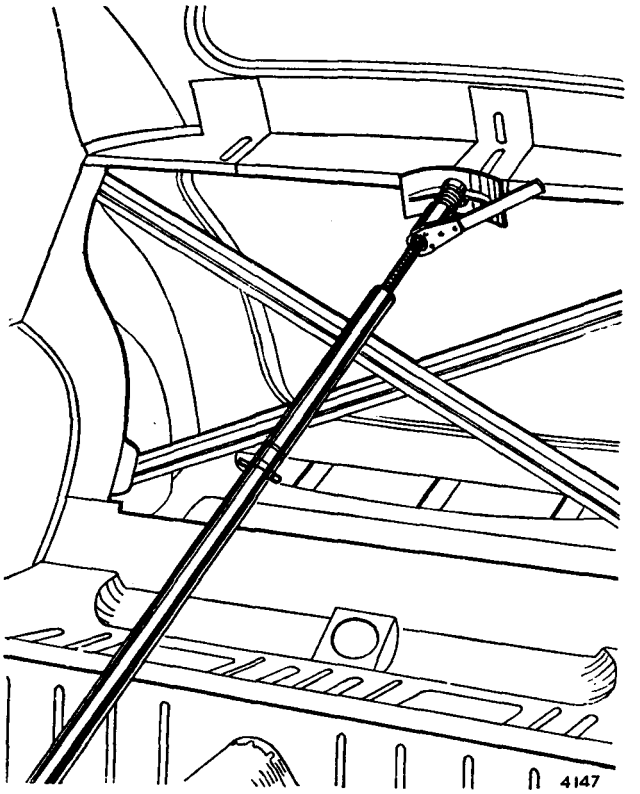

Fig. R.32

Where the rear end of a car becomes 'pushed in' as the result of an accident the panels can be returned in the manner illustrated. The unexposed end of the jack is located against a wooden batten placed across the door pillars. The trunk lid, when repaired or replaced, is fitted in position and is used as a template. Where one is not available for the rear light opening the glass can be used for this purpose

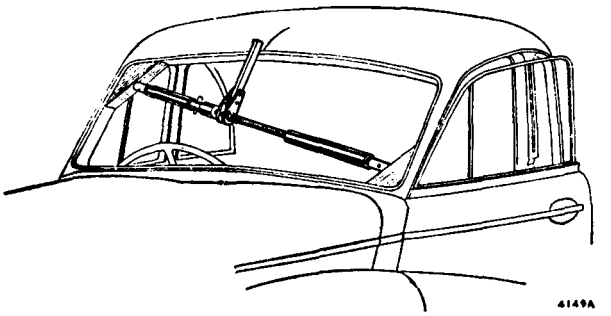

Fig. R.33

A 'lozenged' windscreen opening can be restored to its original shape by placing the body jack diagonally across the narrow corners. Where the standard end pads do not suit the contour of a particular part of the body suitable ends can be shaped from hardwood blocks. The windscreen glasses can be used as a template, although it will be found most useful if steel or plywood templates are available beforehand for such openings as the windscreen, rear light, etc.

mallet. When the metal cools remove the dolly and place a large handful of wet asbestos over the heated area (Fig. R.35) to prevent the heat spreading. Continue to heat and tap, working from the outside of the damaged area, until something like the original contour and level are attained.

Lightly file the surface to show up the high-spots and remove these with the dolly and spoon without further heating.

Take care when using the file not to thin the metal more than is necessary to show up the high-spots.

Alternate checking by filing and raising with the dolly block and spoon will eventually produce a flat and clean surface without weakening the metal unduly, provided excessive filing is avoided. Care should be exercised to reduce filing to a minimum as otherwise the thickness of the panel will be seriously reduced.

On completion, the surface may be tinned and any small indentations filled with plumber's solder.

Preservation of paintwork

A special spoon, having the teeth removed and its surface planished and polished, is required to enable small dents to be removed without damage to paintwork. Where it is possible to preserve paintwork when rectifying comparatively large dents a sandbag should be placed against the painted surface of the panel and the dent removed from the under side by the use of a wooden mallet. A suitable sandbag for this operation may be made from a leather oval bag 8 in. (203 mm.) long, 6 in. (152 mm.) wide, and 4 in. (102 mm.) thick which is packed tightly with sand.

Stretched panels

Stretched panels which are liable to cause drumming can be rectified by local shrinking. A liberal heap of wet asbestos is placed over the stretched panel at the point of greatest resiliency, and a hole just large enough to apply the flame of the oxy-acetylene torch is made with a finger through the centre of the asbestos. The portion of the panel which is visible is heated to a cherry-red colour and is afterwards cooled off by the wet asbestos which surrounds it. For large panels it may be necessary to repeat this operation several times at different locations over the area.

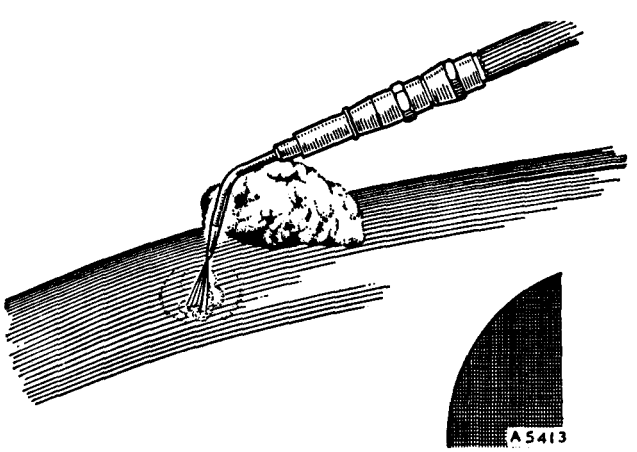

Fig. R.34

Application of heat to a stretched panel

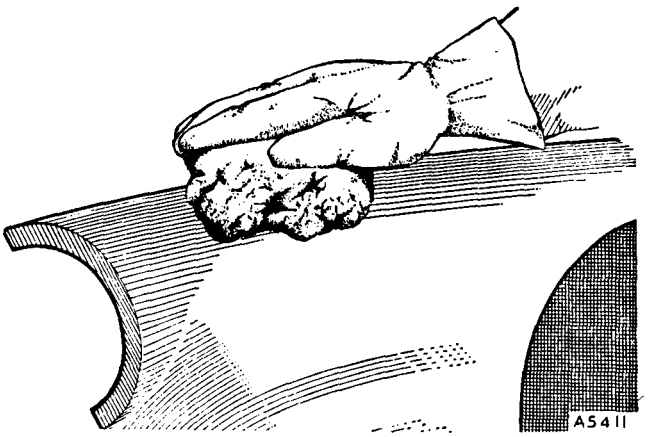

Fig. R.35

Cooling the damaged area with wet asbestos

Where a panel is stretched over a fairly extensive area and produces what is known as an 'oilcan' effect the following shrinking method should be used to restore the original contour.

Mix a quantity of wet asbestos sufficient to cover the damaged area with a thickness as shown in Fig. R.36. Press the asbestos down firmly to ensure that no air is trapped below, as it is important to confine the applied heat to the points of application.

With a finger pierce a series of holes in the asbestos extending to the surface of the metal. Direct the flame of the welding torch to one of the holes near the perimeter of the asbestos and heat the metal to cherry red, remove the torch, and immediately press the surrounding asbestos into the hole (Fig. R.37).

Carry out the same procedure with the remaining holes, working around the asbestos and inwards towards the centre. When the asbestos is removed the surface is cleaned up in the usual manner.

Patching

An extensively damaged panel can frequently be repaired quite satisfactorily and more economically by patching rather than by renewing the entire assembly. This type of repair does not in the least weaken the surrounding structure, as a patch which is correctly gas-welded in position is equal in strength to the original

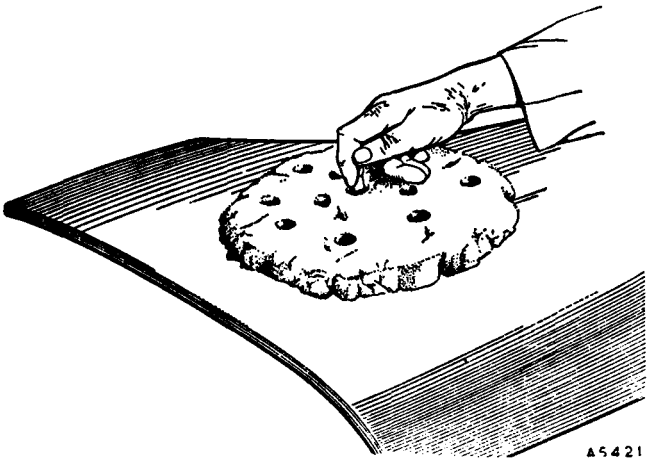

Fig. R.36
Piercing a series of holes in the wet asbestos

structure. A patch can be introduced so efficiently that it is impossible to trace its presence.

The damaged portion of the panel should be cut out with a cold chisel or, if possible, by means of a hacksaw. The edges of the opening should then be filed until an even contour is obtained (Fig. R.38).

The patch to be fitted should preferably be cut from sheet metal of similar gauge and specification to that being repaired. First, it is rough-shaped to the contour of the panel, after which it is fitted to the opening to allow a clearance on all sides equal to the gauge of the metal.

In all probability, particularly during welding operations, difficulty will be experienced in holding the patch in place. This can be overcome satisfactorily by welding one or two short pieces of welding wire to act as convenient handles.

The patch is now fastened at intervals of 2 to 3 in. (51 to 76 mm.) to the panel by means of gas-weld tacks (Fig. R.39). During the tacking operation it should be reshaped to the panel to ensure that the contour is correct.

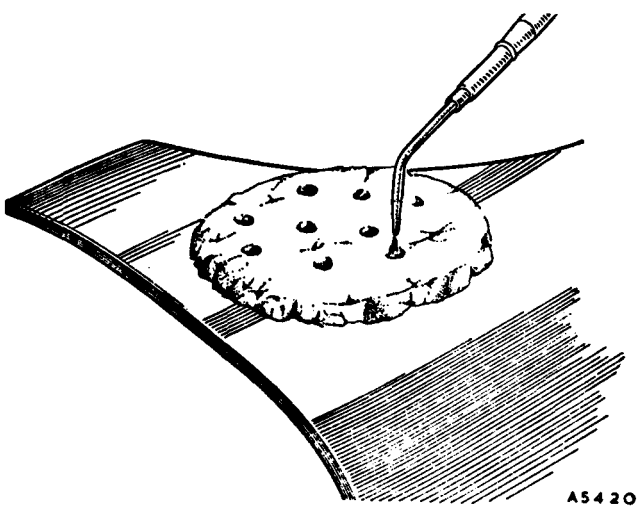

Fig. R.37
Applying heat to the stretched panel through holes in the wet asbestos

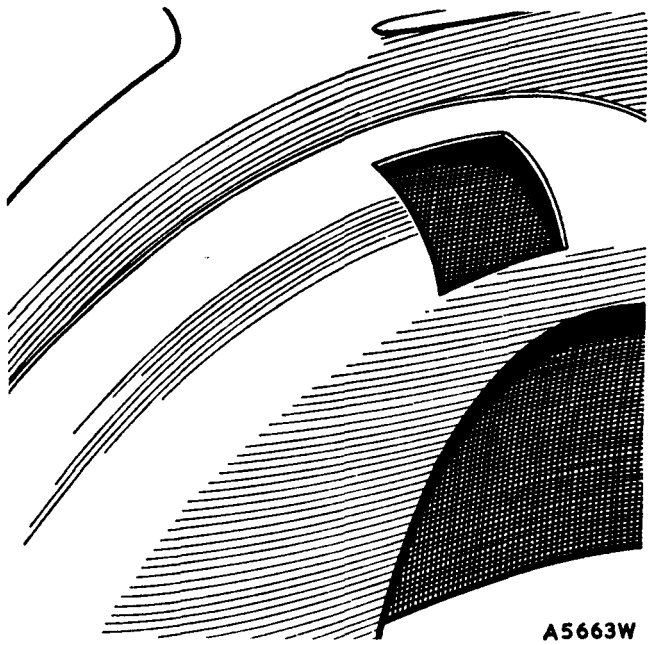

Fig. R.38
Damaged patch removed and hole ready for new patch

To prevent expansion and possible buckling of the surrounding panel during the welding operation a liberal quantity of wet asbestos must be placed on the panel round the patch, approximately ¼ in. (6 mm.) away from the joint (Fig. R.40). The joint is now gas-welded between the tacks, whilst precautions are taken to keep the patch to the correct contour by using a suitable dolly block and bumping hammer. On completion, any excrescences in the welding are removed by filing and, after straightening with the dolly block and bumping hammer, the patching is finally finished by tinning and solder-filling as described on pages R.27 and R.28.

Patch forming

Where it is necessary to 'form' a patch from the flat sheet to any particular contour a wooden or lead raising block is generally employed. The raising block should have several elliptical depressions of varying depths and diameters.

The patch is placed over the selected depression and is raised by hammering with the ball-peen end of a hammer, starting from the outer edges and gradually working towards the centre. A mistake frequently made is to strike too hard whilst raising the centre, with the result that the curve is of greater depth than that required.

Repair of beadings and mouldings

Where difficulty is experienced in straightening or renewing a beading, moulding, or corner the original contour may be obtained by careful tinning and filling with plumber's solder. The finished work will be equal in appearance and equal in strength, whilst the substitution of soldering for straightening, or renewing, will save the necessity for removing inside trimmings, etc.

Filing

It should be understood clearly that in every case filing must be reduced to a minimum owing to the thinness of the material. Wrinkles or ridges should be removed by the spoon or dolly block, as explained on page R.19, and finished finally by tinning and solder-filling.

Replacing panels

In cases of extreme damage it will be found more economical to remove the damaged portions and replace

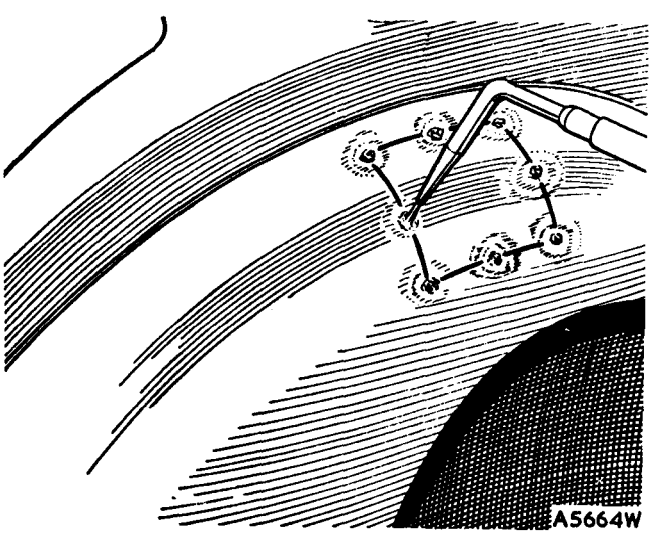

Fig. R.39
Patch fastened with gas-weld tacks prior to finish-welding

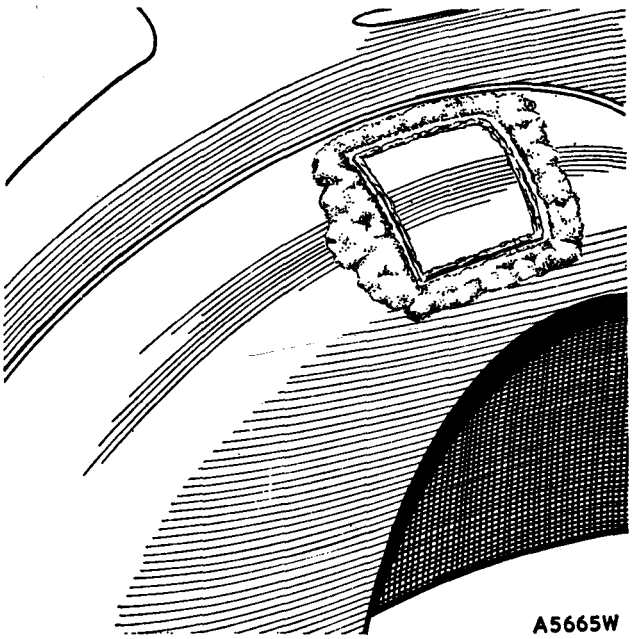

Fig. R.40
Wet asbestos on surrounding metal while welding in patch to prevent buckling

them with new panels, which are obtainable from Service division. The panels and assemblies which are available are illustrated on pages R.10 and R.12 and the part numbers are given in the current Service Parts List.

The illustrations on pages R.30 to R.47 inclusive show clearly the location and types of joints used in the construction of the body, and, following the instructions already given and the instructions to follow on welding, any portion of the body can be removed, either by a hacksaw or cold chisel, and a suitable replacement fitted in position.

Owing to the fact that damage is usually localized, it will only infrequently be found necessary to remove a complete panel or unit. In the great majority of cases the damaged portion can be removed and a corresponding part cut from a replacement unit and located in position by gas-welding.

Section R.25

WELDING METHODS

Spot-welds

This form of welding is used extensively throughout the assembly of the mono-construction body.

The units to be joined are pressed together between two copper electrodes through which an electric current of low voltage and high amperage is passed. The resistance of the steel to the electric current raises the metal

to welding temperature and the pressure between the electrodes produces complete fusion. The resulting joint is as strong as the surrounding structure, and a correctly made spot-weld will not break or become loose by vibration.

Spot-welds cannot be broken satisfactorily by inserting a cold chisel or lever between the two panels. Each weld must be carefully drilled in the centre, using a drill approximately $\frac{3}{16}$ in. in diameter. There is no necessity to drill through both panels as it is sufficient if the point of the drill merely penetrates the second panel. The weld is finally broken by inserting a thin, sharp, cold chisel between the joint and tapping it lightly with a hammer.

On panels where the spot-welds are covered by paint it is necessary to use a suitable paint remover to clean the paint from the joints. The spot-welds will easily be located by the discoloration of the metal. Reference to the body build-up illustrations will facilitate tracing the various joints.

Gas-welds

A gas-weld may be broken either by cutting with a hacksaw or, alternatively, with a sharp cold chisel. Place a suitable support at the back of the panel to act as an anvil whenever possible.

Lap-welds

Most lap-welds used in the mono-construction body are hidden from view by solder-filling. Reference should be made to the illustrations showing the build-up of the body in order to obtain the location of the various lap joints. This will enable the operator to direct the flame of the oxy-acetylene blowpipe onto the joint so that the solder filling can be melted and removed by the use of a duster. A lap-weld is broken by drilling out the spot-welds as previously explained.

Butt-welds

A butt-weld can be broken by the use of a hammer and chisel, the blows being directed against the panel which is to be renewed. If this method does not quickly break the weld, heat applied from the oxy-acetylene torch will soften the fused edges, thus assisting the operation. Alternatively, the joint may be cut by a hacksaw.

Remaking welds

The special section of this Manual devoted to welding should be studied carefully before any attempt is made to re-weld a joint on the body by an operator who has not had the necessary experience in this class of work.

When a joint is remade it is necessary, prior to painting, to clean the surface of the weld. During this operation, as previously mentioned, care should be taken to see that the structure is not unnecessarily weakened by excessive grinding or filing. It is preferable to hammer the joint so that it lies slightly lower than the surrounding metal and to flow solder into the depression. No amount of filing on the surface of the solder can reduce the strength of the joint below. (See Section R.27.)

When placing a new panel in position it should be joined where possible by gas-welding through the holes drilled in breaking the original spot-welds. During the welding operations a liberal heap of wet asbestos should be placed over the surrounding panels to prevent buckling and distortion due to heat.

Section R.26

WELDING TECHNIQUE

The following applies to equipment supplied by the British Oxygen Co. Ltd., although it also applies, in the main, to other similar equipment.

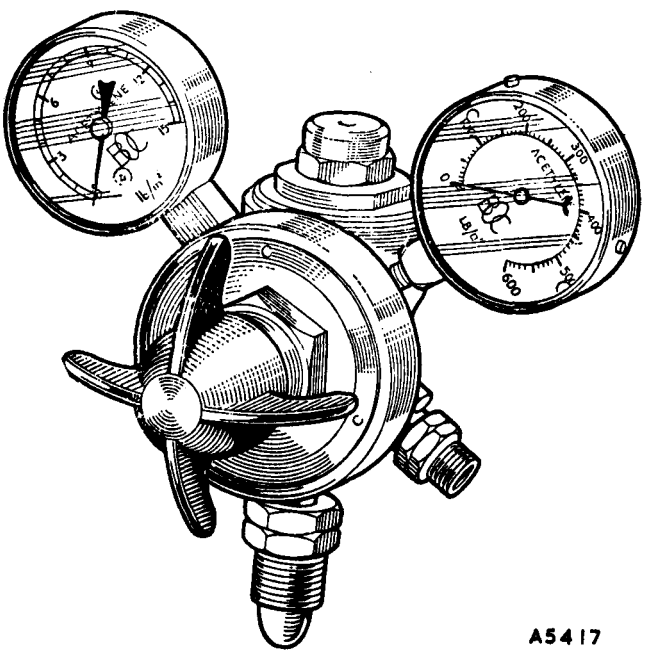

Fig. R.41

Type B.A.R.9 two-stage acetylene regulator

Welding equipment

High-pressure oxy-acetylene welding equipment using dissolved acetylene is recommended. This consists of:

(1) Supply of acetylene in cylinders.
(2) Supply of oxygen in cylinders.
(3) Blowpipe with necessary nozzles.
(4) Acetylene pressure regulator.
(5) Oxygen pressure regulator.
(6) Two lengths of rubber-canvas hose.
(7) Set of spanners and spindle key.

WELDING

HIGH-PRESSURE BLOWPIPES

Nozzle Sizes, Working Pressures, and Gas Consumptions for Various Metal Thicknesses

M.S. plate thickness (in.)	*Nozzle size*	*Regulator pressures (lb./sq. in.), oxygen and acetylene Saffire equipment*	*Appropriate consumption of each gas (cu. ft./hr.)*
$\frac{1}{32}$	1	2	1
$\frac{3}{64}$	2	2	2
$\frac{1}{16}$	3	2	3
$\frac{3}{32}$	5	2	5
$\frac{1}{8}$	7	2	7
$\frac{5}{32}$	10	3	10
$\frac{3}{16}$	13	3	13
$\frac{1}{4}$	18	3	18
$\frac{5}{16}$	25	4	25

(8) Welding goggles and spark lighter.
(9) Welding rods.
(10) Welding fluxes.
(11) Trolley for accommodating complete equipment and cylinders.

Assembly

(1) Stand both cylinders vertically on the ground or on a trolley. Oxygen cylinders are painted BLACK. Acetylene cylinders are painted MAROON. Never attempt to interfere with the colour of cylinders or to repaint them.

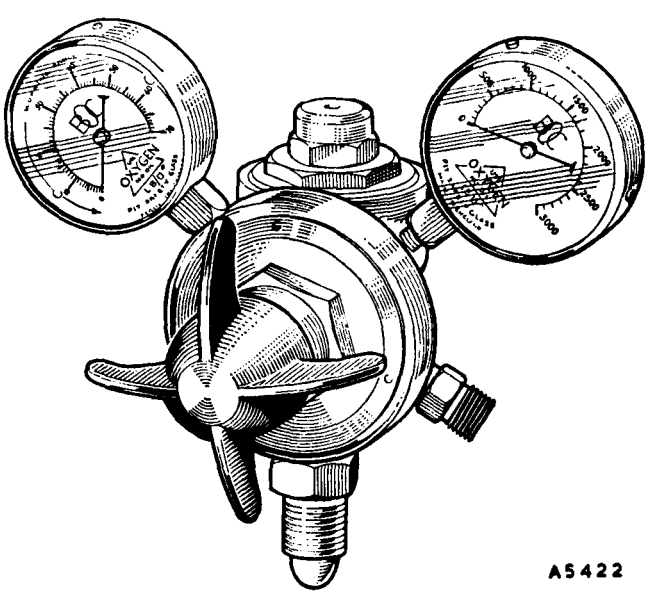

Fig. R.42
B.O.R.12A two-stage oxygen regulator

(2) See that jointing surfaces in cylinder valves and regulators are free from oil or grease.
(3) Open the valve on the oxygen cylinder momentarily in order to dislodge dirt or obstruction in the cylinder valve, then close.
(4) Screw the oxygen regulator (painted BLACK) into the oxygen cylinder valve. The oxygen cylinder valve outlet and oxygen regulator connection have **right-hand** screw threads.
(5) Screw the acetylene regulator (painted MAROON) into the acetylene cylinder valve. The acetylene cylinder valve outlet and acetylene regulator connection have **left-hand** screw threads.
(6) Tighten the regulator in the cylinder valve. Do not use excessive force, but make certain that the joints are gas-tight.
(7) Connect the hose (acetylene RED, oxygen BLACK) to the screwed outlets of the regulators by means of the screwed connections secured in the ends of the hose. Blow the hose through before attaching to the regulator or blow-pipe in order to remove dust or dirt and to remove chalk when the hose is new.
(8) Connect the other end of the hose, that fitted with a hose protector, to the blowpipe—the acetylene hose to the connection marked 'A', the oxygen to the connection marked 'O'. Keep the blowpipe control valves closed. (A high- or low-pressure

blowpipe can be used with the dissolved acetylene. If a low-pressure blowpipe is used the acetylene pressure should never exceed 2 lb./sq. in. [·14 kg./cm.²].)

(9) Fix the appropriate nozzle to the blowpipe. (See the table.)

(10) Open the cylinder valves very slowly by means of the cylinder key. Do not open suddenly, or there may be serious damage to the regulator and the possibility of an accident. Open the cylinder valve spindle one turn only.

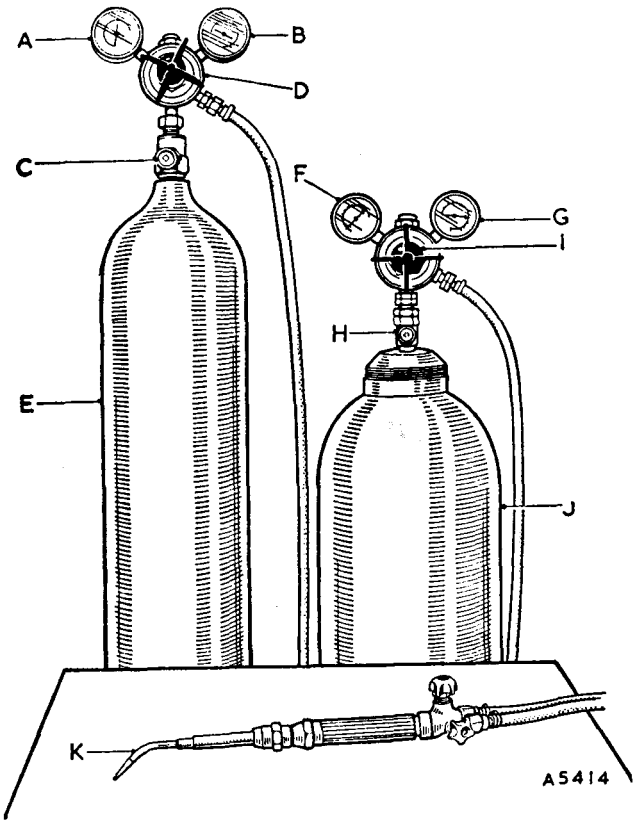

Fig. R.43

High-pressure oxy-acetylene welding outfit

A. Outlet pressure gauge (O).
B. Cylinder contents gauge (O).
C. Valve (oxygen).
D. Pressure regulating screw.
E. Oxygen cylinder (BLACK).
F. Outlet pressure gauge (A).
G. Cylinder contents gauge (A).
H. Valve (acetylene).
I. Pressure regulating screw.
J. Acetylene cylinder (MAROON).
K. Blowpipe (interchangeable nozzle).

(11) Set the regulators at the correct working pressures. (See the table.)

(12) Open the acetylene control valve on the blowpipe, wait a few seconds until air is blown out and pure acetylene is coming from the blowpipe nozzle, then light, preferably by means of a spark lighter, Type S.L.1.

(13) Reduce or increase the acetylene supply by the blowpipe valve until the flame just ceases to smoke.

(14) Turn on the oxygen by the blowpipe control valve until the white inner cone in the flame is sharply defined, with the merest trace of an acetylene haze.

The blowpipe is now adjusted for welding steel, and work may be commenced.

The size of nozzle given for a particular thickness of steel is for general guidance only and will vary according to the skill of the welder, mass of metal, etc. The capacity of each nozzle overlaps the capacities of those next in size to it. The values given are for downhand butt-welds in mild steel. For other techniques nozzle size and pressure may have to be varied slightly, e.g. for copper select a larger nozzle, for aluminium a smaller nozzle.

On thin-gauge steel up to and including $\frac{1}{16}$ in. thickness tacks should be slightly closer together—say, 1 to $1\frac{1}{2}$ in. (25 to 38 mm.) apart—to keep the edges in alignment and minimize distortion.

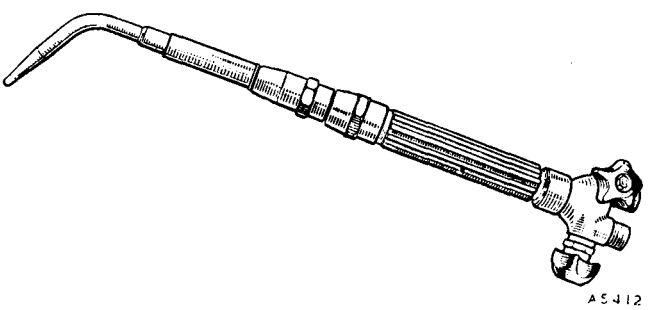

Fig. R.44

Welding blowpipe

For the same reason patches should, wherever possible, be oval or circular. Before welding, these should be slightly 'dished' below the level of the surface to be patched, since welding—even by the correct 'sequence'—will cause them to expand and rise.

Do not light the blowpipe until everything else has been prepared for welding in accordance with the instructions given above. On completion of the job proceed as follows:

(1) Turn off the **acetylene** first by the blowpipe control valve, and then the oxygen.

(2) Close the cylinder valves.

(3) Open the blowpipe valves one at a time to release the pressure in the hose—open the oxygen valve and shut it, open the acetylene valve and shut it.

(4) Unscrew the pressure regulating screws on the oxygen and acetylene regulators.

(5) In the case of **backfire** turn off the **oxygen** first.

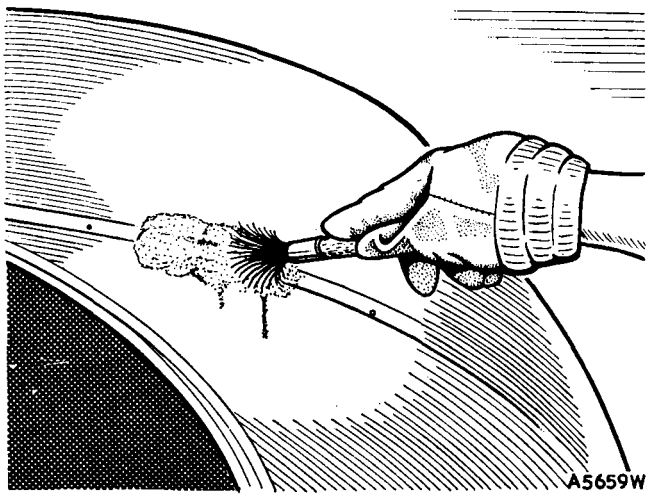

Fig. R.45
Applying flux to the joint

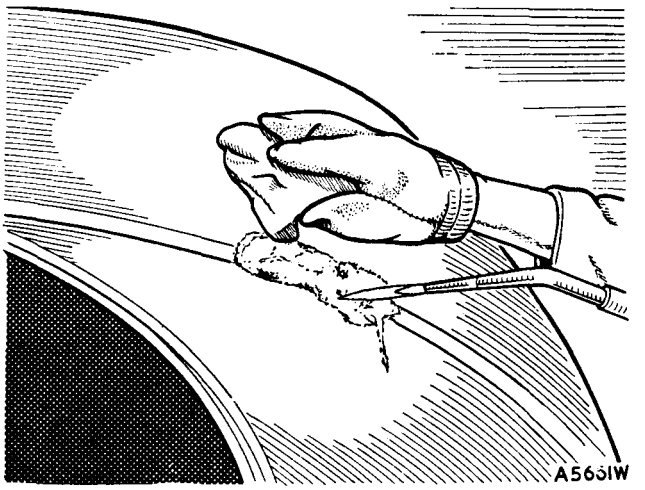

Fig. R.47
Wiping the joint with hemp

Section R.27

TORCH-SOLDERING

Torch-soldering is the method employed to obtain the desired contour of a panel without weakening the structure and with the minimum amount of straightening, filing, and polishing.

The solder used is an alloy of lead and tin. Lead melts at a temperature of 621° F. (327° C.) and tin at 450° F. (232° C.). Alloys of the two metals change from a solid to a liquid state over this range of temperature within which they are in a plastic condition. The alloys used for torch-soldering are known as tinman's solder (which contains 60 per cent. lead and 40 per cent. tin) and plumber's solder (which contains 70 per cent. lead and 30 per cent. tin). Tinman's solder, as a result of its higher tin content, alloys more readily with the surface of the sheet steel and is applied as a 'base' to which the plumber's solder adheres firmly. Plumber's solder remains plastic over a wide range of temperature (from 509 to 358° F. [265 to 181° C.]), and within this range can be moulded to any desired shape. For this reason it is used to obtain the required contours.

Where it is desired to build up a contour with solder the surface of the steel must first of all be cleaned thoroughly. Rust, scale, welding oxide, or any other impurity must be removed by means of a wire brush, file, and emery-cloth. A polishing-wheel, if available, is useful for this operation.

The surface of the metal is heated gently with a blowpipe or gas-torch, and soldering flux applied with a brush (see Fig. R.45).

The flux will melt and act upon the heated surface so that when tinman's solder is applied and rubbed with a

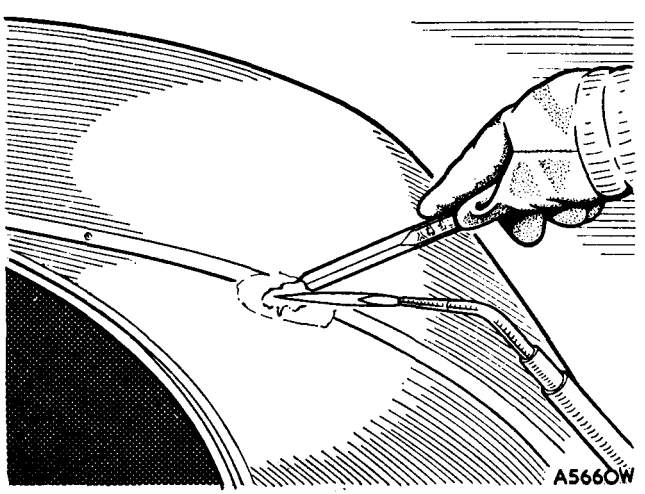

Fig. R.46
Tinning the joint

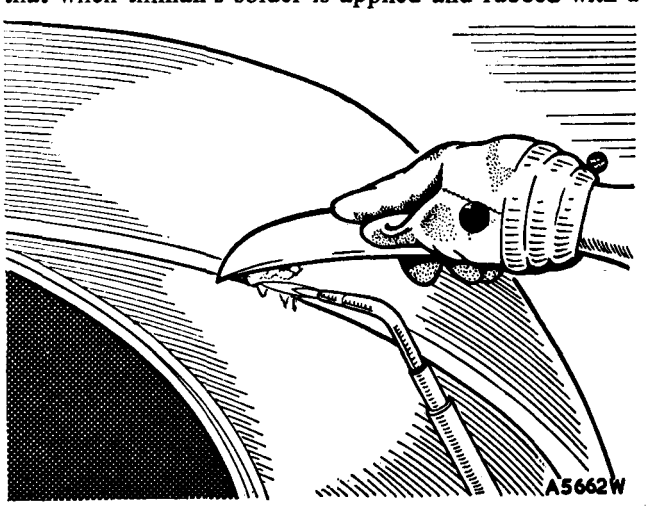

Fig. R.48
Applying the solder

wad of hemp the metal will become evenly coated with a thin layer of solder, or 'tinned' (Fig. R.47). The secret of successful torch-soldering lies in the thoroughness with which the tinning operation is carried out as it is the foundation on which the plumber's solder is to be built up.

A second application of flux should be made and gently heated by means of the torch. When wiped by the wad of hemp the entire surface of the metal should have a spotlessly clean and bright appearance.

Plumber's solder is now melted onto the surface (Fig. R.48) and maintained by careful use of the torch in the plastic condition whilst it is moulded to the desired contour with a hardwood paddle coated with palm oil (Fig. R.48). During the moulding operation frequent immersion of the paddle in palm oil assists in the manipulation of the solder. If palm oil is not available boiled linseed, lard, or machine oil will be found satisfactory.

The final contour is obtained by filing or, if available, by the use of a polishing-wheel. If the work is carefully carried out it should be impossible to trace the presence of the filling.

NOTE

For information on checking body alignment before and after repair refer to Sections R.28, R.29, R.30, R.31, and R.32 on pages R.48 to R.51.

The following index shows the breakdown of body and underframe panels on all models:

THE COMPONENTS OF THE UNDERFRAME (Series MM)

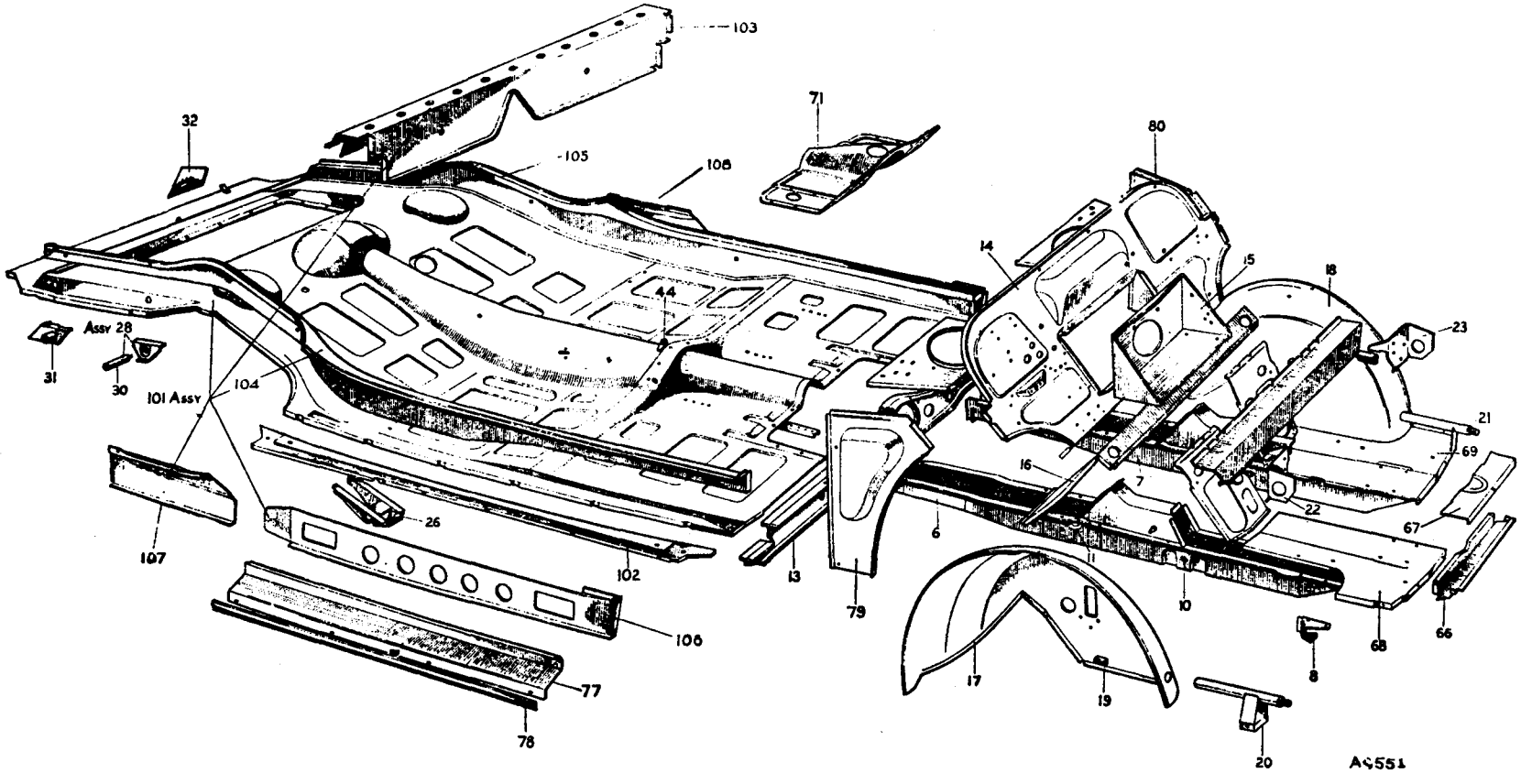

KEY TO THE COMPONENTS OF THE UNDERFRAME (Series MM)

No.	*Description*
6.	Longitudinal member assembly—R.H.
7.	Longitudinal member assembly—L.H.
8.	Bracket assembly—R.H.—tie-bar.
10.	Distance tube and reinforcement assembly.
11.	Boss—pedal bearing.
13.	Centre cross-member assembly.
14.	Dash panel.
15.	Battery box assembly.
16.	Toeboard panel.
17.	Wheel arch panel—R.H.—front.
18.	Wheel arch panel—L.H.—front.
19.	Bracket—brake hose.
20.	Bumper tube and stud assembly—R.H.
21.	Bumper tube and stud assembly—L.H.

No.	*Description*
22.	Stiffener bracket—R.H.—shock absorber.
23.	Stiffener bracket—L.H.—shock absorber.
26.	Bracket assembly—R.H.—rear spring front.
28.	Shock absorber pin and bracket assembly—R.H.
30.	Pin—shock absorber.
31.	Tube—inner shackle.
32.	Reinforcement—spare wheel clamp.
44.	Lug—hand brake rear mounting.
66.	Front cross-member assembly.
67.	Top plate—front cross-member.
68.	Tie-plate assembly—R.H.—wheel arch to longitudinal member.
69.	Tie-plate assembly—L.H.—wheel arch to longitudinal member.

No.	*Description*
71.	Cover assembly—gearbox.
77.	Panel—sill outer—R.H.
78.	Finisher panel—R.H.
79.	Panel—front side inner—R.H.
80.	Panel—front side inner—L.H.
101.	Floor assembly.
102.	Panel—R.H.—floor side extension.
103.	Cross-member assembly—rear seats support.
104.	Sill member—R.H.
105.	Sill member—L.H.
106.	Sill boxing plate—R.H.
107.	Boxing plate extension—R.H.
108.	Boxing plate extension—L.H.

THE COMPONENTS OF THE BODY (Series MM—2-door)

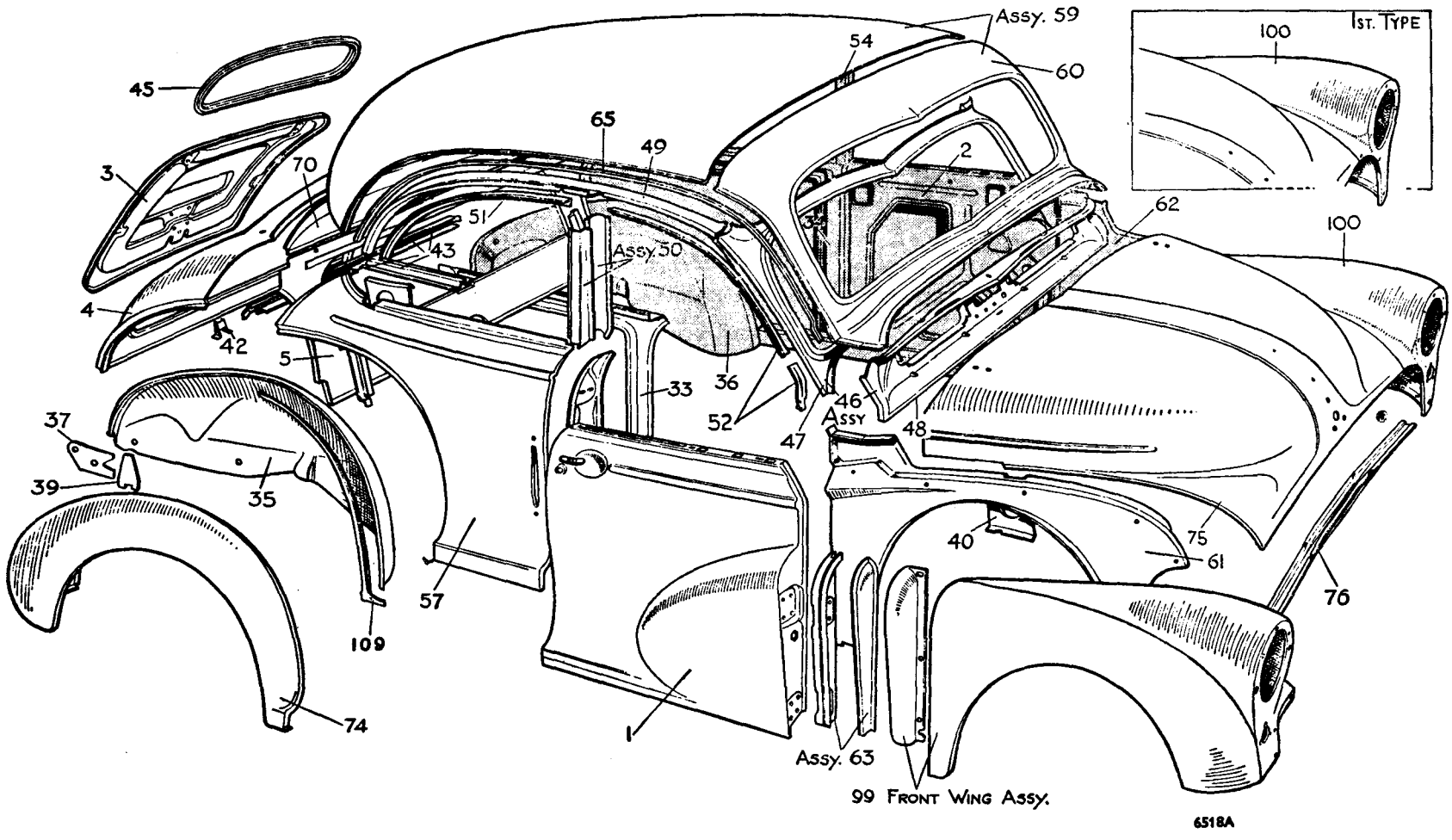

KEY TO THE COMPONENTS OF THE BODY (Series MM—2-door)

No.	*Description*
1.	Door assembly—R.H.
2.	Door assembly—L.H.
3.	Trunk lid assembly.
4.	Trunk panel assembly.
5.	Panel assembly—lower—rear squab support.
33.	Panel—R.H.—rear quarter inner.
34.	Panel—L.H.—rear quarter inner.
35.	Panel—R.H.—rear wheel arch.
36.	Panel—L.H.—rear wheel arch.
37.	Shackle plate and towing eye.
39.	Jack plate.
40.	Boxing plate—R.H.—front wheel arch to body side.
42.	Bracket—trunk opening to floor.
43.	Support member assembly—trunk floor.
45.	Reinforcement—back-light.
46.	Panel assembly—fascia.
47.	Top portion—fascia panel assembly.
48.	Lower portion—fascia panel assembly.
49.	Reinforcement—R.H.—roof side inner.
50.	Panel assembly—R.H.—shut pillar—upper.
51.	Panel—R.H.—quarter-light top facing.
52.	Panel—R.H.—door opening top facing.
54.	Panel assembly—L.H.—shut pillar—upper.
57.	Panel—R.H.—rear quarter.
59.	Panel assembly—roof and windscreen opening.
60.	Panel—windscreen opening.
61.	Panel—R.H.—body side—front.
62.	Panel—L.H.—body side—front.
63.	Extension assembly—R.H.—hinge pillar.
65.	Finisher—R.H.—drip moulding.
70.	Panel assembly—upper—rear squab support.
74.	Wing—R.H.—rear.
75.	Bonnet assembly.
76.	Cross-member assembly—bonnet.
99.	Wing—R.H.—front.
100.	Wing—L.H.—front.
109.	Connecting piece—rear wheel arch—R.H.

COMPONENTS OF THE BODY (Series MM—4-door)

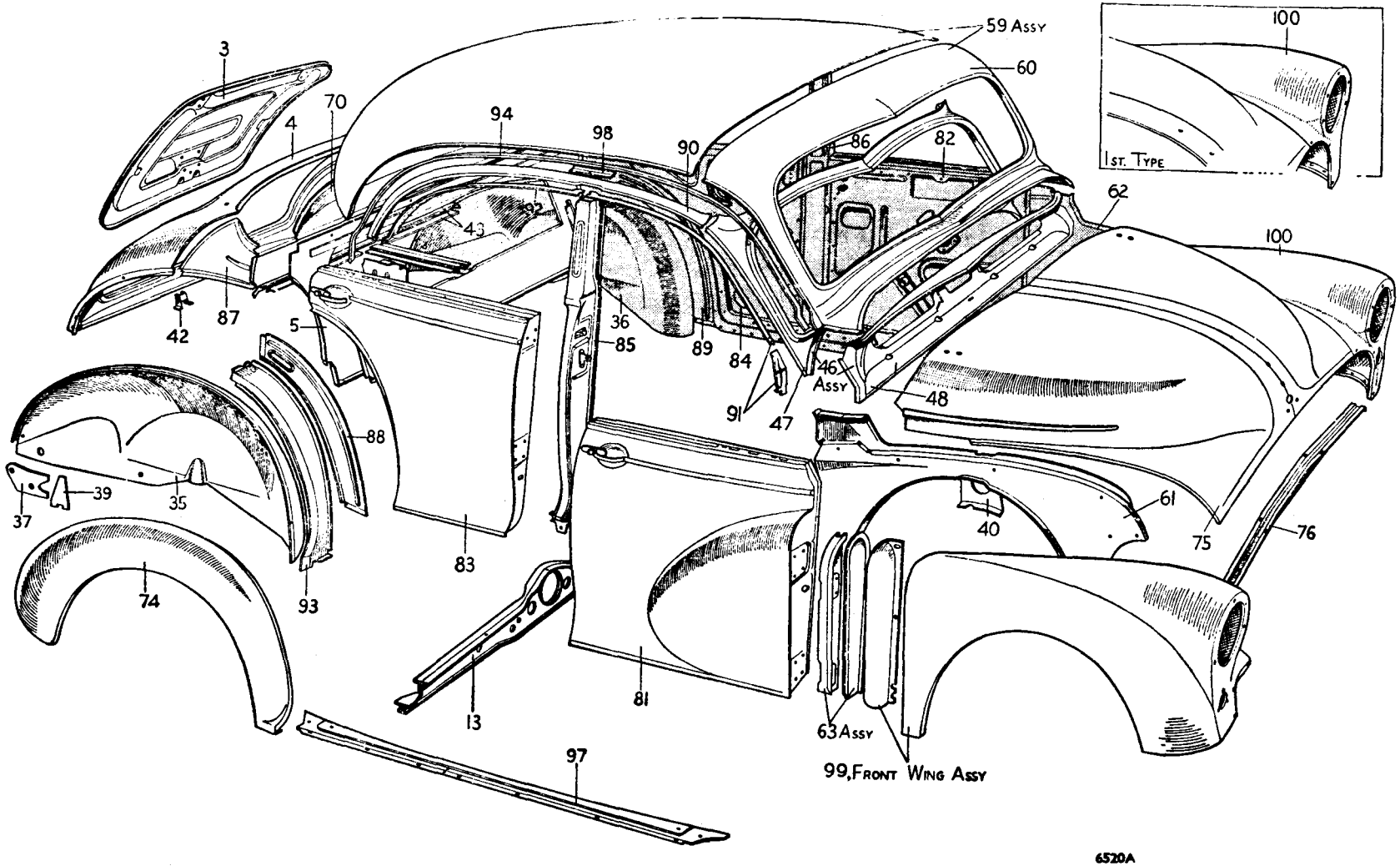

KEY TO THE COMPONENTS OF THE BODY (Series MM—4-door)

No.	*Description*
3.	Trunk lid assembly.
4.	Trunk panel assembly.
5.	Panel assembly—lower—rear squab support.
13.	Centre cross-member assembly.
35.	Panel—R.H.—rear wheel arch.
36.	Panel—L.H.—rear wheel arch.
37.	Shackle plate and towing eye.
39.	Jack plate.
40.	Boxing plate—R.H.—front wheel arch to body side.
42.	Bracket—trunk opening to floor.
43.	Support member assembly—trunk floor.
46.	Panel assembly—fascia.
47.	Top portion—fascia panel.
48.	Lower portion—fascia panel.
59.	Panel assembly—roof and windscreen opening.
60.	Panel—windscreen opening.
61.	Panel—R.H.—body side—front.
62.	Panel—L.H.—body side—front.
63.	Extension assembly—R.H.—hinge pillar.
70.	Panel assembly—upper—rear squab support.
74.	Wing—R.H.—rear.
75.	Bonnet assembly.
76.	Cross-member assembly—bonnet.
81.	Door assembly—R.H.—front.
82.	Door assembly—L.H.—front.
83.	Door assembly—R.H.—rear.
84.	Door assembly—L.H.—rear.
85.	Centre pillar assembly—R.H.—door.
86.	Centre pillar assembly—L.H.—door.
87.	Panel—R.H.—rear quarter.
88.	Panel—R.H.—rocker inner.
89.	Panel—L.H.—rocker inner.
90.	Reinforcement—R.H.—roof side inner.
91.	Panel—R.H.—front door opening top facing.
92.	Panel—R.H.—rear door opening top facing.
93.	Panel—R.H.—wheel arch rocker.
94.	Finisher—R.H.—drip moulding.
97.	Panel—R.H.—floor side extension.
98.	Reinforcement—door facing panels.
99.	Wing—R.H.—front.
100.	Wing—L.H.—front.

THE COMPONENTS OF THE UNDERFRAME (Series II, 1000, and Traveller)

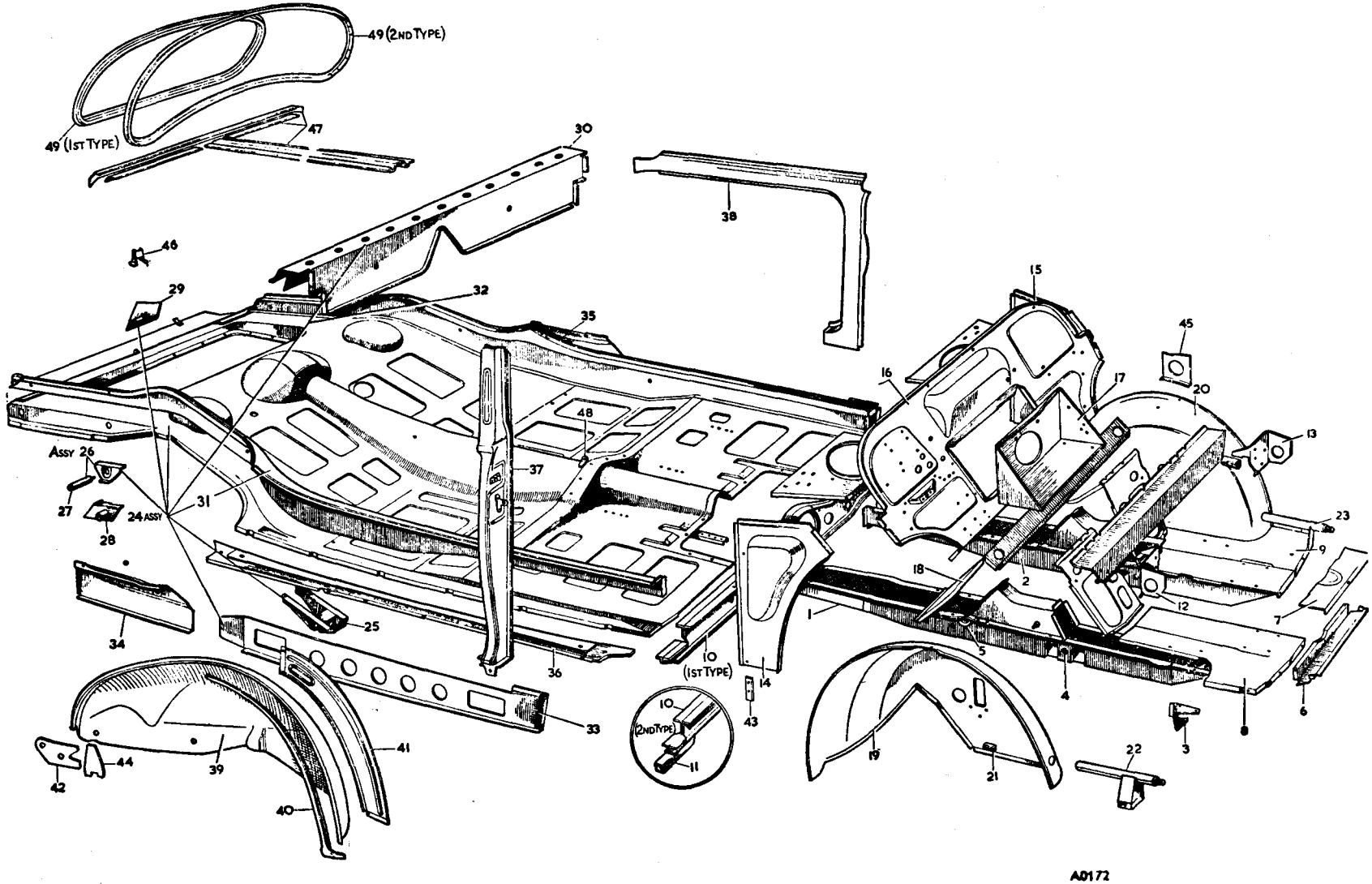

KEY TO THE COMPONENTS OF THE UNDERFRAME (Series II, 1000, and Traveller)

No.	*Description*
1.	Member assembly—longitudinal—R.H.
2.	Member assembly—longitudinal—L.H.
3.	Bracket assembly—tie-bar—R.H.
4.	Distance tube and reinforcement assembly.
5.	Boss—pedal bearing.
6.	Cross-member assembly—front.
7.	Top plate—front cross-member.
8.	Tie-plate assembly—wheel arch to longitudinal member—R.H.
9.	Tie-plate assembly—wheel arch to longitudinal member—L.H.
10.	Cross-member assembly—centre.
11.	Bracket—jacking.
12.	Stiffener bracket—absorber—R.H.
13.	Stiffener bracket—absorber—L.H.
14.	Panel—front side inner—R.H.
15.	Panel—front side inner—L.H.
16.	Panel—dash.
17.	Battery box assembly.
18.	Panel—toeboard.
19.	Panel—wheel arch—front R.H.
20.	Panel—wheel arch—front L.H.
21.	Bracket—brake hose.
22.	Bumper tube and stud assembly—R.H.
23.	Bumper tube and stud assembly—L.H.
24.	Floor assembly (2-door Saloon).
25.	Bracket assembly—rear spring front—R.H.
26.	Pin and bracket assembly—shock absorber—R.H.
27.	Pin—absorber link.
28.	Tube—inner shackle.
29.	Reinforcement—spare wheel clamp.
30.	Cross-member assembly—rear seat support.
31.	Sill member—R.H.
32.	Sill member—L.H.
33.	Boxing plate—sill—R.H.
34.	Extension—boxing plate—R.H. (2-door Saloon and Tourer).
35.	Extension—boxing plate—L.H. (2-door Saloon and Tourer).
36.	Panel—floor side extension—R.H.
37.	Pillar assembly—door centre—R.H.
38.	Panel—rear quarter inner—L.H. (2-door Saloon).
39.	Panel—rear wheel arch—R.H.
40.	Connecting piece—wheel arch—R.H. (2-door Saloon and Tourer).
41.	Panel—inner—rocker—R.H. (4-door Saloon).
42.	Plate—spring shackle and lifting eye.
43.	Plate—jack—front.
44.	Plate—jack—rear.
45.	Boxing plate—wheel arch front to body side—L.H.
46.	Bracket—trunk opening to floor.
47.	Support member assembly—trunk floor.
48.	Lug—hand brake rear mounting.
49.	Reinforcement—back-light.

THE COMPONENTS OF THE BODY (Series II and 1000)

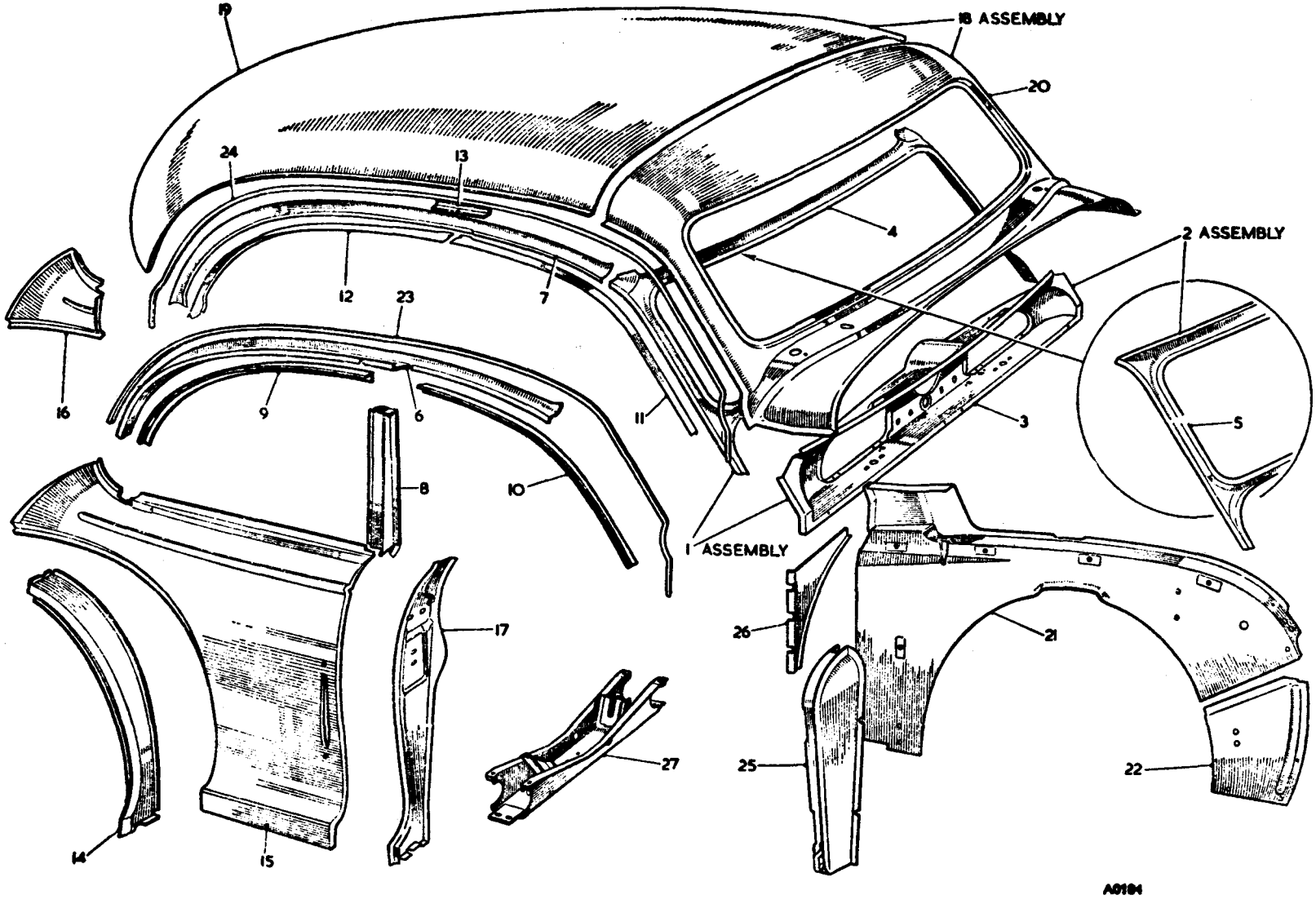

KEY TO THE COMPONENTS OF THE BODY (Series II and 1000)

No.	*Description*
1.	Panel assembly—fascia (Saloon and Traveller).
2.	Panel assembly—fascia (Tourer).
3.	Lower portion.
4.	Top portion (Saloon and Traveller).
5.	Top portion (Tourer).
6.	Reinforcement—roof side inner (2-door Saloon).
7.	Reinforcement—roof side inner (4-door Saloon).
8.	Panel assembly—shut pillar—upper R.H. (2-door Saloon).
9.	Panel—quarter-light top facing—R.H. (2-door Saloon).
10.	Panel—door opening top facing—R.H. (2-door Saloon).
11.	Panel—front door opening top facing—R.H. (4-door Saloon).
12.	Panel—rear door opening top facing—R.H. (4-door Saloon).
13.	Reinforcement—facing panels (4-door Saloon).
14.	Panel—wheel arch rocker—R.H. (4-door Saloon).
15.	Panel—rear quarter—R.H. (2-door Saloon and Tourer).
16.	Panel—rear quarter—R.H. (4-door Saloon).
17.	Pillar—door shut—R.H. (2-door Saloon and Tourer).
18.	Panel assembly—roof and windscreen (Saloons).
19.	Panel—roof (Saloons).
20.	Panel—windscreen (Saloons and Traveller).
21.	Panel—body side—front—R.H.
22.	Extension—body side panel—R.H.
23.	Finisher—drip moulding—R.H. (2-door Saloon).
24.	Finisher—drip moulding—R.H. (4-door Saloon).
25.	Extension assembly—hinge pillar—R.H.
26.	Reinforcement—fascia to side cover—R.H. Tourer).
27.	Cross-member assembly—rear engine.

THE COMPONENTS OF THE BODY (Series II and 1000)

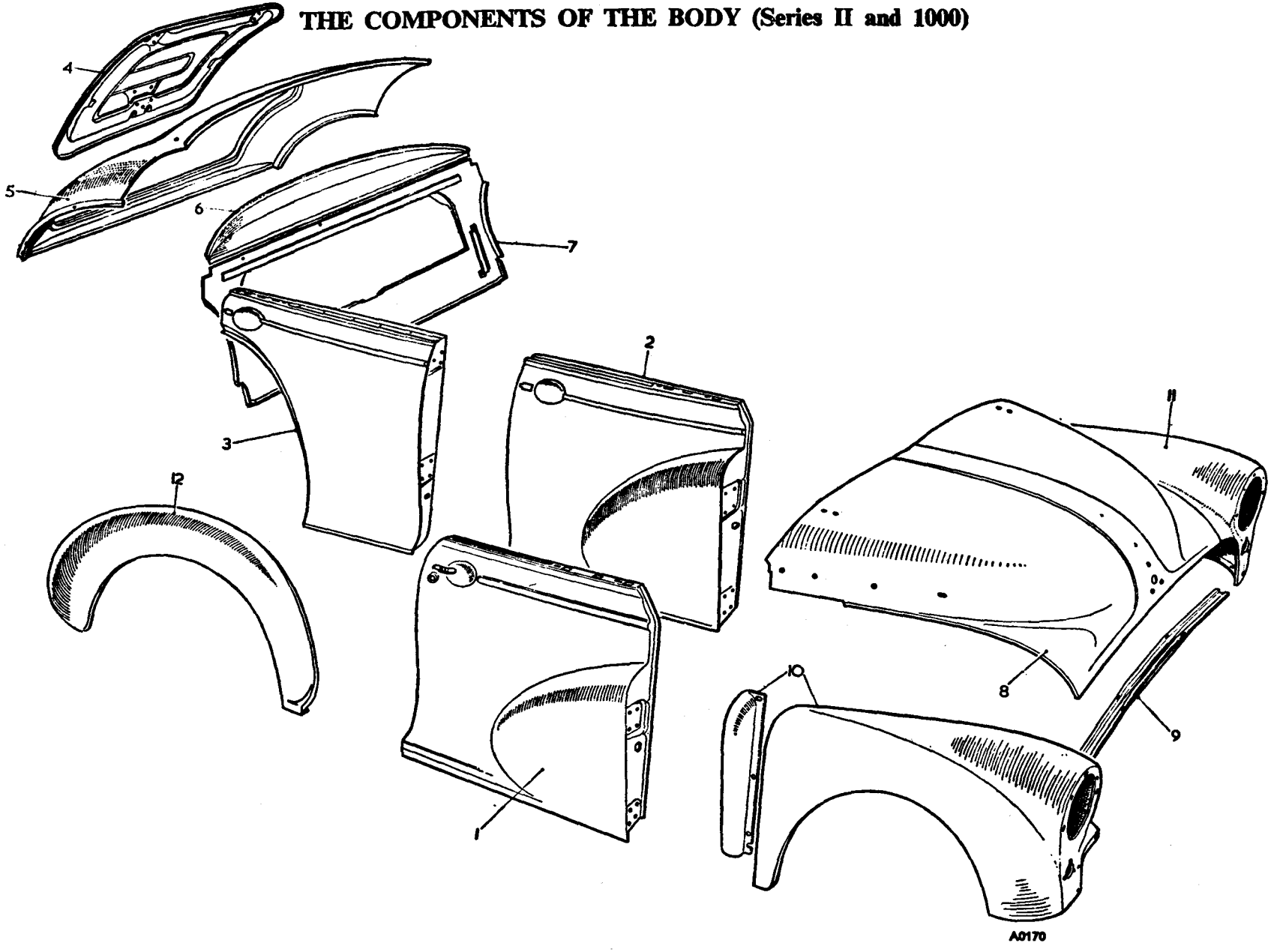

KEY TO THE COMPONENTS OF THE BODY (Series II and 1000)

No.	*Description*	*No.*	*Description*	*No.*	*Description*
1.	Door assembly—front—R.H. (2-door Saloon, Tourer, Traveller).	5.	Trunk panel assembly.	9.	Cross-member assembly—bonnet.
2.	Door assembly—front—R.H. (4-door Saloon).	6.	Panel assembly—rear squab support—upper.	10.	Wing—front—R.H.
3.	Door assembly—rear—R.H. (4-door Saloon).	7.	Panel assembly—rear squab support—lower.	11.	Wing—front—L.H.
4.	Trunk lid assembly.	8.	Bonnet—panel assembly.	12.	Wing—rear.

THE COMPONENTS OF THE BODYWORK—METAL (Traveller)

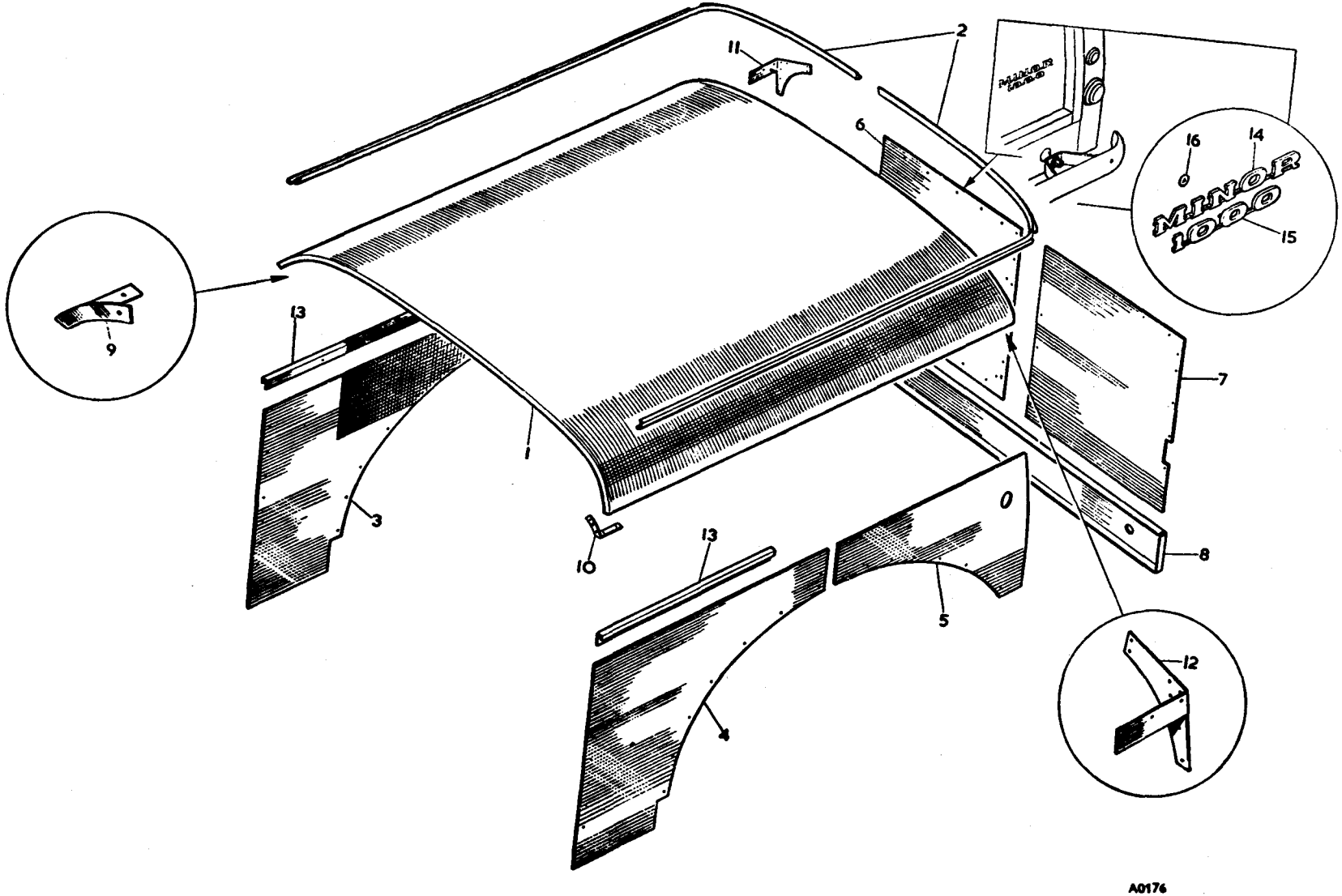

KEY TO THE COMPONENTS OF THE BODYWORK—METAL (Traveller)

No.	*Description*
1.	Panel—body roof.
2.	Drip moulding—body roof.
3.	Panel—body side—R.H. front.
4.	Panel—body side—L.H. front.
5.	Panel—body side—L.H. rear.
6.	Panel—rear door—R.H.
7.	Panel—rear door—L.H.
8.	Panel—body—rear bottom.
9.	Bracket—front top corner—R.H.
10.	Bracket—front top corner—L.H.
11.	Bracket—rear top corner—R.H.
12.	Bracket—rear top corner—L.H.
13.	Filler piece—glass run.
14.	Nameplate—rear door—'Minor
15.	Nameplate—rear door—'1000'.
16.	Trimount to ratchet—nameplates to door.

THE COMPONENTS OF THE BODY—FRONT END (Traveller)

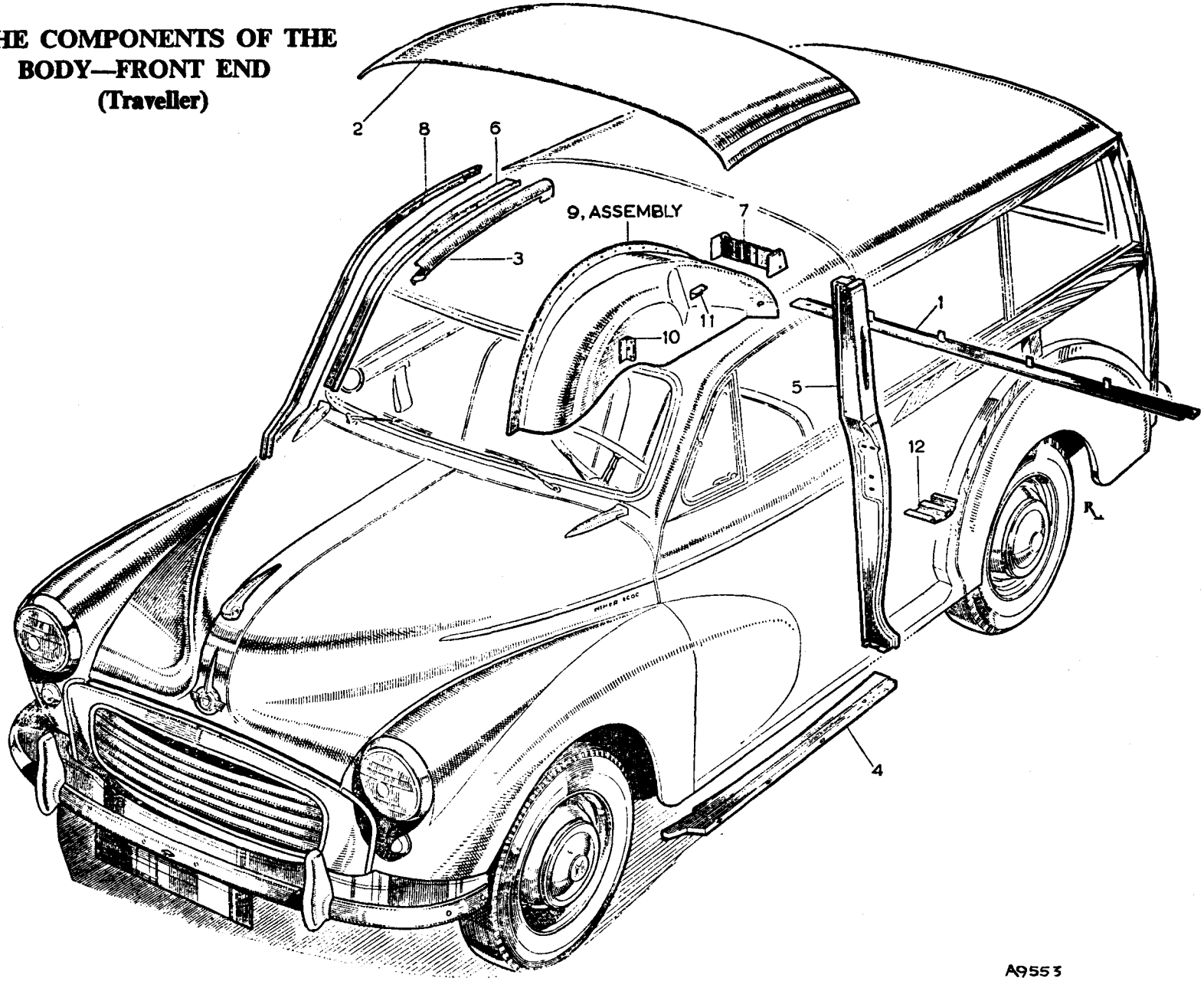

KEY TO THE COMPONENTS OF THE BODY—FRONT END (Traveller)

No.	*Description*
1.	Extension assembly—rear floor.
2.	Panel—roof.
3.	Reinforcement—roof side inner.
4.	Extension—floor side.
5.	Pillar assembly—front door.
6.	Panel—door opening top facing.
7.	Bracket—rear body mounting.
8.	Finisher—drip moulding.
9.	Wheel arch assembly.
10.	Bracket—rear floor support (front).
11.	Bracket—rear floor support (rear).

MISCELLANEOUS PANELS AND COVERS (Series II, 1000, and TRAVELLER)

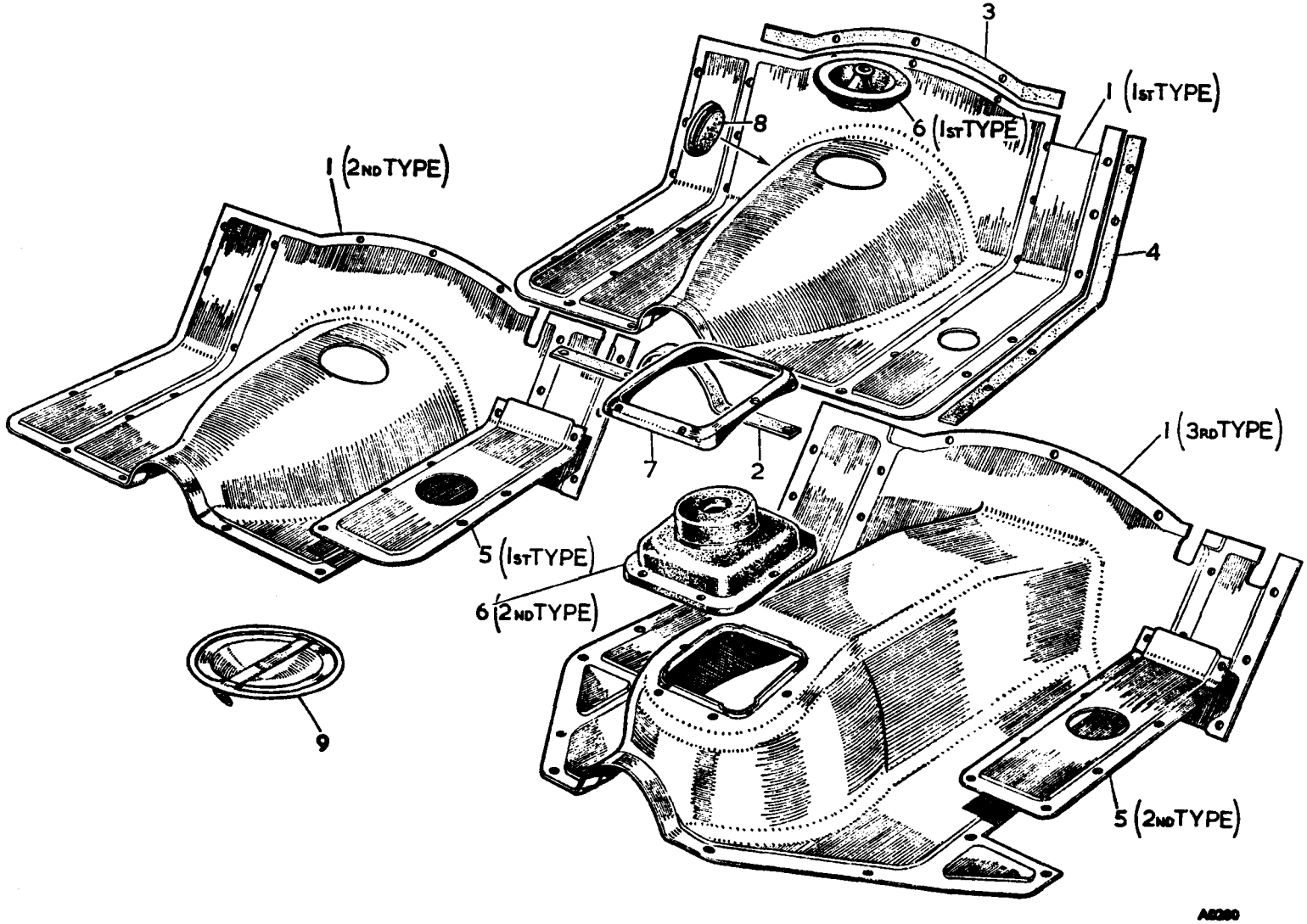

KEY TO THE MISCELLANEOUS PANELS AND COVERS (Series II, 1000, and Traveller)

No.	*Description*
1.	Cover assembly—gearbox.
2.	Seal for cover—rear end.
3.	Seal for cover—top front.
4.	Seal for cover—sides.
5.	Cover-plate—master cylinder.
6.	Grommet—change speed lever.
7.	Retaining plate—grommet.
8.	Cover—oil filler hole.
9.	Plate—axle filler hole.

Section R.28

BODY ALIGNMENT CHECKING JIG

A new basic body alignment checking jig 18G 560 has been developed which, when used with various adaptor sets (all of which are colour-coded), provides a positive means of checking alignment of a wide range of vehicles. As the need arises further adaptor sets will be introduced for this basic jig which will progressively increase its application.

This tool is intended to be used solely as a checking fixture; under no circumstances must any welding be undertaken with the body in position on the jig.

(2) Attach the two torsion bar rear check brackets (5) to plate 3 with the faces bearing the model names facing forward. These brackets are stamped 'R.H.' and 'L.H.', although reversal is impossible.

(3) Detach the four body support brackets (12, 13) from the side-members of the basic jig and re-assemble them in the forward position, ensuring that the fixings (one screw, three nuts and bolts on each) are quite secure.

(4) Screw the four domed support pins (8, 11) well down into the threaded holes provided in the support brackets, the longer pair at the rear and the shorter pair near the centre of the jig.

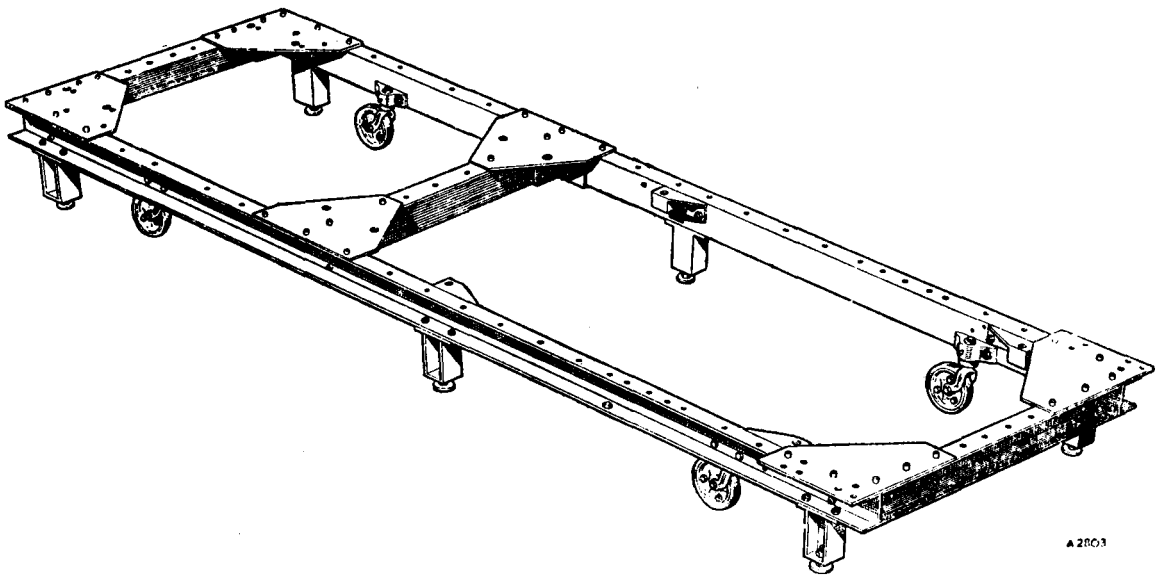

Fig. R.49

Section R.29

SETTING-UP PROCEDURE

For Minor models the basic adaptor set 18G 560 A and adaptor set 18G 560 D are required in addition to the basic jig, and the setting-up procedure is as follows:

(1) Fit the plates numbered 1 and 2 on the basic jig in the positions marked on the inside face on the left-hand side-member, using the socket screws, nuts, and washers supplied. The arrows marked on the labels must face the front of the jig, which bears a level indicator in the centre of the front member. The plate numbered 3 is attached similarly, using the forward pair of holes on each side of the jig where labelled.

NOTE.—Plates 1, 2, and 3 are identified by labels; the item numbers quoted in the instructions (2) to (6) refer to Fig. R.50.

(5) Place the front jacking bar (4) in position on the shorter pair of support pins (8). The rear jacking bar now requires assembly as follows.

Place together the ends marked 'FRONT' of the two larger angles (9). Bolt the smaller angle (10) inside at the centre, using six socket screws, nuts, and washers on the front face. Place the assembly on the two domed support pins at the rear of the jig (11), ensuring that the side marked 'FRONT' faces in that direction.

(6) Remove the two rear body support pads (7) from the rear jacking bar for this model.

NOTE.—Item numbers quoted in instructions (7) to (10) refer to Fig. R.51.

(7) From adaptor set 18G 560 D take the items painted green and yellow/green. Attach the support bracket (1) for the front engine mounting checking plate to the centre of plate 1.

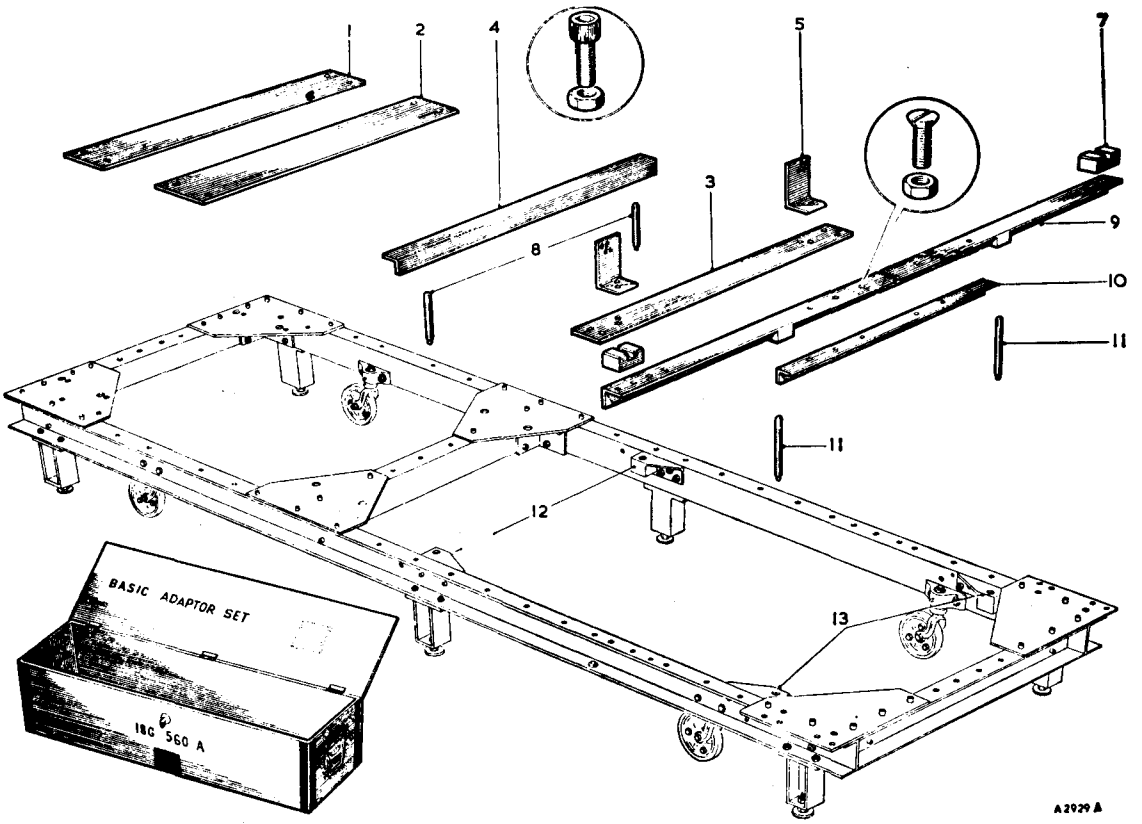

Fig. R.50

(8) Attach the two front suspension eyebolt checking brackets (10) to either side of plate 2 (second from front), noting that these brackets are marked 'R.H.' and 'L.H.'.

(9) Assemble a packing plate (13) to each rear spring front shackle checking bracket (12) with the two countersunk screws provided, ensuring that the scribed marks coincide. Then attach these two assemblies to the rear corner plates on each side of the basic jig, using the front set of three holes. The holding bolts require washers under their heads, and should be left sufficiently slack to allow the bracket to be tapped sideways.

(10) After ensuring that the jig is positioned on a level floor, lower the six feet (14) by means of the adjusting nuts, thus taking the weight of the jig from the castors. The jig must be levelled at the same time, utilizing the levelling indicators positioned at either side of the rear and the centre front. Tighten the locknuts.

NOTE.—Items 3, 4, and 7 are not required for Minor models.

Section R.30

CHECKING BODY ALIGNMENT

(1) Suspend the body in an approximately level position over the jig. Remove all loose items such as bumpers, rear spring bush plates, front suspension eyebolts, etc.

(2) Lower the body until, by gently pressing down the front end, the front suspension eyebolt checking pins (17) can be inserted through the checking brackets into the body. Insert the spacing collars (11) between the brackets and the body. Continue lowering the body, and the jacking bars if necessary, until the rear spring front shackle brackets are in line with the checking brackets (12). If necessary, tap the checking brackets to align them with the shackle bolt holes, and then insert the checking bosses (15).

(3) Remove the bosses, tighten the socket screws, and adjust the jacking bars to take the weight of the body, re-checking the alignment so that the bosses may be reinserted, and make final adjustments to

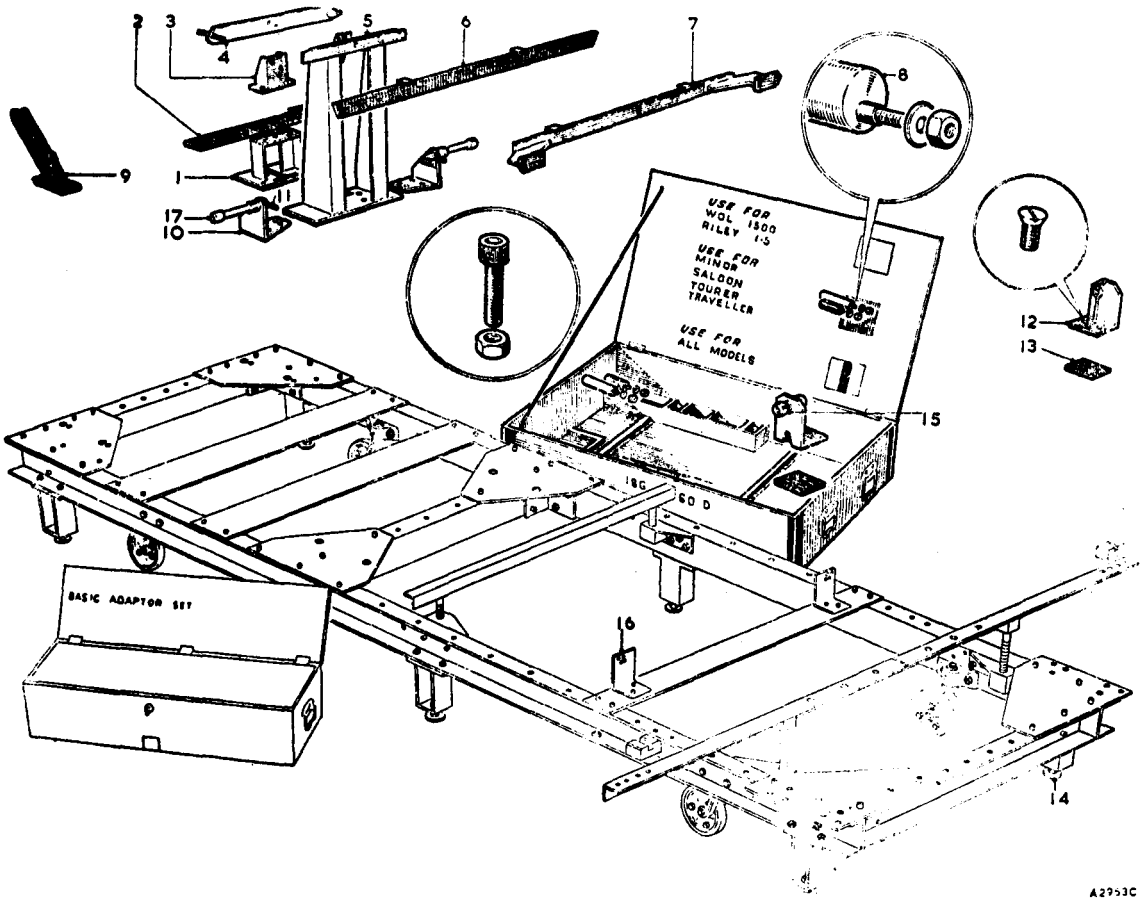

Fig. R.51

the jacking bars until the front suspension checking pins and the rear spring shackle checking bosses can be rotated by hand.

The body alignment is satisfactory when:

(*a*) The front eyebolt checking pins can be entered by hand through the checking brackets in the body. Any gap which may exist between the checking brackets and the longitudinal members should be made uniform on either side.

(*b*) The rear checking brackets are within the scribed tolerance range with the checking bosses inserted.

Section R.31

ADDITIONAL CHECKS POSSIBLE ON MINOR MODELS

Torsion bar rear anchorage alignment

Locate the two smaller checking bosses (8) in the top inner holes (marked 'MINOR') of the brackets (16). The alignment is within the tolerance when the checking bosses can be entered into the holes in the torsion bar anchorage bracket by turning the bosses on their eccentric fixing studs. Alignment is ideal when, with the checking bosses located, the notch in each boss is uppermost and an equal clearance all round is obtained.

Front suspension alignment

Mount the support bracket (5) onto the centre of plate 2 (second from front) and attach the checking bar (6) to the top rear face of the support with the centre-bolt.

Alignment is within the tolerance range when the whole of each of four shock absorber mounting holes in the body cross-member is visible through the sighting holes in the checking bar. A parallel gap of up to ¼ in. (6·35 mm.) should exist between the cross-member and the rear face of the checking bar.

Front engine mounting alignment

Mount the checking plate (2) onto the support bracket (1). The alignment is within the tolerance range when

the whole of each of four engine mounting bracket fixing holes in the longitudinal member is visible through the sighting holes in the checking plate. A parallel gap of up to $\frac{1}{4}$ in. (6·35 mm.) should exist between the longitudinal member and the under side of the checking plate.

Front bumper mounting alignment

Mount the two checking brackets (9), which are marked 'R.H. (front)' and 'L.H. (front)' respectively, onto the front corner plates on the basic jig.

The alignment is within the tolerance range when each bumper mounting stud lies within the cut-out at the top of the checking bracket.

Rear spring shackle height and alignment

Vertical height

Suspend a plumb-line from the centre of the front and rear shackles and mark these positions on the floor. The measurement between the two should be $43\frac{3}{32}$ in.$\pm\frac{1}{16}$ in. (1094$\pm$1·59 mm.). Measure the height from the floor to the centre of each shackle. The difference between these two measurements should be $4\frac{29}{32}$ in.$\pm\frac{1}{16}$ in. (124.6$\pm$1·59 mm.).

Alignment

Remove the front shackle checking bracket (12, Fig. R.51) from the jig, attach a rear road spring (unused, if possible) to the front shackle in the normal manner, and lift the rear end into position near to the rear shackle attachment bracket. If there is no excessive looseness in the front shackle, the rear eye of the spring and the rear shackle attachment bracket should be in line.

Section R.32

LOCATING A NEW FRONT END ASSEMBLY

(1) Assemble the jig and adaptor sets as described in Section R.29, paragraphs (1) to (10).

(2) Set each rear spring front shackle checking bracket (with packing plate assembled) in the centre of the tolerance range, tighten the fixing bolts, and remove the checking bosses.

(3) Lower the new front end assembly onto the jig until it is in contact with the front jacking bar. Screw down the jacking bar support pins until the front eyebolt checking pins will slide through the checking brackets into the front end assembly. Insert the spacing collars between the brackets and the front end assembly, and make uniform any gap which may exist on either side.

(4) Adjust the front jacking bar until the torsion bar rear anchorage checking bosses (coloured green) can be located in the top inner holes (marked 'MINOR') in the brackets. The notch in each checking boss should be uppermost, with an equal clearance all round.

(5) Lower the body over the jig until the rear spring front shackles are in line with the checking brackets. Adjust the rear jacking bar until it is in contact with the body; continue adjusting until the shackle checking bosses can be entered easily through the brackets and shackles. The mating faces of the body and the front end should now be in contact.

(6) To ensure that the body is correctly positioned in relation to the front end assembly carry out the check previously described in Section R.31 under **'Rear spring shackle height and alignment'** and support the rear of the body.

(7) Clip the body and the front end securely, drilling holes and bolting as necessary to retain the correct relative positioning of the two assemblies.

(8) Remove the body and front end from the jig for welding.

Section R.33

BRIGHT TRIM

Metal polish must not be used to clean chromium, plastic, stainless steel, or anodized aluminium bright parts. Wash them frequently with soap and water, and when the dirt has been removed polish the surface with a clean, dry cloth or chamois-leather until bright. Never use an abrasive.

A slight tarnish may be found on stainless steel that has not been washed regularly, and this can be removed with impregnated wadding such as is used on silverware.

Surface deposits on chromium parts may be removed with a chromium cleaner.

An occasional application of wax polish or light oil to metal trim will help to preserve the finish, particularly during winter, when salt has been applied to the roads, but these protectives should not be applied to plastic finishers.

Section R.34

SEAT BELT ANCHORAGE FITTING INSTRUCTIONS

(Minor 1000 Convertible and 2-door Saloon)

Description

Seat belt kits, complete with anchorage fittings, are available for Minor 1000 Convertibles prior to Body No. 66467, except Body No. 66338 to 66400 inclusive, and

also for Minor 1000 2-door Saloons prior to Body No. 362295, except Body Nos. 362117 to 362200 inclusive. The belts, which may be fitted for both the driver's and front seat passenger's use, are available under Part No. BDA 522 and should be fitted by a Distributor or Dealer.

A kit comprises a long and a short belt, each of which is adjustable. When in use, the tongue on the long belt engages a quick-release buckle on the short belt; the positions of the tongue and buckle may be adjusted to suit individual users. A stowage clip is provided to secure the long belt when it is not in use and a warning label is included for the benefit of rear seat passengers.

The upper bracket of the long belt (having two holes) is fitted on the upper sill beneath the rear side window approximately 8 in. (20·32 cm.) behind the door aperture. The lower bracket of the long belt is fitted to the floor panel adjacent to the lower sill. The end bracket of the short belt is fitted to the side of the transmission shaft tunnel farthest from the seat being equipped.

The fitting instructions for the anchorages are as follows.

Window sill fixing point

(1) Remove the rear quarter trim panel and ensure that any wiring inside the sill is clear of the attachment point.

(2) Position the reinforcing plate on the outside of the sill approximately 8 in. (20·32 cm.) behind the door aperture.

(3) Mark off and drill two $\frac{5}{16}$ in. (7·9375 mm.) holes in the sill to correspond with those in the end bracket.

(4) Place the reinforcing plate in the sill and secure the end bracket to the sill with the two washers and bolts.

(5) Refit the trim panel and then fully tighten the end bracket securing bolts.

Floor fixing point

(1) Release the carpet at the base of the door pillar and place the reinforcing plate, having two plain holes, on the floor 2 in. (5·08 cm.) behind the centre pillar and as close to the sill as possible.

(2) Use the reinforcing plate as a template and mark out two holes on the floor at right angles to the sill. Drill two $\frac{5}{16}$ in. (7·9375 mm.) holes in the floor.

(3) Insert the 'U' bolt through the hole in the remaining bracket of the long belt and screw one nut onto each arm of the 'U' bolt.

(4) Place a self-locking washer under each nut and insert the 'U' bolt through the holes in the floor.

(5) From the under side of the floor, place the reinforcing plate on the 'U' bolt and secure it with the two washers and nuts.

(6) Cut two slots in the carpet to enable it to lie flat and refit the carpet around the 'U' bolt.

Drive shaft tunnel

(1) Use the remaining reinforcing plate to mark out two holes on the carpet covering the side of the drive shaft tunnel farthest from the seat being equipped. The holes are to be positioned so that the lower end of the belt is 4 in. (10·16 cm.) behind back of the front seat when the seat is in the fully backward position.

(2) Punch two $\frac{3}{8}$ in. (9·525 mm.) holes in the carpet at the positions marked.

(3) Using the holes in the carpet as a template, mark and drill two $\frac{5}{16}$ in. (7·9375 mm.) holes in the tunnel.

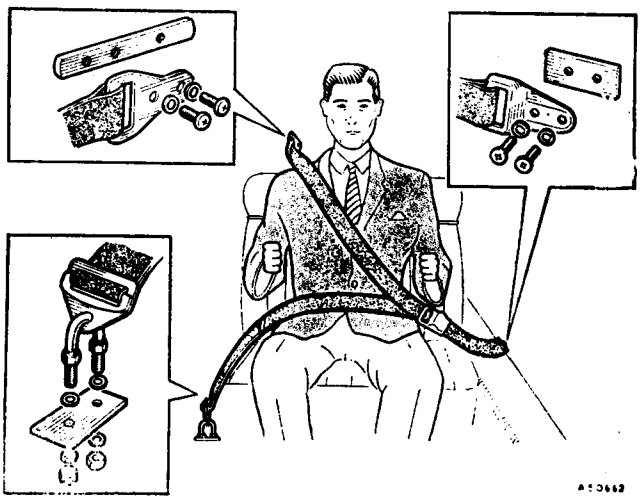

Fig. R.52

Seat belt anchorage fittings (Minor 1000 Convertible and 2-door Saloon)

(4) Place the reinforcing plate in the tunnel and secure the end bracket of the short belt to the side of the tunnel with the washers and bolts provided.

(5) If the bolts protrude through the reinforcing plate it is important that they be marked, removed, trimmed off flush, and refitted.

Belt clip and warning plate

(1) Position the belt stowage clip on the upper sill between the belt attachment bracket and the floor pillar.

(2) Use a No. 31 drill (·120 in. diameter) to drill the two fixing holes in the sill.

(3) Secure the clip to the sill with the self-tapping screws provided.
(4) Position the warning label on the rear of the front seat squab as near to the top of the squab as possible.
(5) Use a No. 38 drill (·101 in. diameter) to drill the two fixing holes.
(6) Secure the label to the squab with the two No. 6 screws provided.

Section R.35

SEAT BELT FITTING INSTRUCTIONS

(Minor 1000 Convertible and 2-door Saloon)

Anchorage points to facilitate the fitting of seat belts have been embodied in Minor 1000 Convertibles from

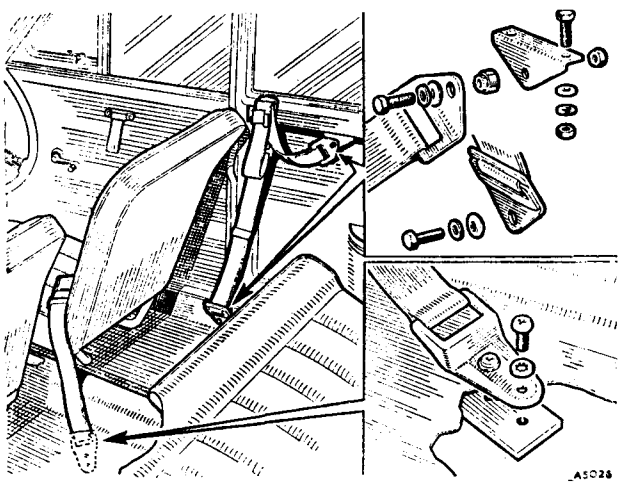

Fig. R.53

Seat belt and belt clip attachment points (Minor 1000 Convertible and 2-door Saloon)

Body Nos. 66338 to 66400 inclusive and 66467 onwards, and in Minor 1000 2-door Saloons from Body Nos. 362117 to 362200 inclusive and 362295 onwards. The seat belt kits are available under Part No. ADA 3896 and should be fitted by a Distributor or Dealer.

The seat belt itself and the anchorage point positions are similar to those described in Section R.34.

To fit the seat belts proceed as follows.

Window sill fixing point

(1) Remove the rear trim pad.
(2) Secure the chromium-plated angle bracket to the lower flange of the rear quarter inner panel with the screws, washers, and nuts provided, passing the screws through the existing holes and inner reinforcement in the body.
(3) Place the shouldered distance piece in the bracket of the belt (larger diameter towards the chromium-plated bracket) and secure the two together, using the screw, waved and spring washers, and nut.
(4) Replace the rear quarter trim pad.

Floor sill fixing point

Cut away the carpet sufficiently to ensure a metal-to-metal contact when the other bracket of the long belt is secured with the screw, waved washer, and distance piece.

Drive shaft tunnel

(1) Lift the carpet and remove the two plugs in the floor panel adjacent to the opposite side of the tunnel to the seat being equipped.
(2) Buckle the belt in position and mark the carpet where the bracket will pass through the floor. Cut a slit in the carpet and pass the bracket through the slit.
(3) Position the tapping plate underneath the floor panel and secure the bracket to the plate with the screws and lock washers provided.

Belt clip and warning plate

(1) Position the belt stowage clip on the upper sill between the belt attachment bracket and the floor pillar.
(2) Use a No. 31 drill (·120 in. diameter) to drill the two fixing holes in the sill.
(3) Secure the clip to the sill with the self-tapping screws provided.
(4) Position the warning label on the rear of the front seat squab as near to the top of the squab as possible.
(5) Use a No. 38 drill (·101 in. diameter) to drill the two fixing holes.
(6) Secure the label to the squab with the two No. 6 screws provided.

Section R.36

SEAT BELT ANCHORAGE FITTING INSTRUCTIONS

(Minor 1000 4-door Saloon)

Description

Seat belt kits, complete with anchorage fittings, are available for cars prior to Body No. 204617. The belts, which may be fitted for both the driver's and front seat

passenger's use, are available under Part No. ADA 532 and should be fitted by a Distributor or Dealer.

A kit comprises a long and a short belt, each of which is adjustable. When in use, the tongue on the long belt engages a quick-release buckle on the short belt; the positions of the tongue and buckle may be adjusted to suit individual users. A stowage clip is provided to secure the long belt when it is not in use and a warning label is included for the benefit of rear seat passengers.

The upper end of the long belt is attached to a fixing bar that is bolted to the centre pillar and the lower bracket of the belt is fitted to the floor panel adjacent to the sill. The end bracket of the short belt is fitted to the side of the transmission drive shaft tunnel farthest from the seat being equipped.

NOTE.—Body Nos. 202518 to 202600 inclusive and 202610 to 204616 inclusive already incorporate the centre pillar upper fixing point and the tunnel fixing point. On these cars it will only be necessary to fit the centre pillar lower fixing point as outlined in paras. (1) to (9) and the floor fixing point as outlined in paras. (1) to (6).

The fitting instructions for the anchorages are as follows.

Centre pillar fixing point

(1) Position the fixing bar on the outside of the pillar liner so that the centre of the upper hole for the fixing bolt is approximately 1⅛ in. (28·5 mm.) below the bottom surface of the cant rail.

(2) From the bar mark off the two fixing bolt holes on the liner.

(3) Remove the liner and, using a ½ in. wad punch, punch out the two holes for the fixing bolts in the liner.

(4) Refit the liner and mark out the two fixing bolt holes on the pillar. Remove the liner and the trafficator.

(5) Position the small reinforcing plates across the pillar so that the fixing bolt holes in the plates line up with those already marked on the pillar. Mark off the holes for the reinforcing plate securing screws on each side of the main fixing bolt holes.

(6) Drill in the pillar two $\frac{7}{16}$ in. (11·1125 mm.) clearance holes for the fixing bolts and two 10 UNF. clearance holes for the securing screws.

(7) Pass the reinforcing plates through the trafficator opening and engage their securing screws. Align the bolt holes in the plates with the clearance holes in the pillar, ensure that the plates are clear of any wiring, and fully tighten the securing screws.

(8) Connect and refit the trafficator and the liner.

(9) Secure the fixing bar (with the upper end of the belt attached to it) to the pillar with the washers and bolts provided.

Floor fixing point

(1) Release the carpet at the base of the pillar and place the reinforcing plate, having the two plain holes, across the floor 2 in. (5·08 cm.) behind the centre pillar and as close to the sill as possible.

(2) Use the plate as a template and mark out two holes on the floor at right angles to the sill. Drill two $\frac{5}{16}$ in. (7·9375 mm.) holes in the floor.

(3) Insert the 'U' bolt through the hole in the remaining end bracket of the long belt and screw one nut onto each arm of the 'U' bolt.

(4) Place a self-locking washer under each nut and insert the 'U' bolt through the holes in the floor.

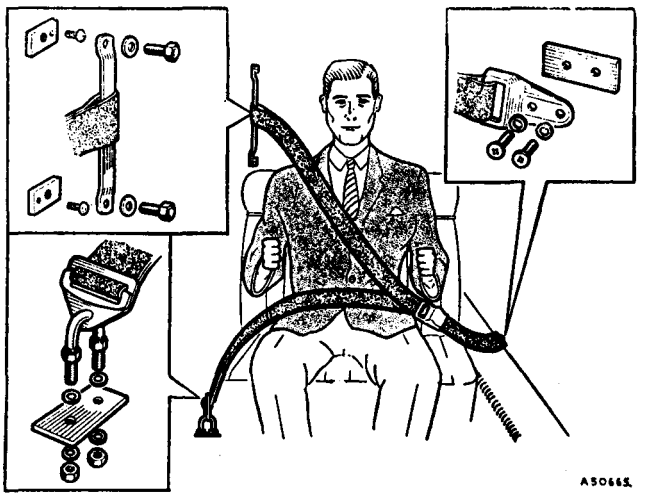

Fig. R.54

Seat belt anchorage fittings (Minor 1000 4-door Saloon)

(5) From the under side of the floor place the reinforcing plate on the 'U' bolt and secure it with the two washers and nuts provided.

(6) Cut two slots in the carpet to enable it to lie flat and refit the carpet around the 'U' bolt.

Drive shaft tunnel

(1) Use the remaining reinforcing plate to mark out two holes on the carpet covering the side of the drive shaft tunnel farthest from the seat being equipped. The holes are to be positioned so that the lower end of the belt is 4 in. (10·16 cm.) behind the back of the front seat when the seat is in the fully backward position.

(2) Punch two $\frac{3}{8}$ in. (9·525 mm.) holes in the carpet at the positions marked.

(3) Using the holes in the carpet as a guide, mark and drill two $\frac{5}{16}$ in. (7·9375 mm.) clearance holes in the tunnel.

(4) Place the reinforcing plate in the tunnel and secure the end bracket of the short belt to the side of the tunnel with the washers and bolts provided.

(5) If the bolts protrude through the reinforcing plate it is important that they be marked, removed, trimmed off flush, and refitted.

Belt clip and warning plate

(1) Position the belt clip stowage horizontally on the pillar 4 in. (10·16 cm.) below the lower fixing point.

(2) Use a No. 31 drill (·120 in. diameter) to drill the two fixing holes in the pillar.

(3) Secure the clip to the pillar with the two fixing screws provided.

(4) Position the warning label on the rear of the front seat squab as near to the top of the squab as possible.

(5) Use a No. 38 drill (·101 in. diameter) to drill the two fixing holes.

(6) Secure the label to the squab with the two No. 6 screws provided.

Section R.37

SEAT BELT FITTING INSTRUCTIONS
(Minor 1000 4-door Saloon)

Anchorage points to facilitate the fitting of seat belts have been embodied in Minor 1000 4-door Saloon cars from Body No. 204617 onwards. The seat belt kits are available under Part No. ADA 3912 and should be fitted by a Distributor or Dealer.

The seat belt itself and the anchorage point positions are similar to those described in Section R.36.

To fit the seat belts proceed as follows.

Centre pillar fixing point

(1) Locate the two centre pillar fixing holes by feeling the surface of the trim and cut the trim in the form of a cross immediately over the two holes.

(2) Fold the edges of the trim under the trim panel.

(3) Attach the bar-type bracket of the long belt to the pillar, using the screws and washers provided (see [C], Fig. R.55).

Floor sill fixing point

(1) Locate the sill fixing point and cut the carpet immediately over the hole to ensure a metal-to-metal contact between the distance piece and the sill.

(2) Place the shouldered distance piece in the under side of the bottom end bracket of the long belt so that the large diameter of the distance piece will abut the sill.

(3) Secure the bracket to the sill with the screw, plain washer, and waved washer; ensure that the wave of the washer faces the bracket.

Drive shaft tunnel

(1) Lift the carpet and remove the two plugs in the floor panel adjacent to the opposite side of the tunnel to the seat being equipped.

(2) Buckle the belt in position and mark the carpet where the bracket (of the short belt) will pass

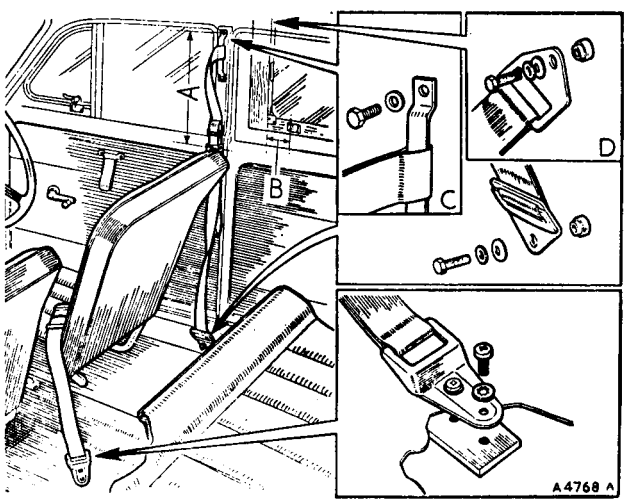

Fig. R.55

Seat belt and belt clip attachment points (Minor 1000 4-door Saloon and Traveller)

through the floor. Cut a slit in the carpet and pass the bracket through the slit.

(3) Position the tapping plate underneath the floor panel and secure the bracket to the plate with the screws and lock washers provided.

Belt clip and warning plate

(1) Position the belt clip on the centre pillar 15 in. (381 mm.) below the upper fixing point of the bar-type bracket of the long belt (see (A), Fig. R.55). The open end of the clip is to face forward.

(2) Use a No. 31 drill (·120 in. diameter) to drill the two fixing holes in the pillar.

(3) Secure the clip to the pillar with the two fixing screws provided.

(4) Position the warning label on the rear of the front seat squab as near to the top of the squab as possible.

(5) Use a No. 38 drill (·101 in. diameter) to drill the two fixing holes.

(6) Secure the label to the squab with the two No. 6 screws provided.

Section R.38

SEAT BELT ANCHORAGE FITTING INSTRUCTIONS

(Minor 1000 Traveller)

Description

Seat belt kits, complete with anchorage fittings, are available for cars prior to Body No. 90769. The belts, which may be fitted for both the driver's and the front seat passenger's use, are available under Part No. BDA 523 and should be fitted by a Distributor or Dealer.

A kit comprises a long and a short belt, both of which are adjustable. When in use, the tongue on the long belt engages a quick-release buckle on the short belt; the positions of the tongue and buckle may be adjusted to suit individual users. A stowage clip is provided to secure the long belt when it is not in use and a warning label is included for the benefit of rear seat passengers.

The upper bracket of the long belt (having two holes) is fitted to the centre pillar and the lower bracket of the belt to the floor panel adjacent to the lower sill. The end bracket of the short belt is fitted to the side of the drive shaft tunnel farthest from the seat being equipped.

The fitting instructions for the anchorages are as follows.

Pillar fixing

(1) Remove the wooden capping from the centre pillar and the trafficator unit to avoid damage to the wiring.

(2) Position the upper bracket of the long belt on the centre pillar approximately 1 in. (25·4 mm.) from the top line of the door aperture to the centre line of the holes and with the inner edge of the slot in line with the edge of the door shut pillar to ensure that the bolt heads will be evenly spaced and parallel with the drip moulding.

(3) Using the bracket as a template mark out and drill two $\frac{5}{16}$ in. (7·9375 mm.) holes through the inner and outer skin of the pillar and at right angles to it.

(4) Enlarge the holes on the outside of the pillar to accept the internally threaded sleeve nuts.

(5) Trim the ends of the sleeve nuts as necessary so that when the heads are against the outside of the pillar without the rubber washers in position, the ends of the nuts abut the inner face of the pillar.

(6) Fit the rubber washers to the nuts and insert the nuts into the pillar from the outside.

(7) Fit the bracket to the inside of the pillar using the washers and nuts provided.

(8) Replace the trafficator unit and wooden capping.

Floor fixing point

(1) Release the carpet at the base of the door pillar and place the reinforcing plate, having the two plain holes, on the floor 2 in. (5·08 cm.) behind the door pillar and as close to the sill as possible.

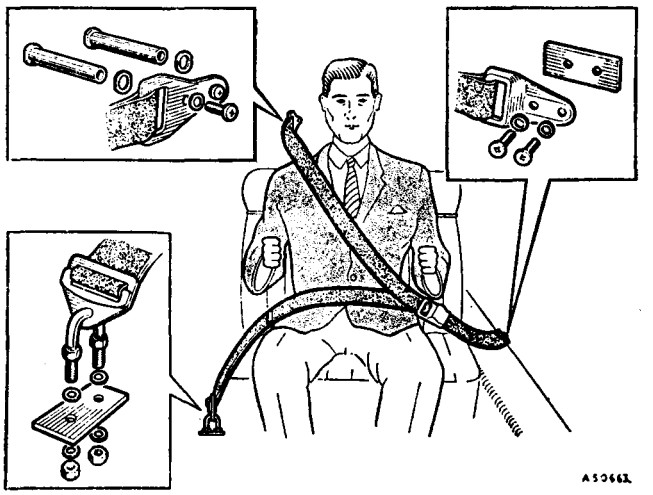

Fig. R.56

Seat belt anchorage fittings (Minor 1000 Traveller)

(2) Using the reinforcing plate as a template, mark out and drill two $\frac{5}{16}$ in. (7·9375 mm.) holes in the floor panel at right angles to the sill.

(3) Insert the 'U' bolt through the holes in the remaining end bracket of the long belt and screw one nut on to each arm of the 'U' bolt.

(4) Place a self-locking washer under each nut and insert the 'U' bolt through the holes in the floor.

(5) From the under side of the floor place the reinforcing plate on the 'U' bolt and secure it with the two washers and nuts.

(6) Cut two slots in the carpet to enable it to lie flat, and refit the carpet around the 'U' bolt.

Drive shaft tunnel

(1) Use the remaining reinforcing plate to mark out two holes on the carpet covering the side of the drive shaft tunnel farthest from the seat being equipped. The holes are to be positioned so that the lower end of the belt is 4 in. (10·16 cm.) behind the back of the front seat when the seat is in the fully backward position.
(2) Punch two $\frac{3}{8}$ in. (9·525 mm.) holes in the carpet at the positions marked.
(3) Using the holes in the carpet as a guide, mark out and drill two $\frac{5}{16}$ in. (7·9375 mm.) holes in the tunnel.
(4) Place the reinforcing plate in the tunnel and secure the short belt end bracket to the side of the tunnel with the washers and bolts provided.
(5) If the bolts protrude through the reinforcing plate it is important that they be marked, removed, trimmed off flush and refitted.

Belt clip and warning plate

(1) Position the belt stowage clip horizontally on the door pillar 6 in. (15·34 cm.) below the roof panel.
(2) Use a No. 31 drill (·120 in. diameter) to drill the two fixing holes in the door pillar.
(3) Secure the clip to the door post with the screws provided.
(4) Position the warning label on the rear of the front seat squab as near to the top of the squab as possible.
(5) Use a No. 38 drill (·101 in. diameter) to drill the two fixing holes.
(6) Secure the label to the squab with the two No. 6 screws provided.

Section R.39

SEAT BELT FITTING INSTRUCTIONS
(Minor 1000 Traveller)

Anchorage points to facilitate the fitting of seat belts have been embodied in Traveller vehicles commencing at Body No. 90769. The seat belt kits are available under Part No. ADA 3897 and should be fitted by a Distributor or Dealer.

The seat belt itself and the anchorage point positions are similar to those described in Section R.38.

To fit the seat belts proceed as follows.

Centre pillar fixing point

(1) Uncover the centre pillar fixing weld-nut by drilling a $\frac{13}{16}$ in. (20·32 mm.) hole in the wood capping on the pillar. To fix the position of the hole, mark with a pencil the top edge of the capping on the panel beneath it. Check that the front edge of the capping is flush with the edge of the panel. Detach the capping by removing the four securing screws. The dimension from the pencil line to the weld-nut in the pillar can then be transferred to the capping, The fore-and-aft dimension can likewise be transferred. Drill the hole and replace the capping.
(2) Place the shouldered distance piece into the under side of the top end bracket of the long belt so that the large diameter of the distance piece will abut the pillar.
(3) Secure the bracket to the pillar weld-nut with the screw, plain washer, and waved washer (see [D], Fig. R.55); ensure that the wave of the washer faces the bracket.

Floor sill fixing point

(1) Locate the sill fixing point and cut the carpet immediately over the hole to ensure a metal-to-metal contact between the distance piece and the sill.
(2) Place the shouldered distance piece in the under side of the bottom end bracket of the long belt so that the large diameter of the distance piece will abut the sill.
(3) Secure the bracket to the sill with the screw, plain washer, and waved washer; ensure that the wave of the washer faces the bracket.

Drive shaft tunnel

(1) Lift the carpet and remove the two plugs in the floor panel adjacent to the opposite side of the tunnel to the seat being equipped.
(2) Buckle the belt in position and mark the carpet where the bracket will pass through the floor. Cut a slit in the carpet and pass the bracket through the slit.
(3) Position the tapping plate underneath the floor panel and secure the bracket to the plate with the screws and lock washers provided.

Belt clip and warning plate

(1) Position the belt clip on the centre pillar 15 in. (381 mm.) below the upper fixing point of the long belt (see (A), Fig. R.55). The open end of the clip is to face rearward.
(2) Use a No. 31 (·120 in. diameter) drill to drill two holes in the pillar and secure the clip to the pillar with the two No. 8 screws provided.
(3) Secure the warning plate to the rear of the front seat squab as detailed in Section R.38.

SECTION S

THE HEATER

OF THE MORRIS MINOR (Series MM)

DESCRIPTION

The car heater is fitted centrally between the parcel tray and control panel, and incorporates the motor and control switch. The kit includes a pump of the impeller type for fitment to the front of the cylinder block, and the heater can therefore only be used on Morris Minor cars with engines commencing at No. 77001. These engines can be distinguished by the large cover-plate at the front of the cylinder block.

Section S.1

TO FIT THE HEATER

(1) Drain the water from the cooling system by opening the tap at the base of the radiator and removing the filler cap, remembering to collect the water for re-use if it contains anti-freeze mixture.

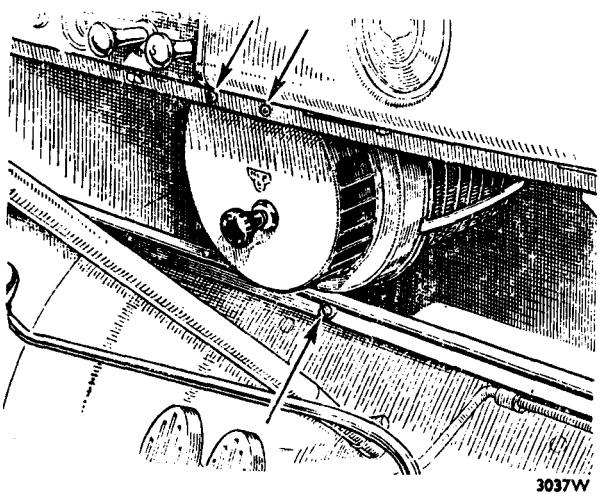

Fig. S.1

The heater is fitted centrally between the control panel and the parcel tray, as indicated. The two upper attachment drive screws and the lower attachment bolt are shown by the arrows. The installation is shown on a left-hand-drive car, but the fitting is identical on right-hand-drive cars

(2) Disconnect the battery lead from the negative terminal.

(3) Slacken the two attachment clips for the top radiator hose and remove the base.

(4) Remove the two set bolts attaching the water outlet to the cylinder head and remove the outlet casting and joint gasket. Carefully clean the joint face.

(5) Remove the dynamo and fan assembly by unscrewing the three dynamo attachment bolts. Remove the fan blades from the dynamo pulley hub and remove the fan belt from the crankshaft pulley. Detach the front pulley flange with fan hub and replace with the hubless pulley flange from the kit. Carefully retighten the dynamo pulley retaining nut. Place the dynamo on the body member close to the dash.

(6) Release the hose clips from the radiator inlet at the base of the radiator and release the water inlet pipe casting from the cylinder block by removing its two set bolts. Remove the inlet hose assembly and clean the joint face.

(7) Remove the radiator by unscrewing the two set bolts on each side which attach it to the cowl assembly and withdrawing it vertically.

(8) Unscrew the four set bolts attaching the cover-plate to the front face of the cylinder block; remove the plate and carefully clean the joint face on the block.

(9) Remove the front passenger's seat to give ample working room.

(10) Remove the central rivet from the edge of the parcel tray and drill out the hole to ¼ in. (6·5 mm.) diameter.

(11) Release the parcel tray at each end by removing the Phillips screws.

(12) In the case of the two-door Saloon and Convertible models it is necessary to fit the two demister ducts to the fascia panel from the under side by passing the two attachment tongues through the deflector openings underneath the rubber windscreen surround, with the tongues on top of the fascia. With the help of an assistant, hold back the lip of the surround and insert the drive screws (Part No. 8463) through the tongues into the holes already drilled in the fascia, using a well-fitting screwdriver to tighten the screws. (The ducts are a standard fitment on four-door models.)

(13) Fit the demister air hoses to the demister ducts under the fascia panel by pushing them onto the ducts. They are a sufficiently tight fit not to require any special retaining precautions. The short hose should be fitted to the right-hand duct and the long one to the left-hand duct. Fitting will be facilitated by rotating the hose in the direction which tends to unwind the spiral armour wire while the hoses are pushed into position.

Fit the two-way adaptor to the lower ends of the demister hoses, taking care that both are behind the wiring loom at the back of the control panel.

(14) Fit the two flexible rubber hoses to the heater inlet and outlet pipes, fitting the longer one (Part No. 181743) to the left-hand swan-neck and the

short one (Part No. 181742) to the right-hand swan neck, using clips (Part No. 97428).

(15) Remove the two rubber blanking grommets from the dash next to the starter switch and fit the two replacement grommets (Part No. 300391) in their place.

(16) Place the heater unit on the floor of the car and feed the two hoses through the grommets in the dash, remembering to pass them over the instrument panel support bracket and that the longer hose should go through the upper grommet and over the starter control wire. Raise the heater into position under the control panel, feeding the hoses through the dash and the two-way adaptor into the heater outlet until the holes in the heater attachment bracket line up with the two holes in the lip of the control panel.

Insert the two drive screws provided into the panel and bracket holes and give them a sufficient number of turns to support the heater. Insert the bolt and the plain washer provided through the edge of the parcel tray and the bottom bracket of the heater, and fit the spring washer and nut in position. Tighten the bolt and the two drive screws and refit the Phillips screws at each end of the tray.

(17) Remove the front and rear right-hand cylinder head stud nuts and fit the copper water rail pipe in position with the pipe above the clips. Replace the cylinder head stud nuts and tighten them down firmly.

(18) Remove the large hexagon plug from the rear end of the cylinder head and remove the adjacent sparking plug for No. 4 cylinder. Screw the control valve into the cylinder head boss and tighten it down so that the hose connection is pointing to the right of the car, directly towards the ignition coil on the dash. This permits access to the cylinder head stud nut for attention when decarbonizing, etc., without disturbing the control valve. If difficulty is encountered in obtaining this position use should be made of one or both of the brass shims provided.

Refit the sparking plug.

(19) Couple the short hose to the rear end of the water rail with one of the hose clips provided, allowing the hose to pass under the battery box. Couple the end of the long hose to the control valve with one of the remaining hose clips.

(20) Fit the drain tap to the water drain cover, not forgetting the fibre seating washer, and fit the water drain cover to the cylinder block with the

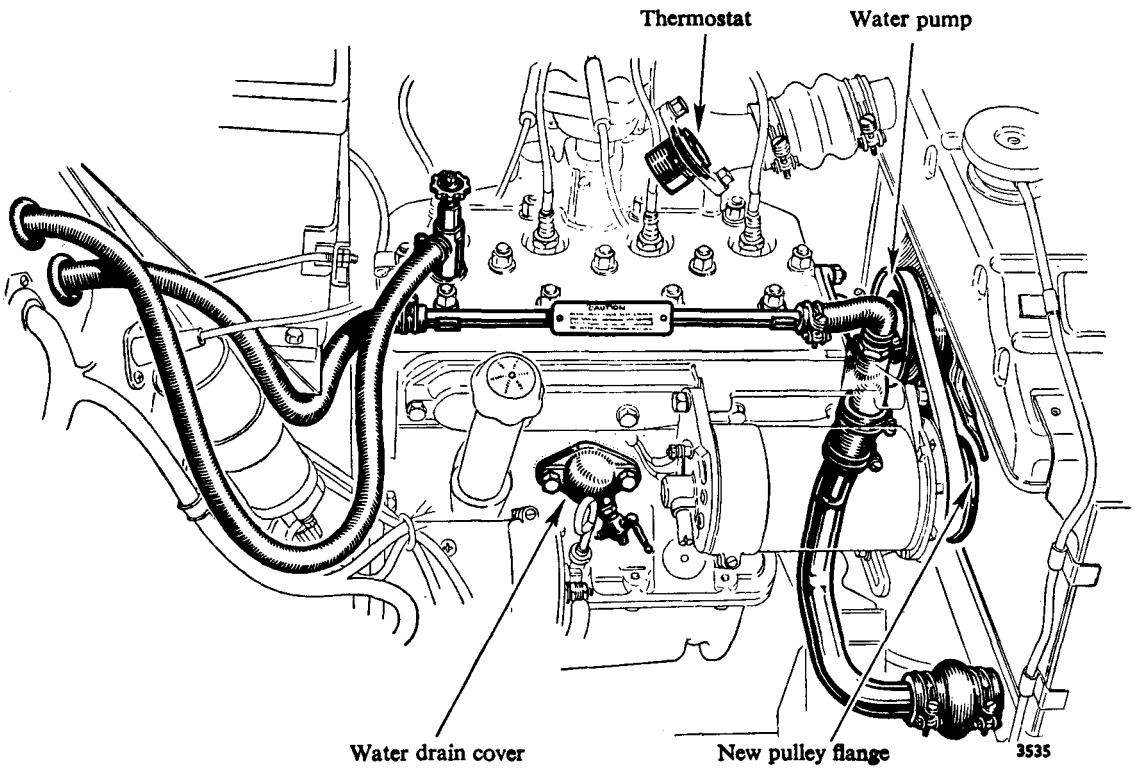

Fig. S.2

The components of the heater equipment fitted to the engine

joint gasket provided, using the two existing attachment bolts.

(21) Assemble the pump pulley and new fan blades to the pump, using the four set bolts from the dynamo fan hub and taking care to see that the blades are the right way round so as to draw the air through the radiator. Remove the hexagon-headed plug from the pump and assemble the pump union and tube to the pump, using the washer from the plug to make a water-tight joint. Fit the rubber hose elbow to the union tube loosely with the hose clip.

(22) Fit the water pump joint gasket over the spigot of the water pump and bolt the pump into position on the front of the cylinder block, using the bolts from the cover-plate. Do **not** make a proper joint with the water rail pipe at this stage.

(23) Fit the two hose connections to the connecting pipe with the two-diameter hose at the bottom end for connection to the radiator. Fit the pipe to the pump intake with the hose clip provided.

(24) Place the new belt over the pump and crankshaft pulleys.

(25) Replace the radiator and refit the four attachment bolts and spring washers, keeping the radiator as far forward as possible.

(26) Couple up the bottom hose to the radiator, using the original clip, and tighten all four clips.

(27) Fit the thermostat unit into the recess in the cylinder head water outlet and refit the outlet casting, using a new gasket. Refit the upper radiator hose.

(28) Replace the dynamo on the engine, engaging the pulley with the belt and fitting the two upper attachment bolts loosely.

(29) Fit the lower dynamo bolt through the slotted adjustment link and tighten all three bolts while pulling the dynamo outwards by hand to give the correct belt tension.

(30) Fit the two extension leads to the heater motor leads with the snap connectors and run the extension leads over the instrument support bracket, feeding them through the grommet in the dash through which passes the wiring loom.

(31) Connect one lead to the 'A4' terminal on the control box and the other to the adjacent 'E' terminal.

(32) See that both drain taps are closed (handles in line with the tap) and fill the cooling system with water, leaving the connection between the rubber pump elbow and the water rail still only temporarily connected.

(33) Refit the battery lead to the battery terminal, switch on the ignition, and start the engine, letting it run at a fast idling speed.

After the engine has run for a few minutes both the flexible rubber pipes leading to the heater should become warm, indicating that the water is circulating satisfactorily.

If one or both of the pipes do not warm up, this indicates an air lock in the heater circuit, which can be cleared by disconnecting the rubber pump elbow from the water rail, quickly sealing the end with a finger and getting an assistant to start up the engine. After a few moments water should flow from the water rail, when the elbow should be reconnected quickly.

(34) Tighten up the pump elbow hose clips, and replenish the water in the radiator if necessary. Replace the radiator filler cap.

(35) Switch on the heater motor (with the ignition switched on) and check that it is working.

The first few degrees of movement of the switch switches on the heater motor so that it runs at its maximum speed. Further movement of the switch reduces the speed of the motor to regulate the heating of the car.

As the speed of the motor is reduced it naturally reduces its noise level.

(36) The construction and installation position of the heater radiator does not permit it to be drained. It is therefore essential to use an anti-freeze in the coolant to counter the need for draining in cold weather.

Section S.2

COMPONENTS OF MORRIS MINOR CAR HEATER AND WATER PUMP KIT SET (Part No. 300553)

(For fitment to Engines Commencing at No. 77001 Only)

Part No.	*Description*	*No. off*
SA 3115/4	Water pump assembly with pulley	1
X 31662	Fan blade	1
X 31663	Fan blade—offset	1
X 31653	Water drain cover	1
163129	Water drain tap	1
JA 5411	Water drain tap washer	1
164421	Thermostat	1
164137	Joint	1
X 31666	Belt for dynamo and fan	1
162531	Dynamo pulley—front half	1
X 31657	Water pump joint	1
X 15582	Water inlet pipe joint	1
181743	Hose—pump (long)	1
181742	Hose—lower (short)	1
181746	Connecting pipe—inlet	1
98099	Hose clips	2
95621	Hose clip	1
181983	Union and tube assembly	1
181982	Elbow—water rail to pump	1
181987	Pipe rail assembly (early type)	1
183785	Pipe rail assembly (from Tourer No. 132749, 4-door No. 132583, and 2-door No. 132634)	1
97428	Clips—hose	6
181980	Pipe—flexible	1
181981	Pipe—flexible	1
180204	Demister duct—R.H.	1
180205	Demister duct—L.H.	1
8463	Demister duct drive screws	4
181988	Control valve	1
135435	Shim—·014 in.	1
135434	Shim—·028 in.	1
182600	Heater kit	1
	NOTE.—Heater kit (Part No. 182600) comprises the following:	
300383	Heater—complete with brackets	1
593 E 2	Fixing screws	2
300390	Two-way adaptor	1
300391	Rubber grommets	2
182078	Demister air hose—10 in.	1
182079	Demister air hose—7 in.	1
181216	Instruction plate	1
236 B 2	Bottom screw	1
PW 012 Z	Washer—plain	1
SW 012 Z	Washer—spring	1
200 A 2	Nut	1
	Leads for heater motor	2

SECTION SS

THE HEATER

OF THE MORRIS MINOR (Series II) AND MORRIS MINOR 1000

DESCRIPTION

The car heater is fitted centrally between the parcel tray and control panel and incorporates the motor and control switch.

Section SS.1

TO FIT THE HEATER

(1) Drain the water from the radiator by opening the tap at the base of the radiator and removing the filler cap, remembering to collect the water for re-use if it contains anti-freeze mixture.

(2) Disconnect the battery lead from the negative terminal.

(3) Remove the front passenger's seat to give ample working room.

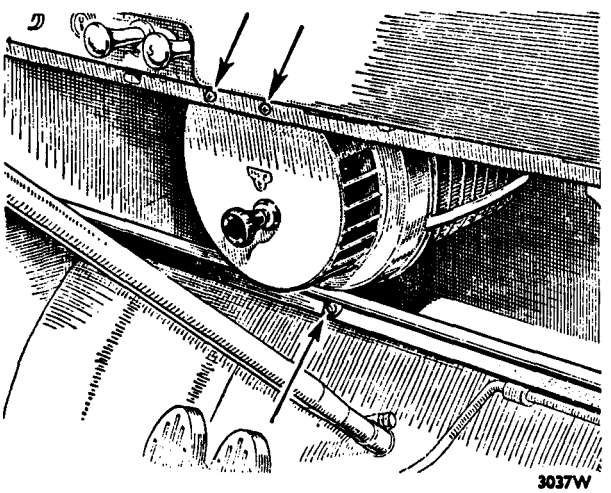

Fig. SS.1

The heater is fitted centrally between the control panel and the parcel tray, as indicated. The two upper attachment drive screws and the lower attachment screw are shown by the arrows. The installation is shown on a left-hand-drive car, but the fitting is identical on right-hand-drive cars

(4) Remove the central rivet from the edge of the parcel tray and drill out the hole to ¼ in. (6·5 mm.) diameter.

(5) Release the parcel tray at each end by removing the screws.

Remove the right- and left-hand gloveboxes by undoing the five screws.

Fit the two demister ducts to the fascia panel from the under side by passing the two attachment tongues through the deflector openings underneath the rubber windscreen surround, with the tongues on top of the fascia. With the help of an assistant, hold back the lip of the surround and insert the drive screws through the tongues into the holes already drilled in the fascia, using a well-fitting screwdriver to tighten the screws. On later models it will be necessary to drill the holes in the fascia, taking care not to scratch the windscreen glass.

(6) Fit the demister air hoses to the demister ducts under the fascia panel by pushing them onto the ducts. They are a sufficiently tight fit not to require any special retaining precautions. The short hose should be fitted to the right-hand duct and the long hose to the left-hand duct. Fitting will be facilitated by rotating the hose in the direction which tends to unwind the spiral armour wire while the hoses are pushed into position.

Fit the two-way adaptor to the lower ends of the demister hoses, taking care that both are behind the wiring loom at the back of the control panel.

(7) Fit the two flexible rubber pipes to the heater inlet and outlet pipes, fitting the outlet hose to the left-hand swan-neck and the inlet hose to the right-hand swan-neck, using clips.

(8) Remove the two rubber blanking grommets from the dash next to the starter switch and fit the two replacement grommets in their place.

(9) Place the heater unit on the floor of the car and feed the two hoses through the grommets in the dash, remembering to pass them over the instrument panel support bracket and the inlet hose through the upper grommet and over the starter control wire. Raise the heater into position under the control panel, feeding the hoses through the dash and adjusting the two-way adaptor into the heater outlet until the holes in the heater attachment bracket line up with the two holes in the lip of the control panel.

Insert the drive screws provided into the panel and bracket holes and give them a sufficient number of turns to support the heater. Insert the screw and the plain washer provided through the edge of the parcel tray and the bottom bracket of the heater, and fit the spring washer and nut in position. Tighten the screw and the two drive screws and refit the screws at each end of the tray.

(10) Remove the blanking plate from the rear right-hand end of the cylinder head. Screw the control valve into the adaptor plate and secure the plate, using a new joint seal to the cylinder head. The

hose connection should point to the right of the car. This permits access to the cylinder head stud nut for attention when decarbonizing, etc., without disturbing the control valve. If difficulty is encountered in obtaining this position use should be made of one or both of the brass shims provided.

(11) Fit the two hose retaining clips provided. One fits in the hole on the dash cross-member adjacent to the main harness clip and the other in the hole provided in the right horizontal tie-plate, to the rear of the front engine bearer bracket. Eliminate any tendency of the hoses to foul the throttle control cable guide on the dash cross-member.

(12) Couple the inlet hose to the control valve, having shortened it as necessary, with one of the hose clips provided, allowing the hose to pass under the battery box.

(17) See that both drain taps are closed and fill the cooling system with water.

(18) Refit the battery lead to the battery terminal, switch on the ignition, and start the engine, letting it run at a fast idling speed.

After the engine has run for a few minutes both the flexible rubber pipes leading to the heater should become warm, indicating that the water is circulating satisfactorily.

If one or both of the pipes do not warm up this indicates an air lock in the heater circuit, which can be cleared by disconnecting the long rubber hose from the bottom of the radiator, quickly plugging the radiator connection, and getting an assistant to start up the engine. After a few moments water should flow from the long hose, which should be reconnected quickly and the hose clip tightened.

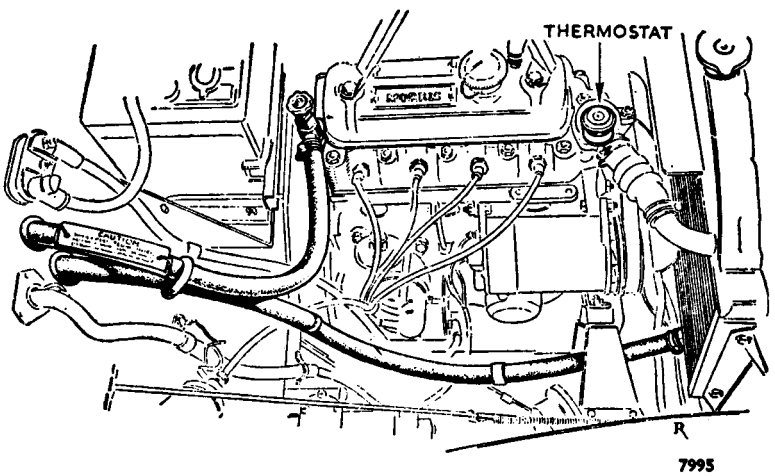

Fig. SS.2

The components of the heater equipment fitted to the engine

(13) Remove the large hexagon plug from the bottom right-hand side of the radiator. Insert the brass connector supplied. Feed the outlet hose through the engine bearer bracket and secure to the connector with the remaining clip. Press the hose into the clips fitted to the dash and tie-plate.

(14) Remove the thermostat housing cover. Replace the existing thermostat (72° C. opening temperature) by the thermostat (80 to 85° C. opening temperature) supplied, using a new joint.

(15) Fit the two extension leads to the heater motor leads with the snap connectors and run the extension leads over the instrument support bracket, feeding them through the grommet in the dash through which passes the wiring loom.

(16) Connect one lead to the 'A4' terminal on the fusebox and the other to the 'E' terminal on the control box.

(19) Replenish the water in the radiator if necessary and replace the radiator filler cap.

(20) Switch on the heater motor (with the ignition switched on) and check that it is working.

The first few degrees of movement of the switch switches on the heater motor so that it runs at its maximum speed. Further movement of the switch reduces the speed of the motor to regulate the heating of the car.

As the speed of the motor is reduced it naturally reduces its noise level.

The construction and installation position of the heater radiator does not permit it to be drained. It is therefore essential to use an anti-freeze in the coolant to obviate the need for draining in cold weather.

(21) Secure the instruction plate between the rubber ring on the hose pipes and the dash cross-member.

Section SS.2

MODIFIED DEMISTER HOSE

Instances have occurred in which the speedometer cable has broken due to pressure by the left-hand demister hose on the outer casing. The cause can be eliminated by fitting a longer hose.

Unscrew the instrument retaining screws, which are accessible through holes in the gloveboxes, withdraw the instrument a sufficient amount, and disconnect the speedometer cable.

Remove the left-hand demister air hose and fit the new air hose (Part No. ADA 1682), which is 14 in. (35·5 cm.) in length. **The speedometer cable must pass beneath the air hose.**

Reconnect the speedometer cable and replace the instrument.

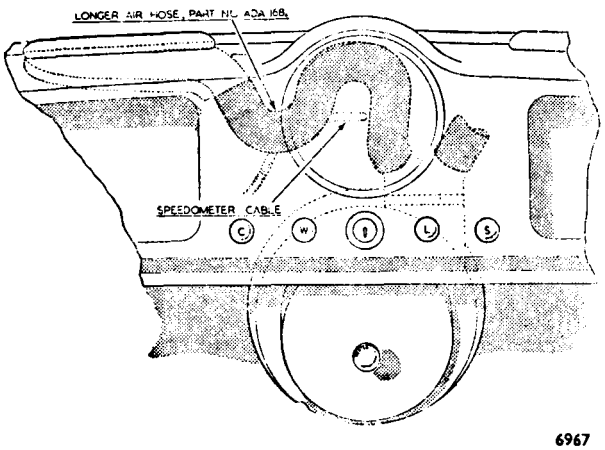

Fig. SS.3

When fitting the long demister hose ensure that it passes above the speedometer drive cable as shown here

Section SS.3

FITTING THE HEATER FRESH-AIR CONVERSION KIT

It is possible to convert an original recirculatory type of heater fitted to a Minor (Series II) or to a Minor 1000 into a fresh-air type with the aid of a conversion kit, Part No. 8G 9046. Components are supplied in the kit for fitting air ducting around the heater unit, making provision for the fresh-air inlet, and for improving the efficiency of the water circulation in the heater system. All these modifications are incorporated on the heater assemblies fitted to the de-luxe versions of later Minor 1000 cars.

NOTE.—The numbers referred to in the text of this Section are to be found in the illustration on page SS.5.

Proceed as follows to fit the conversion kit.

Drain the cooling system, collecting the water for re-use if it contains anti-freeze mixture.

Disconnect a battery lead.

Remove both the front seats and the carpets to give ample working room. Undo the snap connectors from the horn and indicator assembly wires beneath the fascia and draw the wires through the hole in the fascia. In the case of Minor (Series II) cars disconnect the horn wire from the slip-ring contact brush terminal. Remove the steering-column clamp and the pinion clamping nut and bolt. Disengage the column assembly from the pinion splines and lift it from the car.

Remove the parcel tray by extracting the two side securing screws and the eight fixing rivets and flat washers. Cut a portion from the centre of the parcel tray at the rear to the following dimensions: 8 in. (20·32 cm.) in depth from the rear and $6\frac{7}{16}$ in. (16·35 cm.) in over-all width, i.e. $3\frac{7}{32}$ in. (8·18 cm.) each side of the centre-line.

With Minor 1000 cars after Car No. 654750 remove the blanking plate in the centre of the floor panel below the parcel tray by extracting the fixing screws.

On L.H.D. models disconnect the two accelerator pedal fixing brackets and remove the assembly.

On earlier Minor 1000 cars and all Minor (Series II) cars there is no air aperture cut in the floor. Use the left-hand accelerator bracket tapped hole (L.H.D. models) or the tapped hole provided (R.H.D. models) as a location for the left-hand hole in the fresh-air duct sealing gasket and place the sealing gasket in position. Mark out the area within the gasket and cut out the metal enclosed within the marking from the floor panel. Replace the accelerator pedal assembly, using the right-hand fixing screw only (L.H.D. models). Fix the sealing gasket in position with Dunlop Adhesive S758.

Remove the right- and left-hand gloveboxes by withdrawing their fixing screws.

Disconnect the heater inlet hose from the control valve on the cylinder head and the outlet hose from the connector in the bottom tank of the radiator. Disconnect and remove the heater unit from the car, pulling the hoses through the bulkhead. Remove the demister hoses from the demister ducts. Fit the long demister hose (20) supplied in the kit to the left-hand demister duct and the short hose (21) to the right-hand duct. Fit the new two-way adaptor (7) to the demister hoses.

Fit the circular foam seal to the rear side edge of the heater unit, using Dunlop Adhesive S758. Fit the two foam sealing strips to the front lips of the top heater case assembly (2) and the bottom heater case assembly (3),

THE HEATER FRESH-AIR CONVERSION KIT
Part No. 8G 9046

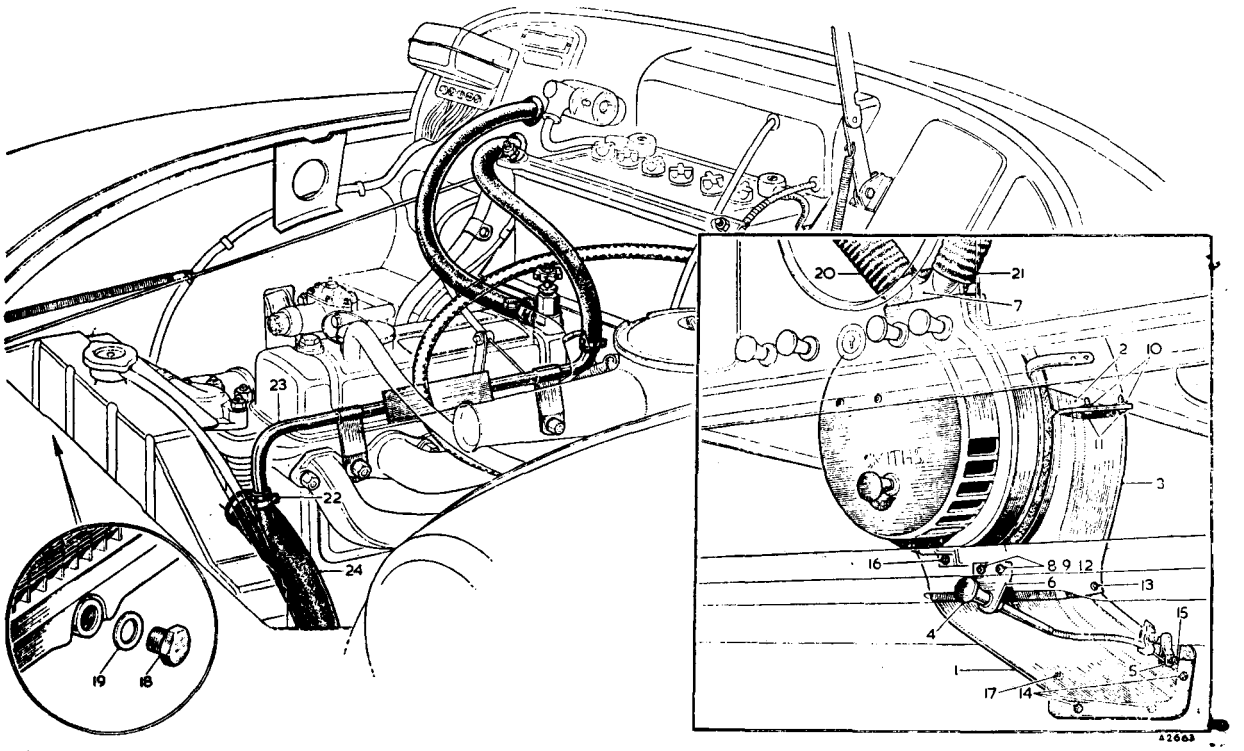

Illus. No.	Part No.	Description	No. off	Illus. No.	Part No.	Description	No. off
1	ADA 3532	Extension cover assembly ..	1	12	PMZ 0308	Screw—control to fascia shelf..	2
2	ADA 3533	Heater case—top	1	13	PTZ 603	Screw—extension to bottom case	3
3	ADA 3534	Heater case—bottom	1	14	PTZ 1004	Screw—extension to floor ..	3
4	ADA 3598	Air flow control	1	15	53K 1016	Screw—trunnion	1
—	ADA 3536	Seal—heater to case—top and bottom	2	16	PTZ 1006	Screw—heater to bottom case..	1
				—	BRP 1108	Rivet	8
—	ADA 3537	Seal—heater to case	1	—	AJD 7112	Washer	12
5	ADA 3538	Trunnion	1	17	AJD 1446 PP	Screw—extension to floor ..	1
6	ADA 3539	Bracket—air control	1				
—	ADA 3565	Seal—extension to floor ..	1	18	ARA 615	Radiator plug	1
7	ADA 3644	Hose adaptor—demister ..	1	19	ARA 616	Washer—radiator plug.. ..	1
8	FNZ 103	Nut—control to fascia shelf ..	2	20	ADA 2637	Hose—demister (6½ in. long) ..	1
9	LWZ 203	Washer—control to fascia shelf	2	21	BCA 4171	Hose—demister (3¾ in. long) ..	1
10	PFS 210	Spring nut—heater case—top to bottom	4	22	ACA 5119	Clip—hose	1
				23	ACA 5514	Outlet pipe	1
11	PJZ 1004	Screw—heater case—top to bottom	4	24	ACA 5513	Hose—bottom—three-way ..	1

using Dunlop Adhesive S758. The top heater case can be identified by two locating clips on its forward edge, and the bottom case by a right-angle fixing bracket on its front side. Fit the heater case assemblies to the heater unit, taking care not to damage the seals. Place the four spring nuts (10) over the fixing holes in the top case. Secure the two cases to each other, using the four screws (11). When assembling the two cases to the heater unit the clips on the forward edge of the top lip should be located in the recess of the heater front cover. The fixing bracket of the heater bottom case should be in line with the bracket at the bottom of the heater front cover. Insert the screw (16) into the bottom fixing bracket.

Fit the heater extension assembly (1) to the heater bottom case but do not secure with screws until the assembly has been installed in the car.

Fit the heater assembly to the car, passing the inlet hose through the top hole in the bulkhead and the outlet hose through the bottom hole. Fit the demister hose two-way adaptor (7) to the heater unit. Attach the heater assembly to the fascia rail, leaving the two fixing screws slack. Align the left-hand hole in the bottom of the heater extension (1) with the tapped hole in the floor panel and insert the screw (17). Tighten the top fixing screws in the fascia rail. Drill through the floor, using the three remaining fixing holes in the bottom of the extension cover as a guide, and then fasten the extension firmly to the floor, using the self-tapping screws (14). Using the holes already provided in the bottom heater case as a guide, drill through into the extension and fit the three self-tapping screws (13).

Remove the existing bottom water hose and fit the new hose supplied (24). Remove the second and fifth manifold stud nuts and fit the outlet pipe assembly (23) over the studs connecting it to the bottom hose with hose clip (22). Refit the manifold nuts. Place two grommets over the heater hoses and locate them in the bulkhead. Connect the inlet (top) hose to the control valve and the outlet (bottom) hose to the outlet pipe assembly. It will be necessary to shorten this hose. Fit the instruction plate to the water hose in a convenient position near the bulkhead. Remove the radiator adaptor from the bottom of the radiator and fit the blanking plug (18) supplied with its washer (19). Making certain that both drain taps are closed, refill the cooling system, using additional anti-freeze mixture where required. Check for water leaks.

Pass the two electrical cables from the heater through the main harness cable ferrule. Connect one lead to the 'A4' terminal and the other to the 'E' terminal on the control box.

Refit the parcel tray, using new bifurcated rivets and washers supplied in the kit as required.

Refit the steering-column assembly, ensuring that the slot in the steering-column clamp coincides with the mark on the end of the pinion. The mark is at bottom dead centre when the wheels are in their straight-ahead position. Refit the clamp bolt and the column support bracket. Where a self-cancelling direction indicator switch is installed make certain that the indicator trip cancels correctly.

Fit the air control assembly (4) to the air control bracket (6). Place the assembly under the parcel tray directly in line with the air flap operating lever. Drill two holes, using the bracket holes as a guide. Secure the bracket to the parcel tray with two screws (12), nuts (8), and spring washers (9). Fit the trunnion (5) to the air flap lever and pass the inner cable through. Clamp the outer cable to the extension with the clamp provided. Adjust the cable length and secure it in the trunnion with the screw (15).

Refit the gloveboxes and the seats. Cut the carpets as required around the heater extension and reposition the carpet fasteners, drilling new holes to suit.

Reconnect the battery lead and start the engine. If the heater fails to warm up an air lock is present in the system. In the event of this happening, switch off the engine and remove the hose from the outlet pipe assembly. Extend the rubber hose by some temporary means so that water will flow back into the radiator through the filler neck. Plug the outlet pipe temporarily. Start the engine and allow it to run at a fast idling speed. Watch the water flow back into the radiator. When this is smooth and bubble-free reconnect the hose to the outlet pipe and tighten the clip as quickly as possible. Top up the radiator.

Section SS.4

FITTING A HEATER AND FRESH-AIR INTAKE

To fit a fresh-air type of heater to a car which has previously had no heating equipment it is necessary to fit the components supplied in heater kit (Part No. 301153) and heater fresh-air conversion kit (Part No. 8G 9046) simultaneously.

When fitting the components of both kits follow the instructions given in Section SS.1, but note that the following additional operations must be carried out:

(1) Remove the floor carpets.
(2) Remove the steering-column assembly as described in Section SS.3.
(3) Having removed the parcel tray, cut out a portion from it to the dimensions detailed in Section SS.3.
(4) Fit the demister hoses and two-way adaptor supplied in the fresh-air conversion kit (Part No. 8G 9046). Do not use the similar parts supplied in the heater kit (Part No. 301153).
(5) Remove the blanking plate in the centre of the floor panel or, in the case of earlier Minor 1000

COMPONENTS OF THE MORRIS MINOR (Series II) CAR HEATER KIT (Part No. 301153)

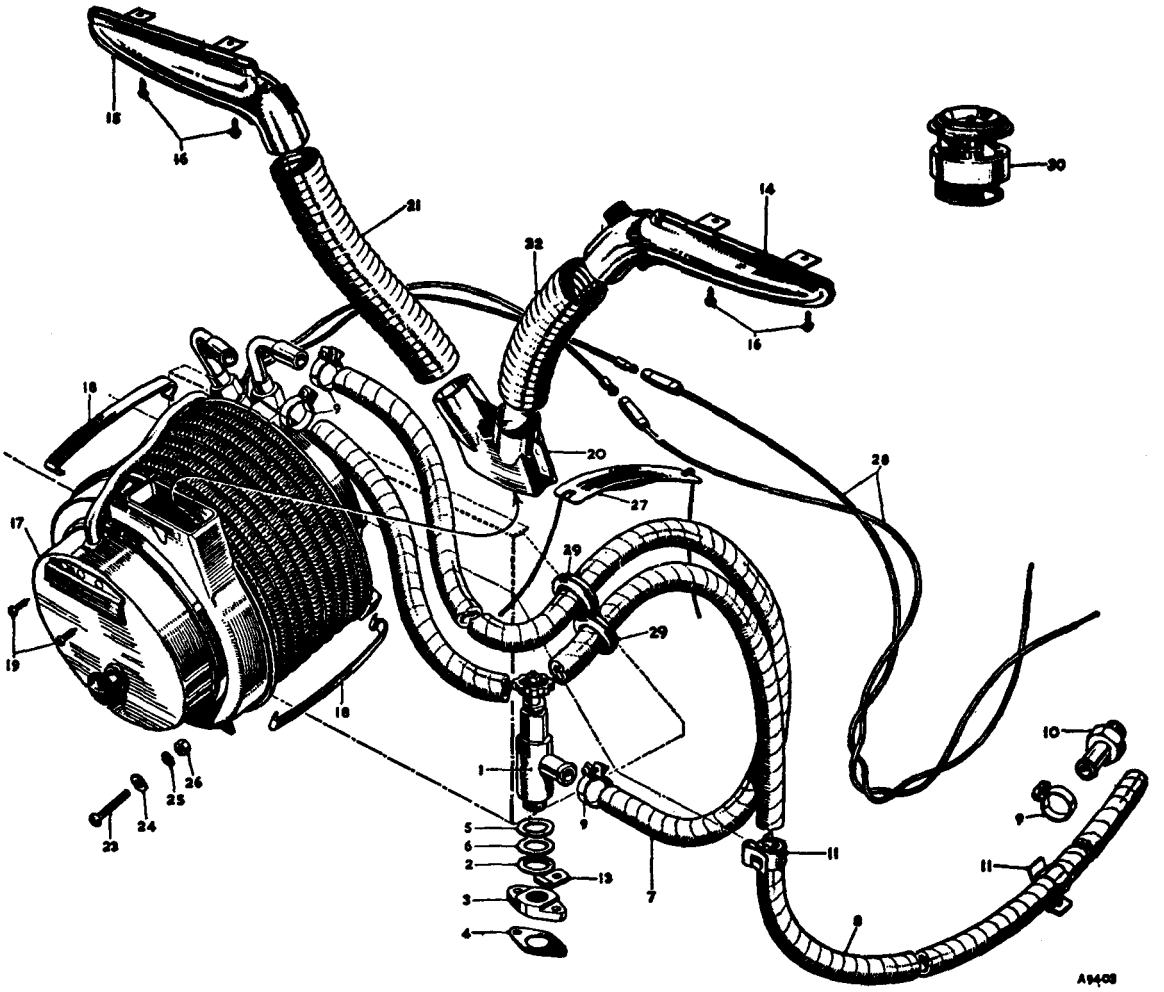

Illus. No.	Part No.	Description	No. off	Illus. No.	Part No.	Description	No. off
1	13H 100	Control valve	1	17	ADA 1813	Heater—complete with brackets	1
2	98555	Washer—valve joint	1	18	27H 396	Heater grille securing clip ..	3
3	ACA 5456	Adaptor plate—control valve ..	1	19	PTZ 603	Fixing screw—top	2
4	2A 179	Joint seal	1	20	ADA 2636	Two-way adaptor	1
5	ACA 5173	Shim—·014 in.	1	21	ADA 2637	Demister air hose—L.H. ..	1
6	ACA 5172	Shim—·028 in.	1	22	BCA 4171	Demister air hose—R.H. ..	1
7	ACA 8010	Inlet pipe	1	23	PMZ 0312	Fixing screw—bottom	1
8	ACA 8010	Outlet pipe	1	24	PWZ 203	Washer—plain	1
9	ACA 5119	Pipe clip	4	25	LWZ 203	Washer—spring	1
10	181983	Water pipe connector to radiator	1	26	FNZ 103	2 B.A. hexagon nut	1
11	184673	Clip—hoses to tie-plate and dash cross-member..	2	27	ACB 8437	Instruction plate	1
13	ACH 9009	Pipe clip—carburetter control..	1	28	185494	Electrical wire—complete with snap connector	2
14	180204	Demister duct—R.H.	1	29	300391	Rubber grommet	2
15	180205	Demister duct—L.H.	1	30	11G 292	Thermostat	1
16	AJD 8152 Z	Demister duct drive screws ..	4				

cars and all Minor (Series II) cars, cut a hole in the floor panel, using the method described in Section SS.3.

(6) Fit the top and bottom casings and the fresh-air extension supplied in the conversion kit to the heater unit before fitting the heater assembly to the car. To do this follow instructions given in Section SS.3 and secure the complete assembly in the car in the manner described.

(7) Use the components supplied in the conversion kit for the heater water outlet as this will give increased heating efficiency. Shorten the outlet hose as necessary and follow the instructions for installation given in Section SS.3.

(8) Refit the steering-column in the way described in Section SS.3.

(9) Fit the fresh-air control assembly, using the method described in Section SS.3.

(10) Refit the carpets, cutting them as necessary around the heater extension and repositioning the carpet fasteners.

Section SS.5

FITTING THE HEATER MASKING KIT

When fitting a heater assembly to later Minor 1000 cars equipped with the deeper parcel tray and numbered from 695736 and 693589 (Traveller) it will be necessary to fit the extra parts supplied in the heater masking kit (Part No. 8G 9051). The purpose of the heater mask is to deflect the flow of air through an aperture in the parcel tray.

The procedure for fitting the components of the heater masking kit is as follows.

Disconnect and remove the battery. Lift out the battery board.

Remove the eight bifurcated rivets and one self-tapping screw (inside the car) securing the parcel tray to the bulkhead. Extract the two Phillips-headed screws holding the parcel tray to the side panels. Withdraw the parcel tray assembly carefully and place it on a clean surface.

Cut out the aperture and the fixing holes for the heater mask which are already marked out on the parcel tray. Fit the mask assembly to the top of the parcel tray, using the clamping plates and screws provided.

Fit the clip to the centre of the top inner face of the mask assembly with the scroll portion facing outwards. Secure the clip with the rivets and washers provided.

Remove the heater control knob and place the parcel tray and heater mask into position with the clip resting behind the lower flange of the fascia.

Refit the heater control knob and refasten the parcel tray to the bulkhead and side panels.

Replace the battery board and the battery. Reconnect the battery terminals.

HEATER MASKING KIT
(Part No. 8G 9051)

Part No.	*Description*	*No. off*
ADA 3597	Heater mask assembly	1
ADA 3592	Heater clamping plate—front ..	1
ADA 3588	Heater clamping plate—rear ..	1
ADA 3587	Clip—mask	1
BRP 1106	Rivet	2
PMZ 0306	Screw	5
PWZ 103	Washer	5
LWZ 203	Washer	5
FNZ 103	Nut	5

Section SS.6

FITTING A LATER-TYPE HEATER AND FRESH-AIR INTAKE

The heater is mounted below the fascia and fresh-air is drawn in by an integral blower from an intake at the front of the car. The water supply is tapped from the rear of the cylinder head and returned to the radiator via the bottom hose.

NOTE.—The numbers referred to in the text of this Section are to be found in Figs. SS.4 to SS.7.

Proceed as follows to fit the heater.

Drain the cooling system, collecting the water for re-use if it contains anti-freeze mixture.

Disconnect a battery lead.

Position the demist nozzles (25) and (26) against the slots in the fascia panel, mark the position of the fixing holes and drill a $\frac{3}{16}$-in. (4·76-mm.) hole. Secure the nozzles with four screws (29) and clip nuts (30). Push the demist hoses (17) over the nozzles.

Remove the parcel shelf and fit grommet (16) to the large diameter hole in the bulkhead. Remove the blind grommets from the holes in the bulkhead and fit grommets (31). On earlier cars move the ashtray to a position 6 in. (152·4 mm.) farther towards the left-hand side of the car

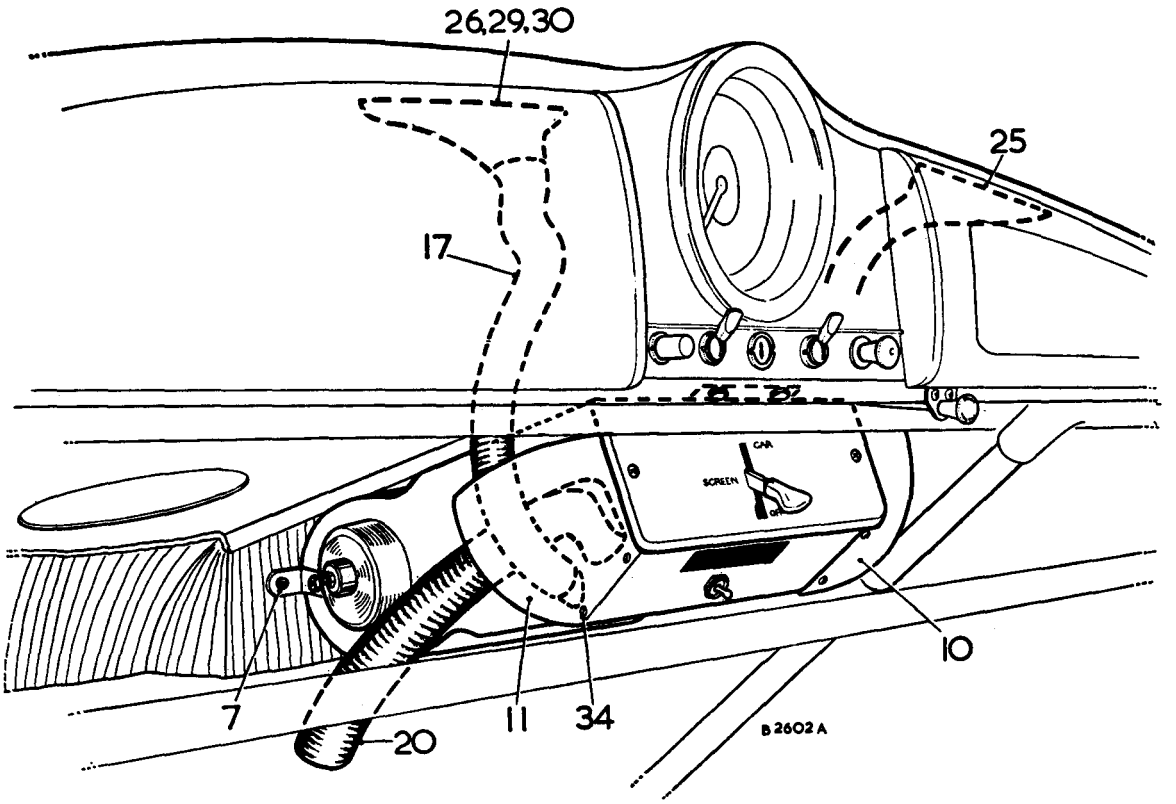

Fig. SS.4

and move the windshield washer plunger to a point 8½ in. (216 mm.) from the centre of the car.

Push the large diameter air hose (12) over the heater air intake (Fig. SS.6) and secure it with a clip. Push the water hose (18) over the upper heater pipe, and the water hose (24) over the lower heater pipe and secure both hoses with clips (32). Assemble the mounting brackets (7) to the studs projecting from the heater side cover (Fig. SS.4) using the nuts and washers provided.

Position the heater below the fascia panel (see Figs. SS.4 and SS.6), bending the lip of the fascia forward to clear the heater panel and push the air and water hoses through the bulkhead grommets. Loosely fix the heater in position using No. 10 screws, plain washers, spring washers, and nuts (3), (4), (5), and (6), and secure the heater mounting brackets (7) to the weld-studs projecting from the battery box using nuts and spring washers (9) and (8).

Push the hoses (17) from the demist nozzles over the demist outlets on the heater. Push the short hoses (20) over the moulded offtakes on the shrouds (10) and (11) and assemble the shrouds to the heater using four screws (34).

Refix the parcel shelf in such a position that the front edge is lowered by ⅞ in. (22 mm.) and wedge it with the two packing pieces (1) supplied.

Clip the two water hoses together with rubber clip (19).

Remove the horn and windshield washer bottle from the right-hand-side wing valance and reposition them (see Fig. SS.7). Slide cleats (14) along the large air hose (12), push the end of the hose over the intake ring adjacent to the radiator, secure the cleats with screws (15), and clip the hose to the intake ring with a clip.

Remove the blanking plate from the rear of the cylinder head and replace it by the adaptor plate (27) and heater valve (21) using shims (35) and (36) to ensure that the valve outlet is correctly aligned (see Fig. SS.5).

On later cars, a heater valve (37) with fascia control is fitted and the adaptor plate (27) and shims (35) and (36) are not required.

There are two $\frac{7}{32}$-in. (5·5-mm.) holes in the lip of the fascia to receive the heater valve control cable bracket screws which together with their washers and nuts secure the bracket (38). Remove the blind grommet from the

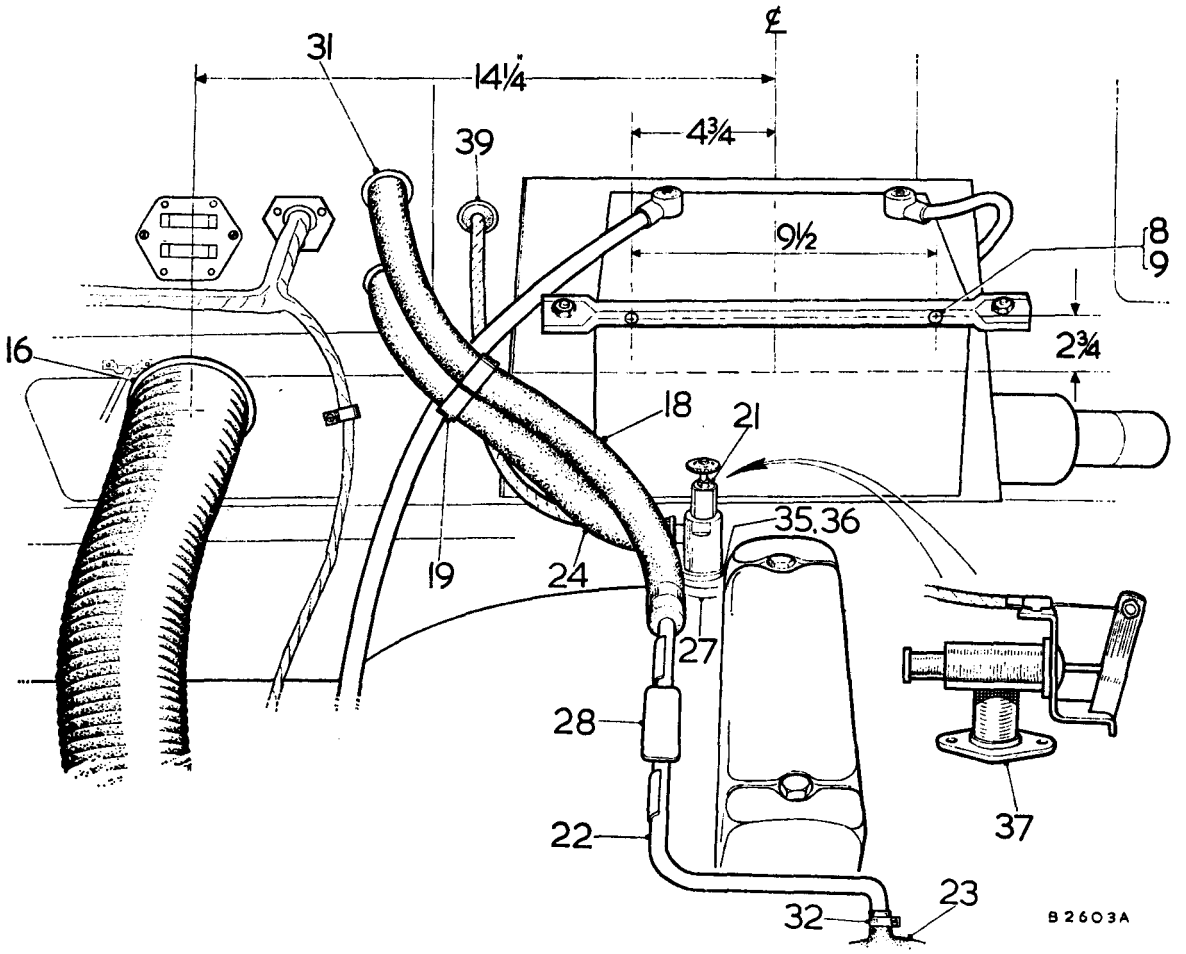

Fig. SS.5

hole in the bulkhead beneath the choke control cable and fit grommet (39). Feed the heater valve control cable through the bracket (38), placing the washer and nut loosely over it, and through the bulkhead grommet. Tighten the control cable casing against the fascia bracket (38) with the washer and nut, previously left loose on the cable, and clamp the other end of the control cable casing onto the heater valve body. Secure the control cable to the heater valve (37) with the control knob on the fascia pushed in and the valve (37) set in the outer (open) position.

Assemble the water return pipe (22) to the manifold securing studs on earlier cars and to the cylinder head studs on later cars.

Fit the lower radiator hose (23) supplied and discard the old one and then push the end of the return pipe into the moulded offtake and secure with a clip (32). Push the water hose (24) from the lower heater radiator pipe over the heater valve outlet and secure it with a clip (32). Push the hose from the upper water pipe (18) over the return pipe and secure it with a clip (32). Clip the 'Caution' label (28) to the return pipe.

Plug one lead (snap connector) from the heater into one of the two snap connector sockets in the green lead of the harness behind the fascia. Cut the Lucar connector from the second lead, bare its end, and connect it to the earth side of the wiper switch.

Refill the cooling system, reconnect the battery lead, and then start the engine and run it at a fast idling speed. If the heater return hose does not warm up within a few minutes an air lock may be present in the system and to clear it the procedure is as follows.

Switch off the engine, remove the hose from the return pipe, and extend it with a temporary hose so that the water will flow back into the radiator; temporarily plug the return pipe. Start the engine and note the water flow into the radiator; when this is smooth and bubble free, remake the hose to return pipe connection and tighten as quickly as possible.

NOTE.—The construction and installation position of

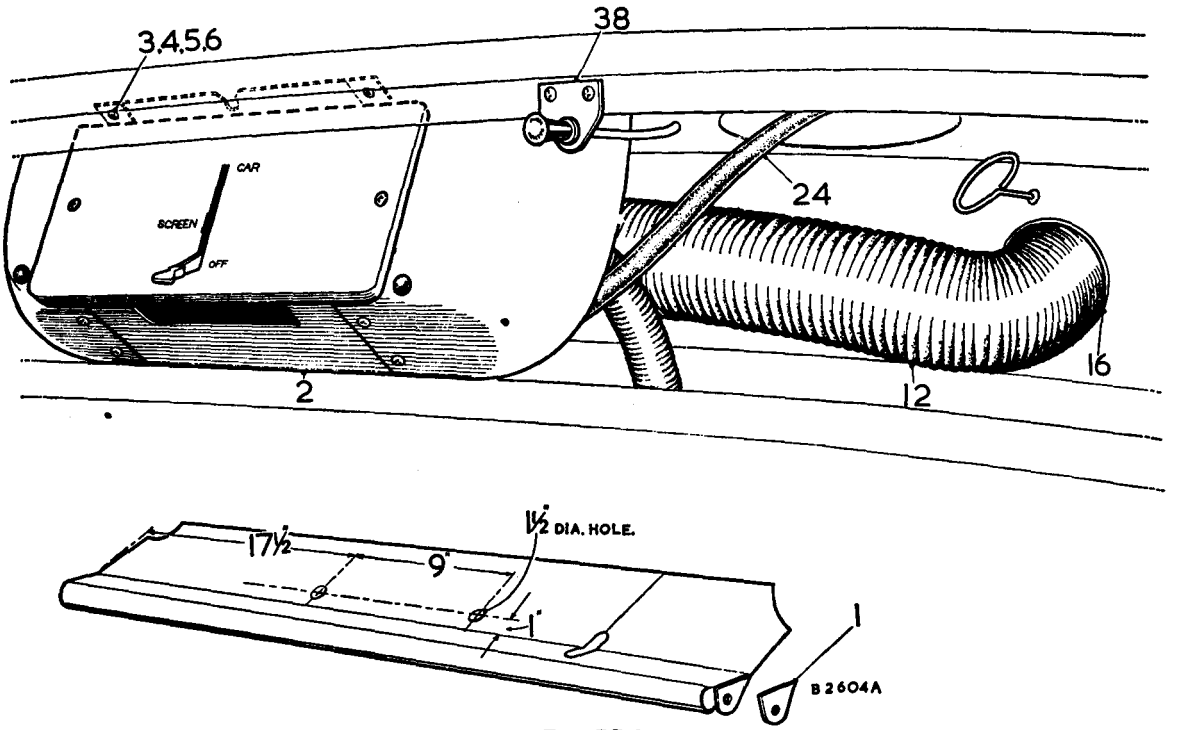

Fig. SS.6

the heater does not permit it to be completely drained; therefore in cold weather it is recommended that an anti-freeze conforming to B.S.3151 or B.S.3152 should be used in the coolant.

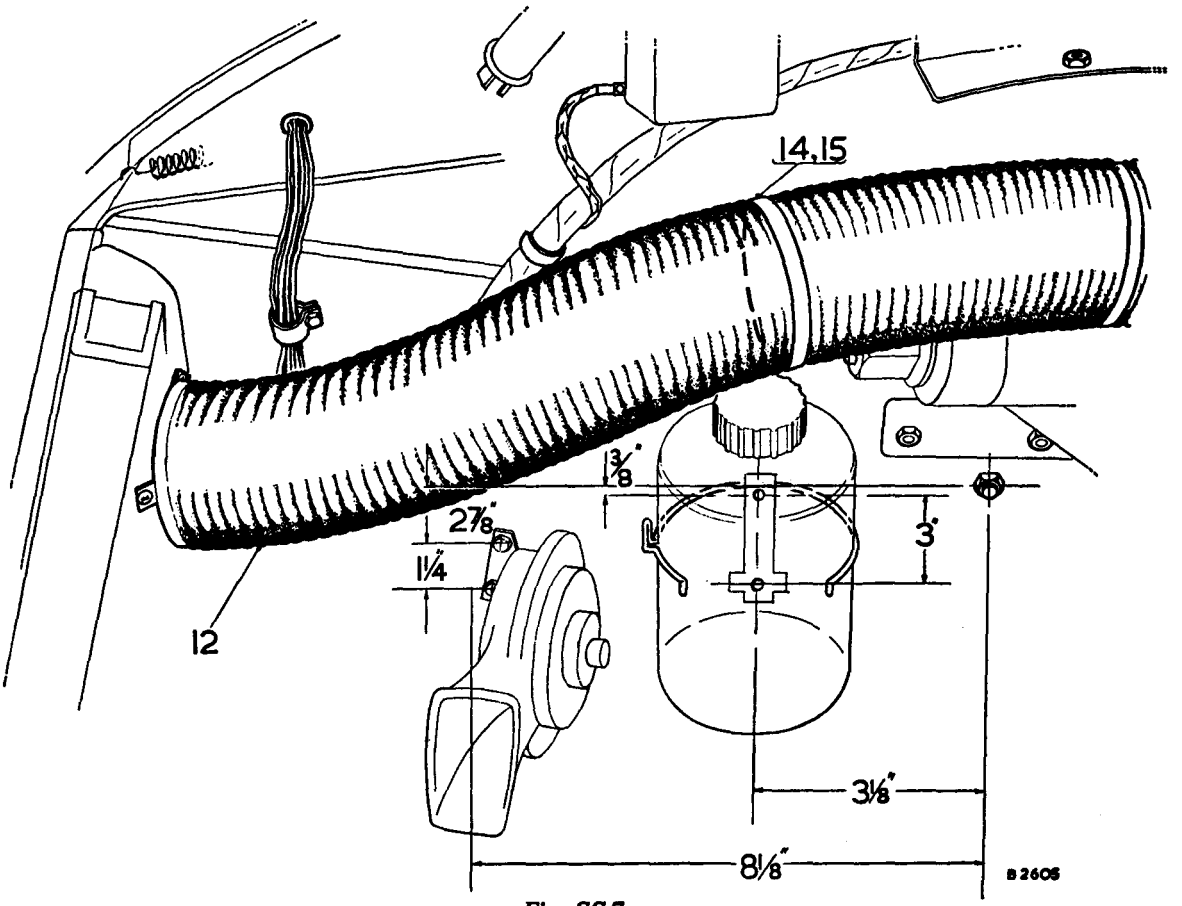

Fig. SS.7

SECTION T

SPECIAL REPAIRS AND MODIFICATIONS

Section T.1

SECURING LOOSE BAFFLES IN THE SILENCER (Series II)

When rattle is experienced in the exhaust system it should first be ascertained that no part of the system approaches near enough to any part of the body to make contact, allowing for movement of the engine in its supports and for the flexibility of the mounting of the exhaust pipe.

After checking this point, if rattles still exist, four holes should be drilled in the silencer as shown in Fig. T.1. These holes can then be used to secure both baffles by means of plug-welding.

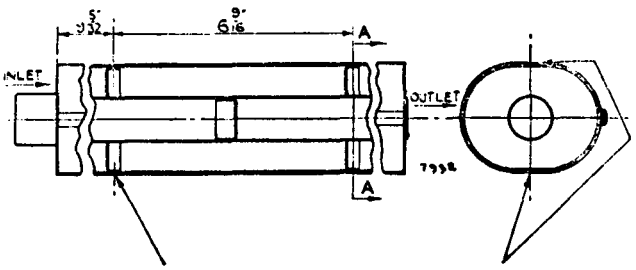

Fig. T.1

Method of securing loose baffles in the silencer

Section T.2

FITTING A NEW-TYPE CHROMIUM GRILLE

In the event of it being necessary to fit a replacement chromium grille to early models with combined head and pilot lamps, certain modifications must be made. These modifications are necessitated by the fact that later models with combined head and pilot lamps were fitted with a modified grille, and this later grille is now issued as replacement in all cases.

The four studs along the top and the two studs on each side of the opening in the front panel must be cut off so that their length does not exceed $\frac{5}{32}$ in. (4 mm.). They must not be strained or broken off because this may cause damage to the surface of the panel. It is most important that the four studs along the bottom of the opening are not removed or cut.

Having carried out this modification, the replacement grille may now be fitted.

Printed by Edson Printers Ltd., Watford, Herts.